www.konkur.in

FIFTH EDITION

Fundamentals of Electric Circuits

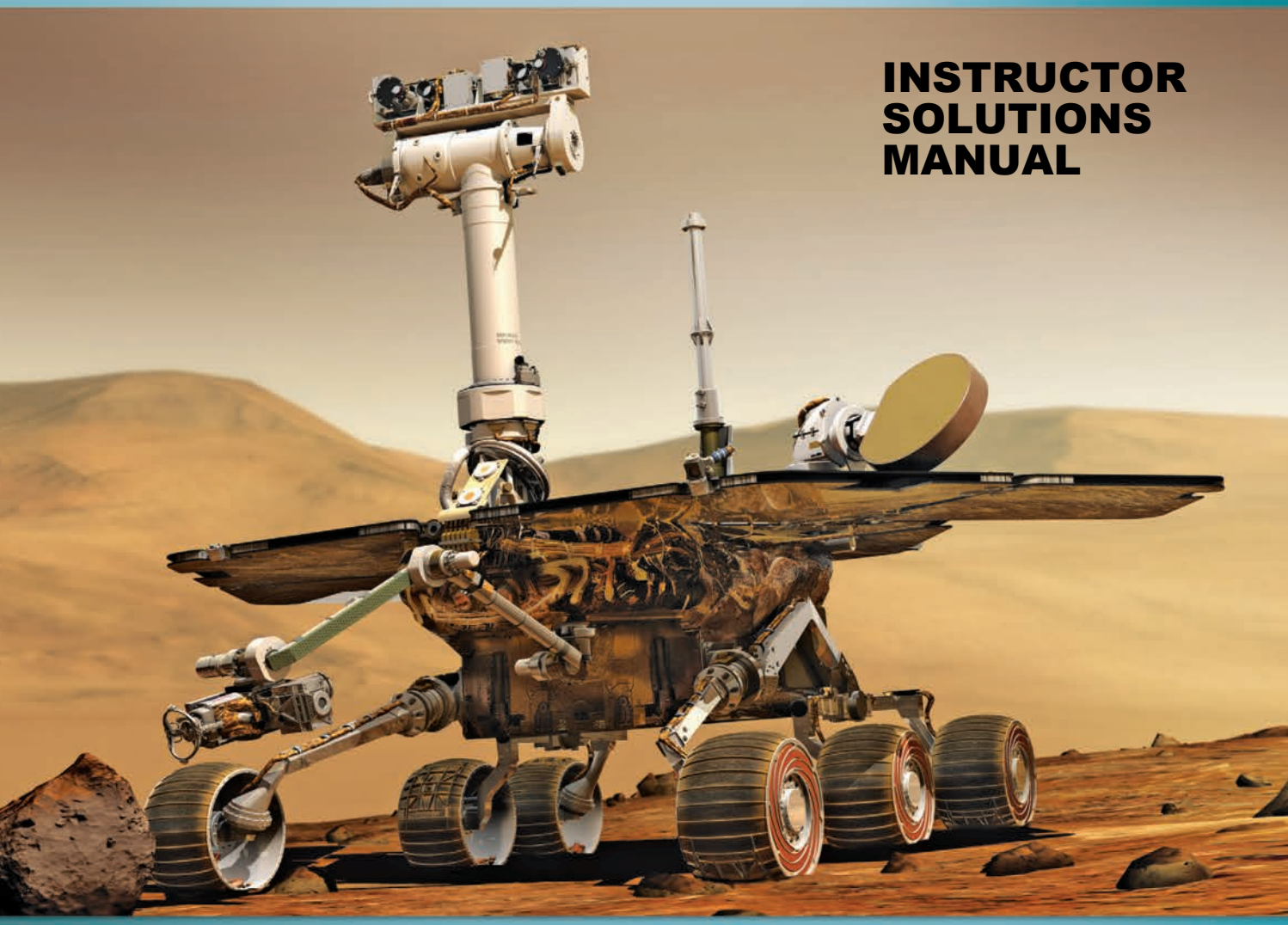

INSTRUCTOR SOLUTIONS MANUAL

Charles K. Alexander | Matthew N. O. Sadiku

www.konkur.in

Chapter 1, Solution 1

(a) $q = 6.482 \times 10^{17} \times [-1.602 \times 10^{-19}\ C] =$ **–103.84 mC**

(b) $q = 1.24 \times 10^{18} \times [-1.602 \times 10^{-19}\ C] =$ **–198.65 mC**

(c) $q = 2.46 \times 10^{19} \times [-1.602 \times 10^{-19}\ C] =$ **–3.941 C**

(d) $q = 1.628 \times 10^{20} \times [-1.602 \times 10^{-19}\ C] =$ **–26.08 C**

www.konkur.in

Chapter 1, Solution 2

(a) i = dq/dt = 3 mA
(b) i = dq/dt = (16t + 4) A
(c) i = dq/dt = $(-3e^{-t} + 10e^{-2t})$ nA
(d) i=dq/dt = $1200\pi \cos 120\pi t$ pA
(e) i =dq/dt = $-e^{-4t}(80\cos 50t + 1000\sin 50t)\ \mu\mathbf{A}$

www.konkur.in

Chapter 1, Solution 3

(a) $q(t) = \int i(t)dt + q(0) = \underline{(3t + 1)\ \ C}$

(b) $q(t) = \int (2t + s)\, dt + q(v) = \underline{(t^2 + 5t)\ \ mC}$

(c) $q(t) = \int 20 \cos\left(10t + \pi/6\right) + q(0) = \underline{(2\sin(10t + \pi/6) + 1)\mu C}$

(d) $$q(t) = \int 10e^{-30t} \sin 40t + q(0) = \frac{10e^{-30t}}{900 + 1600}(-30 \sin 40t - 40 \cos t)$$

$$= \underline{-e^{-30t}(0.16\cos 40\,t + 0.12\ \sin 40t)\ C}$$

www.konkur.in

Chapter 1, Solution 4

q = it = 7.4 x 20 = **148 C**

www.konkur.in

Chapter 1, Solution 5

$$q = \int i dt = \int_0^{10} \frac{1}{2} t dt = \frac{t^2}{4}\Big|_0^{10} = \underline{25\text{ C}}$$

www.konkur.in

Chapter 1, Solution 6

(a) At t = 1ms, $i = \frac{dq}{dt} = \frac{30}{2} =$ **<u>15 A</u>**

(b) At t = 6ms, $i = \frac{dq}{dt} =$ **<u>0 A</u>**

(c) At t = 10ms, $i = \frac{dq}{dt} = \frac{-30}{4} =$ **<u>–7.5 A</u>**

www.konkur.in

Chapter 1, Solution 7

$$i = \frac{dq}{dt} = \begin{cases} 25A, & 0 < t < 2 \\ -25A, & 2 < t < 6 \\ 25A, & 6 < t < 8 \end{cases}$$

which is sketched below:

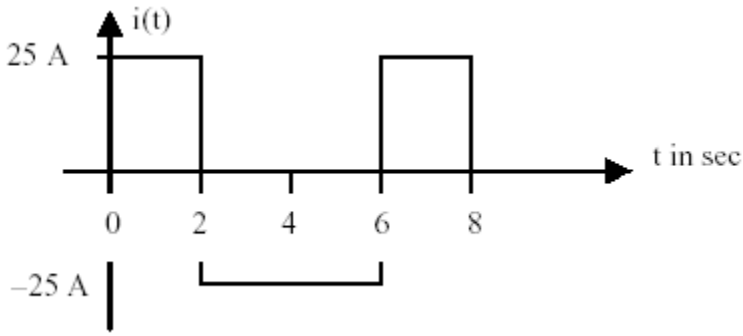

www.konkur.in

Chapter 1, Solution 8

$$q = \int i dt = \frac{10 \times 1}{2} + 10 \times 1 = \underline{15\ \mu C}$$

www.konkur.in

Chapter 1, Solution 9

(a) $q = \int i dt = \int_0^1 10\, dt = \underline{10\ C}$

(b) $q = \int_0^3 i dt = 10 \times 1 + \left(10 - \frac{5 \times 1}{2}\right) + 5 \times 1$

$= 15 + 7.5 + 5 = \underline{22.5C}$

(c) $q = \int_0^5 i dt = 10 + 10 + 10 = \underline{30\ C}$

www.konkur.in

Chapter 1, Solution 10

$q = it = 10x10^{3}x15x10^{-6} =$ **<u>150 mC</u>**

www.konkur.in

Chapter 1, Solution 11

q= it = 90 x10^{-3} x 12 x 60 x 60 = **3.888 kC**

E = pt = ivt = qv = 3888 x1.5 = **5.832 kJ**

www.konkur.in

Chapter 1, Solution 12

For 0 < t < 6s, assuming q(0) = 0,

$$q(t) = \int_0^t i dt + q(0) = \int_0^t 3t dt + 0 = 1.5t^2$$

At t=6, q(6) = $1.5(6)^2$ = 54
For 6 < t < 10s,

$$q(t) = \int_6^t i dt + q(6) = \int_6^t 18 dt + 54 = 18t - 54$$

At t=10, q(10) = 180 – 54 = 126
For 10<t<15s,

$$q(t) = \int_{10}^t i dt + q(10) = \int_{10}^t (-12) dt + 126 = -12t + 246$$

At t=15, q(15) = -12x15 + 246 = 66
For 15<t<20s,

$$q(t) = \int_{15}^t 0 dt + q(15) = 66$$

Thus,

$$q(t) = \begin{cases} 1.5t^2 \ \mathbf{C}, & \mathbf{0 < t < 6s} \\ 18t - 54 \ \mathbf{C}, & \mathbf{6 < t < 10s} \\ -12t + 246 \ \mathbf{C}, & \mathbf{10 < t < 15s} \\ 66 \ \mathbf{C}, & \mathbf{15 < t < 20s} \end{cases}$$

The plot of the charge is shown below.

www.konkur.in

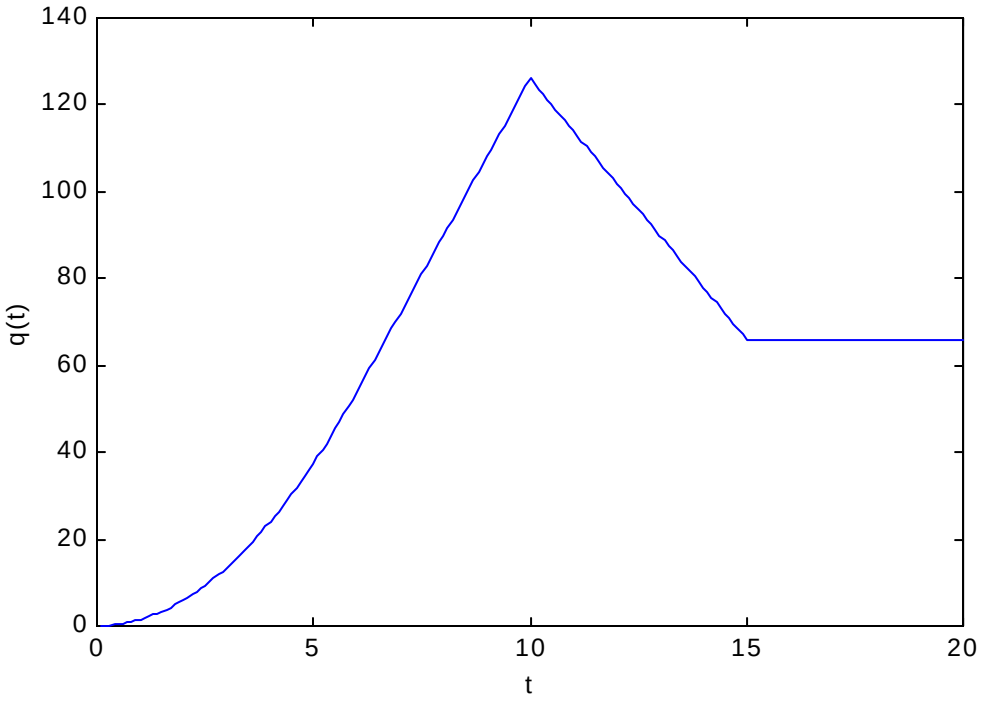

www.konkur.in

Chapter 1, Solution 13

(a) $i = [dq/dt] = 20\pi\cos(4\pi t)$ mA

$p = vi = 60\pi\cos^2(4\pi t)$ mW

At t=0.3s,

$$p = vi = 60\pi\cos^2(4\pi 0.3) \text{ mW} = \mathbf{123.37\ mW}$$

(b) $W = \int p\,dt = 60\pi \int_0^{0.6} \cos^2(4\pi t)\,dt = 30\pi \int_0^{0.6} [1 + \cos(8\pi t)]\,dt$

$$W = 30\pi[0.6+(1/(8\pi))[\sin(8\pi 0.6)-\sin(0)]] = \mathbf{58.76\ mJ}$$

www.konkur.in

Chapter 1, Solution 14

(a) $q = \int i dt = \int_0^1 0.02\left(1 - e^{-0.5t}\right)dt = 0.02\left(t + 2e^{-0.5t}\right)\Big|_0^1 = 0.02\left(1 + 2e^{-0.5} - 2\right) =$ **4.261 mC**

(b) p(t) = v(t)i(t)

p(1) = 10cos(2)x0.02(1–$e^{-0.5}$) = (–4.161)(0.007869)

= **–32.74 mW**

www.konkur.in

Chapter 1, Solution 15

(a) $q = \int i dt = \int_0^2 0.006e^{-2t} dt = \frac{-0.006}{2} e^{2t} \Big|_0^2$

$= -0.003\left(e^{-4} - 1\right) =$

2.945 mC

(b) $v = \frac{10di}{dt} = -0.012e^{-2t}(10) = -0.12e^{-2t}$ V this leads to p(t) = v(t)i(t) =

$(-0.12e^{-2t})(0.006e^{-2t})$ = $\mathbf{-720e^{-4t}\ \mu W}$

(c) $w = \int p dt = -0.72\int_0^3 e^{-4t}\ dt = \frac{-720}{-4} e^{-4t} 10^{-6} \Big|_0^3$ = **–180 μJ**

www.konkur.in

Chapter 1, Solution 16

(a)

$$i(t) = \begin{cases} 30t \text{ mA}, & 0 < t < 2 \\ 120\text{-}30t \text{ mA}, & 2 < t < 4 \end{cases}$$

$$v(t) = \begin{cases} 5 \text{ V}, & 0 < t < 2 \\ -5 \text{ V}, & 2 < t < 4 \end{cases}$$

$$p(t) = \begin{cases} 150t \text{ mW}, & 0 < t < 2 \\ -600+150t \text{ mW}, & 2 < t < 4 \end{cases}$$

which is sketched below.

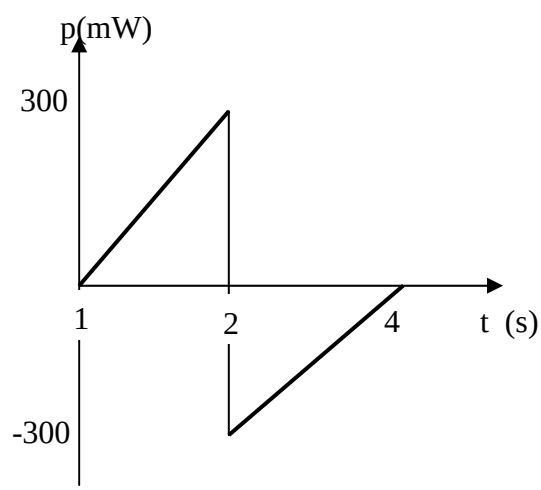

(b) From the graph of p,

$$W = \int_0^4 p\,dt = \underline{0 \text{ J}}$$

www.konkur.in

Chapter 1, Solution 17

Σ p = 0 $\rightarrow$ -205 + 60 + 45 + 30 + p_3 = 0

p_3 = 205 – 135 = 70 W

Thus element 3 receives **70 W.**

www.konkur.in

Chapter 1, Solution 18

$p_1 = 30(-10) =$ **-300 W**
$p_2 = 10(10) =$ **100 W**
$p_3 = 20(14) =$ **280 W**
$p_4 = 8(-4) =$ **-32 W**
$p_5 = 12(-4) =$ **-48 W**

www.konkur.in

Chapter 1, Solution 19

$$I = 8 - 2 = \mathbf{6\ A}$$

Calculating the power absorbed by each element means we need to find vi for each element.

$$p_{8\text{ amp source}} = -8x9 = \mathbf{-72\ W}$$
$$p_{\text{element with 9 volts across it}} = 2x9 = \mathbf{18\ W}$$
$$p_{\text{element with 3 bolts across it}} = 3x6 = \mathbf{18\ W}$$
$$p_{6\text{ volt source}} = 6x6 = \mathbf{36\ W}$$

One check we can use is that the sum of the power absorbed must equal zero which is what it does.

www.konkur.in

Chapter 1, Solution 20

$$p_{30\text{ volt source}} = 30x(-6) = \mathbf{-180\ W}$$
$$p_{12\text{ volt element}} = 12x6 = \mathbf{72\ W}$$
$$p_{28\text{ volt e.ement with 2 amps flowing through it}} = 28x2 = \mathbf{56\ W}$$
$$p_{28\text{ volt element with 1 amp flowing through it}} = 28x1 = \mathbf{28\ W}$$
$$p_{\text{the 5Io dependent source}} = 5x2x(-3) = \mathbf{-30\ W}$$

Since the total power absorbed by all the elements in the circuit must equal zero, or $0 = -180+72+56+28-30+p_{\text{into the element with Vo}}$ or

$$p_{\text{into the element with Vo}} = 180-72-56-28+30 = \mathbf{54\ W}$$

Since $p_{\text{into the element with Vo}} = V_o x3 = 54$ W or $V_o = \mathbf{18\ V}$.

www.konkur.in

Chapter 1, Solution 21

$$p = vi \longrightarrow i = \frac{p}{v} = \frac{60}{120} = 0.5 \text{ A}$$

q = it = 0.5x24x60x60 = **43.2 kC**

$$N_e = qx6.24x10^{18} = \underline{2.696x10^{23} \text{ electrons}}$$

www.konkur.in

Chapter 1, Solution 22

$q = it = 40x10^{3}x1.7x10^{-3} =$ **68 C**

www.konkur.in

Chapter 1, Solution 23

W = pt = 1.8x(15/60) x30 kWh = 13.5kWh
C = 10cents x13.5 = **$1.35**

www.konkur.in

Chapter 1, Solution 24

W = pt = 60 x24 Wh = 0.96 kWh = 1.44 kWh

C = 8.2 centsx0.96 = **11.808 cents**

www.konkur.in

Chapter 1, Solution 25

$$\text{Cost} = 1.5\,\text{kW} \times \frac{3.5}{60}\,\text{hr} \times 30 \times 8.2\ \text{cents/kWh} = \mathbf{21.52\ cents}$$

www.konkur.in

Chapter 1, Solution 26

(a) $i = \dfrac{0.8\text{A} \cdot \text{h}}{10\text{h}} = \mathbf{80\ mA}$

(b) $\text{p} = \text{vi} = 6 \times 0.08 = \mathbf{0.48\ W}$

(c) $\text{w} = \text{pt} = 0.48 \times 10\ \text{Wh} = \mathbf{0.0048\ kWh}$

www.konkur.in

Chapter 1, Solution 27

(a) Let $T = 4h = 4 \times 3600$

$$q = \int i dt = \int_0^T 3dt = 3T = 3 \times 4 \times 3600 = \underline{43.2\ kC}$$

(b) $$W = \int p dt = \int_0^T v i dt = \int_0^T (3)\left(10 + \frac{0.5t}{3600}\right) dt$$

$$= 3\left(10t + \frac{0.25t^2}{3600}\right)\Bigg|_0^{4\times 3600} = 3[40 \times 3600 + 0.25 \times 16 \times 3600]$$

$$= \underline{475.2\ kJ}$$

(c) $W = 475.2\ kWs, \quad (J = Ws)$

$$\text{Cost} = \frac{475.2}{3600} kWh \times 9\ \text{cent} = \underline{1.188\ \text{cents}}$$

www.konkur.in

Chapter 1, Solution 28

(a) $i = \frac{P}{V} = \frac{60}{120}$

= **500 mA**

(b) $W = pt = 60 \times 365 \times 24 \text{ Wh} = 525.6 \text{ kWh}$

$\text{Cost} = \$0.095 \times 525.6$

= **$49.93**

www.konkur.in

Chapter 1, Solution 29

$$w = pt = 1.2\text{kW}\frac{(20+40+15+45)}{60}\text{hr} + 1.8\,\text{kW}\left(\frac{30}{60}\right)\text{hr}$$

$$= 2.4 + 0.9 = 3.3\,\text{kWh}$$

$$\text{Cost} = 12\,\text{cents} \times 3.3 = \underline{39.6\ \text{cents}}$$

www.konkur.in

Chapter 1, Solution 30

Monthly charge = $6

First 250 kWh @ $0.02/kWh = $5

Remaining 2,436–250 kWh = 2,186 kWh @ $0.07/kWh= $153.02

Total = **$164.02**

www.konkur.in

Chapter 1, Solution 31

Total energy consumed = 365(120x4 + 60x8) W
Cost = $0.12x365x960/1000 = **$42.05**

www.konkur.in

Chapter 1, Solution 32

$i = 20\ \mu A$

$q = 15\ C$

$t = q/i = 15/(20x10^{-6}) =$ **$750x10^{3}$ hrs**

www.konkur.in

Chapter 1, Solution 33

$$i = \frac{dq}{dt} \rightarrow q = \int i dt = 2000 \times 3 \times 10^{-3} = \underline{6\,C}$$

www.konkur.in

Chapter 1, Solution 34

(a) Energy = $\sum pt$ = 200 x 6 + 800 x 2 + 200 x 10 + 1200 x 4 + 200 x 2
= **10 kWh**

(b) Average power = 10,000/24 = **416.7 W**

www.konkur.in

Chapter 1, Solution 35

energy = (5x5 + 4x5 + 3x5 + 8x5 + 4x10)/60 = **2.333 MWhr**

www.konkur.in

Chapter 1, Solution 36

(a) $i = \dfrac{160\text{A} \cdot \text{h}}{40} = \underline{4\ \text{A}}$

(b) $t = \dfrac{160\text{Ah}}{0.001\text{A}} = \dfrac{160{,}000\text{h}}{24\text{h / day}} = \underline{6{,}667\ \text{days}}$

www.konkur.in

Chapter 1, Solution 37

W = pt = vit = 12x 40x 60x60 = **1.728 MJ**

www.konkur.in

Chapter 1, Solution 38

P = 10 hp = 7460 W

W = pt = 7460 × 30 × 60 J = $\mathbf{13.43 \times 10^6}$ **J**

www.konkur.in

Chapter 1, Solution 39

W = pt = 600x4 = 2.4 kWh
C = 10cents x2.4 = **24 cents**

www.konkur.in

Chapter 2, Solution 1. Design a problem, complete with a solution, to help students to better understand Ohm's Law. Use at least two resistors and one voltage source. Hint, you could use both resistors at once or one at a time, it is up to you. Be creative.

Although there is no correct way to work this problem, this is an example based on the same kind of problem asked in the third edition.

Problem

The voltage across a 5-kΩ resistor is 16 V. Find the current through the resistor.

Solution

$v = iR$ $\quad$ $i = v/R = (16/5)\text{ mA} = \mathbf{3.2\ mA}$

www.konkur.in

Chapter 2, Solution 2

$p = v^2/R \rightarrow$ **R** $= v^2/p = 14400/60 =$ **240 ohms**

www.konkur.in

Chapter 2, Solution 3

For silicon, $\rho = 6.4x10^2\ \Omega$-m. $A = \pi r^2$. Hence,

$$R = \frac{\rho L}{A} = \frac{\rho L}{\pi r^2} \quad \longrightarrow \quad r^2 = \frac{\rho L}{\pi R} = \frac{6.4x10^2\, x4x10^{-2}}{\pi x240} = 0.033953$$

r = **184.3 mm**

www.konkur.in

Chapter 2, Solution 4

(a) **i** = 40/100 = **400 mA**
(b) **i** = 40/250 = **160 mA**

www.konkur.in

Chapter 2, Solution 5

$n = \mathbf{9}$; $l = \mathbf{7}$; $\mathbf{b} = n + l - 1 = \mathbf{15}$

www.konkur.in

Chapter 2, Solution 6

$n = 12; \quad l = 8; \quad \mathbf{b} = n + l - 1 = \underline{\mathbf{19}}$

www.konkur.in

Chapter 2, Solution 7

6 branches and 4 nodes

www.konkur.in

Chapter 2, Solution 8. Design a problem, complete with a solution, to help other students to better understand Kirchhoff's Current Law. Design the problem by specifying values of i_a, i_b, and i_c, shown in Fig. 2.72, and asking them to solve for values of i_1, i_2, and i_3. Be careful specify realistic currents.

Although there is no correct way to work this problem, this is an example based on the same kind of problem asked in the third edition.

Problem

Use KCL to obtain currents i_1, i_2, and i_3 in the circuit shown in Fig. 2.72.

Solution

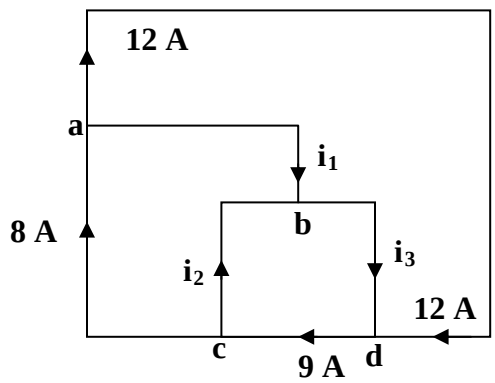

At node a, $8 = 12 + i_1 \longrightarrow$ $\underline{i_1 = -4A}$

At node c, $9 = 8 + i_2 \longrightarrow$ $\underline{i_2 = 1A}$

At node d, $9 = 12 + i_3 \longrightarrow$ $\underline{i_3 = -3A}$

www.konkur.in

Chapter 2, Solution 9

At A, $1+6-i_1 = 0$ or $i_1 = 1+6 =$ **7 A**

At B, $-6+i_2+7 = 0$ or $i_2 = 6-7 =$ **–1 A**

At C, $2+i_3-7 = 0$ or $i_3 = 7-2 =$ **5 A**

www.konkur.in

Chapter 2, Solution 10

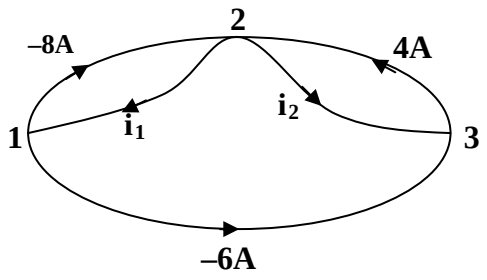

At node 1, $-8-i_1-6 = 0$ or $i_1 = -8-6 =$ **–14 A**

At node 2, $-(-8)+i_1+i_2-4 = 0$ or $i_2 = -8-i_1+4 = -8+14+4 =$ **10 A**

www.konkur.in

Chapter 2, Solution 11

$$-V_1 + 1 + 5 = 0 \quad \longrightarrow \quad V_1 = \underline{6\ \text{V}}$$
$$-5 + 2 + V_2 = 0 \quad \longrightarrow \quad V_2 = \underline{3\ \text{V}}$$

www.konkur.in

Chapter 2, Solution 12

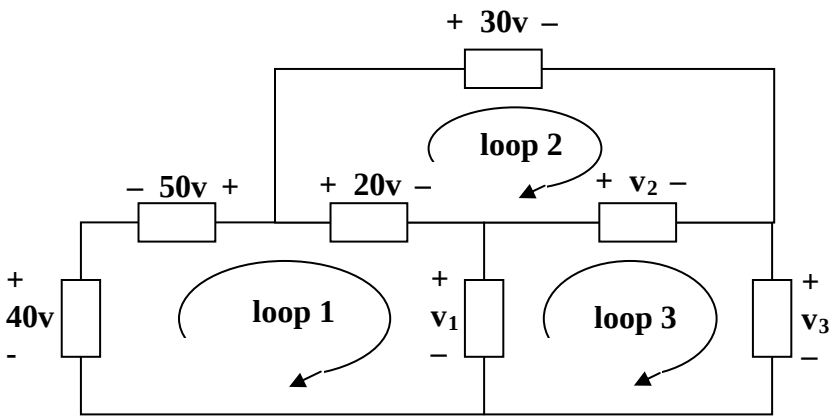

For loop 1, $-40 - 50 + 20 + v_1 = 0$ or $v_1 = 40+50-20 =$ **70 V**

For loop 2, $-20 + 30 - v_2 = 0$ or $v_2 = 30-20 =$ **10 V**

For loop 3, $-v_1 + v_2 + v_3 = 0$ or $v_3 = 70-10 =$ **60 V**

www.konkur.in

Chapter 2, Solution 13

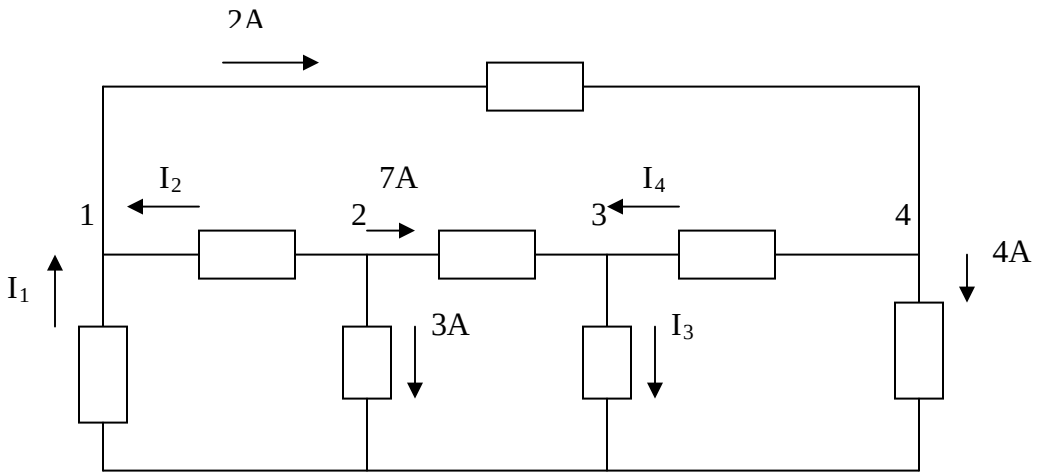

At node 2,

$$3+7+I_2=0 \quad \longrightarrow \quad I_2=-10A$$

At node 1,

$$I_1+I_2=2 \quad \longrightarrow \quad I_1=2-I_2=12A$$

At node 4,

$$2=I_4+4 \quad \longrightarrow \quad I_4=2-4=-2A$$

At node 3,

$$7+I_4=I_3 \quad \longrightarrow \quad I_3=7-2=5A$$

Hence,

$$\underline{I_1=12A, \quad I_2=-10A, \quad I_3=5A, \quad I_4=-2A}$$

www.konkur.in

Chapter 2, Solution 14

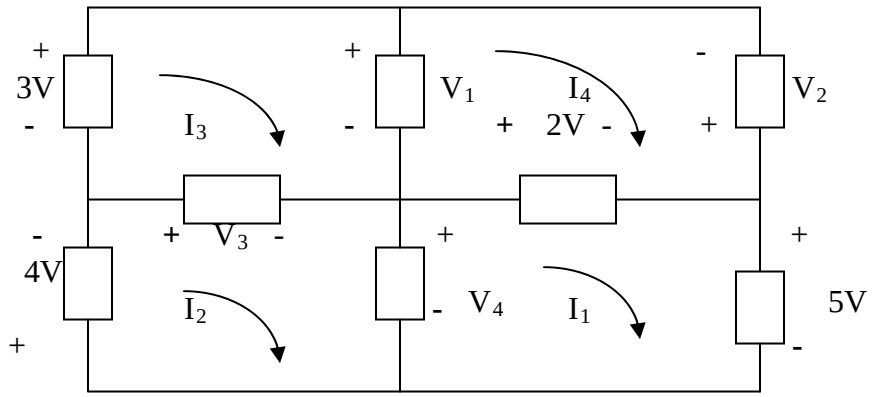

For mesh 1,

$-V_4 + 2 + 5 = 0 \quad \longrightarrow \quad V_4 = 7V$

For mesh 2,

$+4 + V_3 + V_4 = 0 \quad \longrightarrow \quad V_3 = -4 - 7 = -11V$

For mesh 3,

$-3 + V_1 - V_3 = 0 \quad \longrightarrow \quad V_1 = V_3 + 3 = -8V$

For mesh 4,

$-V_1 - V_2 - 2 = 0 \quad \longrightarrow \quad V_2 = -V_1 - 2 = 6V$

Thus,

$\underline{V_1 = -8V, \quad V_2 = 6V, \quad V_3 = -11V, \quad V_4 = 7V}$

www.konkur.in

Chapter 2, Solution 15

Calculate v and i_x in the circuit of Fig. 2.79.

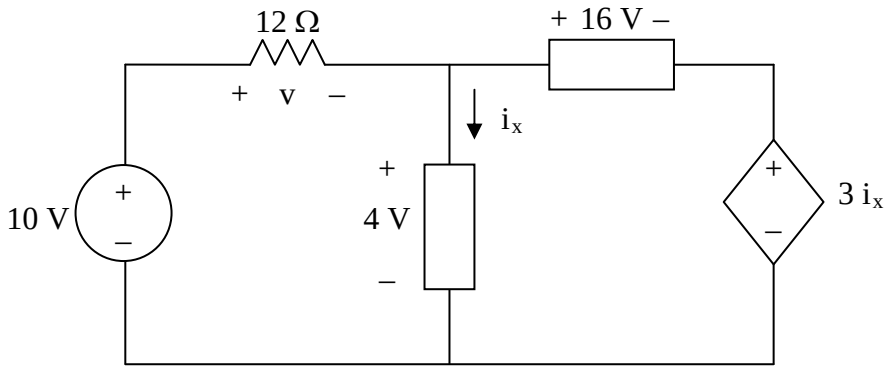

Figure 2.79
For Prob. 2.15.

Solution

For loop 1, –10 + v +4 = 0, v = **6 V**

For loop 2, –4 + 16 + 3i_x =0, i_x = **–4 A**

www.konkur.in

Chapter 2, Solution 16

Determine $\boldsymbol{V_o}$ in the circuit in Fig. 2.80.

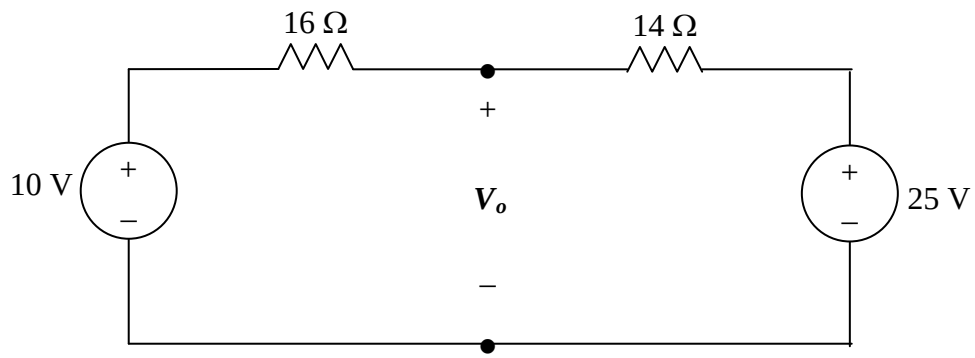

Figure 2.80
For Prob. 2.16.

Solution

Apply KVL,

$$-10 + (16+14)I + 25 = 0 \text{ or } 30I = 10-25 = - \text{ or } I = -15/30 = -500 \text{ mA}$$

Also,

$$-10 + 16I + \boldsymbol{V_o} = 0 \text{ or } \boldsymbol{V_o} = 10 - 16(-0.5) = 10+8 = \mathbf{18\ V}$$

www.konkur.in

Chapter 2, Solution 17

Applying KVL around the entire outside loop we get,

$$-24 + v_1 + 10 + 12 = 0 \text{ or } v_1 = \mathbf{2V}$$

Applying KVL around the loop containing v_2, the 10-volt source, and the 12-volt source we get,

$$v_2 + 10 + 12 = 0 \text{ or } v_2 = \mathbf{-22V}$$

Applying KVL around the loop containing v_3 and the 10-volt source we get,

$$-v_3 + 10 = 0 \text{ or } v_3 = \mathbf{10V}$$

www.konkur.in

Chapter 2, Solution 18

Applying KVL,

$-30 -10 +8 + I(3+5) = 0$

$8I = 32 \longrightarrow I = \underline{\mathbf{4A}}$

$-V_{ab} + 5I + 8 = 0 \longrightarrow V_{ab} = \underline{\mathbf{28V}}$

www.konkur.in

Chapter 2, Solution 19

Applying KVL around the loop, we obtain

$$-(-8) - 12 + 10 + 3i = 0 \longrightarrow \mathbf{i = -2A}$$

Power dissipated by the resistor:

$$p_{3\Omega} = i^2R = 4(3) = \mathbf{12W}$$

Power supplied by the sources:

$$p_{12V} = 12\,((-2)) = \mathbf{-24W}$$

$$p_{10V} = 10\,(-(-2)) = \mathbf{20W}$$

$$p_{8V} = (-8)(-2) = \mathbf{16W}$$

www.konkur.in

Chapter 2, Solution 20

Determine i_o in the circuit of Fig. 2.84.

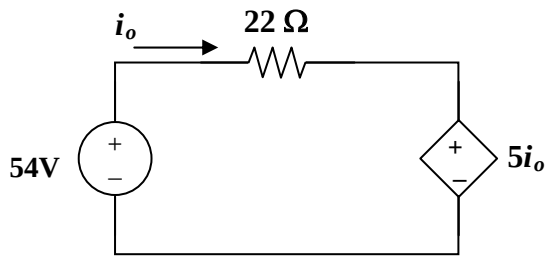

Figure 2.84
For Prob. 2.20

Solution

Applying KVL around the loop,

$$-54 + 22\boldsymbol{i_o} + 5\boldsymbol{i_o} = 0 \longrightarrow \quad \boldsymbol{i_o} = \mathbf{4A}$$

www.konkur.in

Chapter 2, Solution 21

Applying KVL,

$$-15 + (1+5+2)I + 2V_x = 0$$

But $V_x = 5I$,

$$-15 + 8I + 10I = 0, \qquad I = 5/6$$

$$V_x = 5I = 25/6 = \mathbf{4.167\ V}$$

www.konkur.in

Chapter 2, Solution 22

Find $\boldsymbol{V_o}$ in the circuit in Fig. 2.86 and the power absorbed by the dependent source.

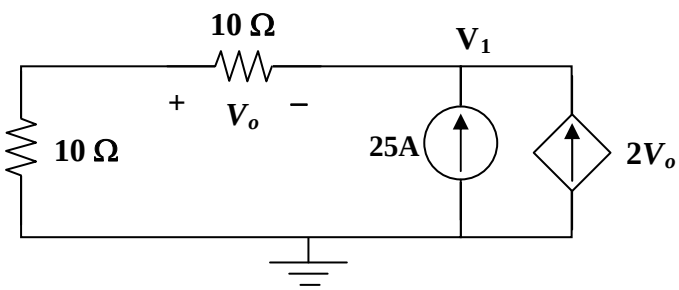

Figure 2.86
For Prob. 2.22

Solution

At the node, KCL requires that $[-V_o/10]+[-25]+[-2V_o] = 0$ or $2.1V_o = -25$

or V_o = **–11.905 V**

The current through the controlled source is $i = 2V_0 = -23.81$ A
and the voltage across it is $V_1 = (10+10)\, i_0$ (where $i_0 = -V_0/10$) = 20(11.905/10) = 23.81 V.

Hence,

$$p_{\text{dependent source}} = V_1(-i) = 23.81\text{x}(-(-23.81)) = \mathbf{566.9\ W}$$

Checking, $(25-23.81)^2(10+10) + (23.81)(-25) + 566.9 = 28.322 - 595.2 + 566.9$ = 0.022 which is equal zero since we are using four places of accuracy!

www.konkur.in

Chapter 2, Solution 23

8//12 = 4.8, 3//6 = 2, (4 + 2)//(1.2 + 4.8) = 6//6 = 3
The circuit is reduced to that shown below.

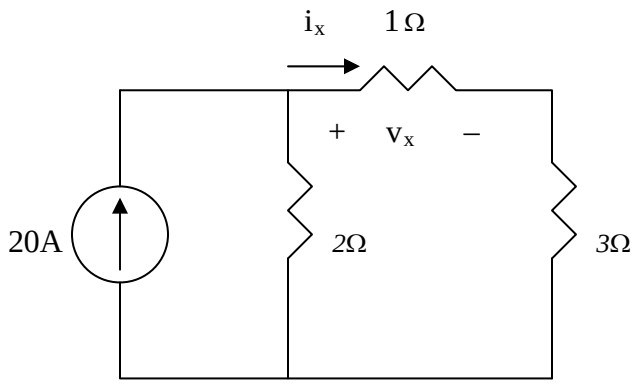

Applying current division,

i_x = [2/(2+1+3)]20 = 6.667 and v_x = 1x6.667 = 6.667 V

$$i_x = \frac{2}{2+1+3}(6\,A) = 2\,A, \qquad v_x = 1 i_x = \underline{2V}$$

The current through the 1.2-Ω resistor is $0.5i_x$ = 3.333 A. The voltage across the 12-Ω resistor is 3.333 x 4.8 = 16V. Hence the power absorbed by the 12-ohm resistor is equal to

$(16)^2/12$ = **21.33 W**

www.konkur.in

Chapter 2, Solution 24

(a) $$I_0 = \frac{V_s}{R_1 + R_2}$$

$$V_0 = -\alpha I_0 \left(R_3 \| R_4\right) = -\frac{\alpha V_s}{R_1 + R_2} \cdot \frac{R_3 R_4}{R_3 + R_4}$$

$$\boldsymbol{\frac{V_0}{Vs} = \frac{-\alpha R_3 R_4}{(R_1 + R_2)(R_3 + R_4)}}$$

(b) If $R_1 = R_2 = R_3 = R_4 = R$,

$$\left|\frac{V_0}{V_S}\right| = \frac{\alpha}{2R} \cdot \frac{R}{2} = \frac{\alpha}{4} = 10 \longrightarrow \alpha = \mathbf{40}$$

www.konkur.in

Chapter 2, Solution 25

$$V_0 = 5 \text{ x } 10^{-3} \text{ x } 10 \text{ x } 10^3 = 50V$$

Using current division,

$$I_{20} = \frac{5}{5+20}(0.01x50) = \mathbf{0.1\ A}$$

$$V_{20} = 20 \text{ x } 0.1 \text{ kV} = \mathbf{2\ kV}$$

$$p_{20} = I_{20}\, V_{20} = \mathbf{0.2\ kW}$$

www.konkur.in

Chapter 2, Problem 26.

For the circuit in Fig. 2.90, $\boldsymbol{i_o}$ = 3 A. Calculate $\boldsymbol{i_x}$ and the total power absorbed by the entire circuit.

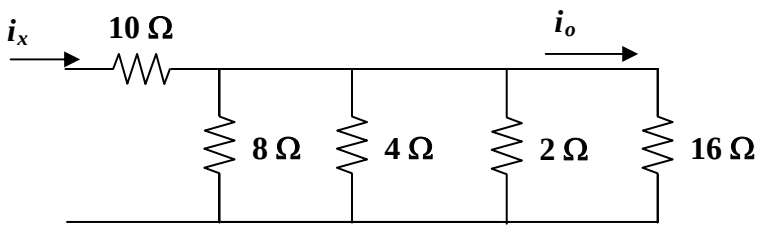

Figure 2.90
For Prob. 2.26.

Solution

If $i_{16} = \boldsymbol{i_o}$ = 3A, then v = 16x3 = 48 V and i_8 = 48/8 = 6A; i_4 = 48/4 = 12A; and i_2 = 48/2 = 24A.

Thus,

$$\boldsymbol{i_x} = i_8 + i_4 + i_2 + i_{16} = 6 + 12 + 24 + 3 = \mathbf{45\ A}$$

$$p = (45)^2 10 + (6)^2 8 + (12)^2 4 + (24)^2 2 + (3)^2 16 = 20{,}250 + 288 + 576 + 1152 + 144$$

$$= 20250 + 2106 = \mathbf{22.356\ kW}.$$

www.konkur.in

Chapter 2, Problem 27.

Calculate $\boldsymbol{I_o}$ in the circuit of Fig. 2.91.

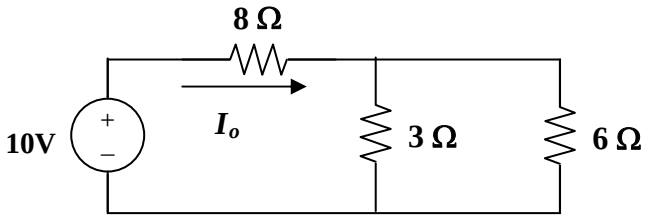

Figure 2.91
For Prob. 2.27.

Solution

The 3-ohm resistor is in parallel with the c-ohm resistor and can be replaced by a [(3x6)/(3+6)] = 2-ohm resistor. Therefore,

$$\boldsymbol{I_o} = 10/(8+2) = \mathbf{1\ A}.$$

www.konkur.in

Chapter 2, Solution 28 Design a problem, using Fig. 2.92, to help other students better understand series and parallel circuits.

Although there is no correct way to work this problem, this is an example based on the same kind of problem asked in the third edition.

Problem

Find v_1, v_2, and v_3 in the circuit in Fig. 2.92.

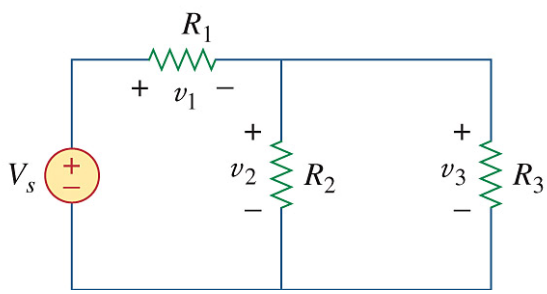

Solution

We first combine the two resistors in parallel

$$15 \| 10 = 6\ \Omega$$

We now apply voltage division,

$$v_1 = \frac{14}{14+6}(40) = \underline{\mathbf{28\ V}}$$

$$v_2 = v_3 = \frac{6}{14+6}(40) = 12\ \text{V}$$

Hence, v_1 = **28 V**, v_2 = **12 V,** v_s = **12 V**

www.konkur.in

Chapter 2, Solution 29

All resistors in Fig. 2.93 are 5 Ω each. Find R_{eq}.

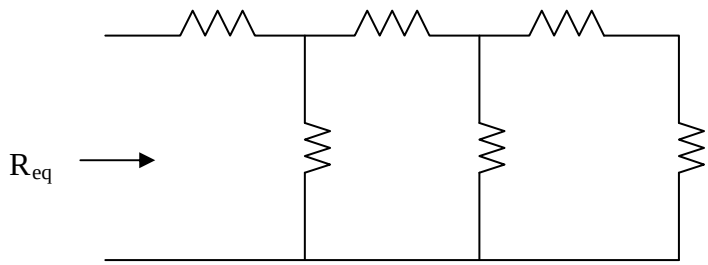

Figure 2.93
For Prob. 2.29.

Solution

R_{eq} = 5 + 5||[5+5||(5+5)] = 5 + 5||[5+(5x10/(5+10))] = 5+5||(5+3.333) = 5 + 41.66/13.333

= **8.125 Ω**

www.konkur.in

Chapter 2, Problem 30.

Find $\boldsymbol{R_{eq}}$ for the circuit in Fig. 2.94.

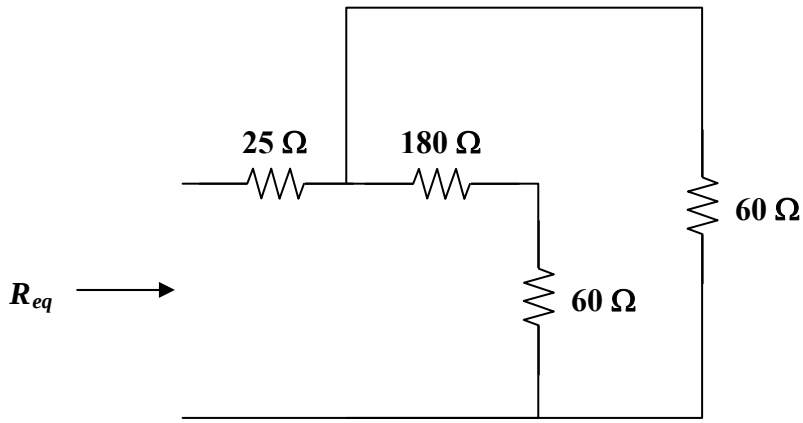

Figure 2.94
For Prob. 2.30.

Solution

We start by combining the 180-ohm resistor with the 60-ohm resistor which in turn is in parallel with the 60-ohm resistor or = [60(180+60)/(60+180+60)] = 48.

Thus,

$$R_{eq} = 25+48 = \mathbf{73\ \Omega}.$$

www.konkur.in

Chapter 2, Solution 31

$$R_{eq} = 3 + 2 // 4 // 1 = 3 + \frac{1}{1/2 + 1/4 + 1} = 3.5714$$

i_1 = 200/3.5714 = **56 A**

v_1 = 0.5714xi_1 = 32 V and i_2 = 32/4 = **8 A**

i_4 = 32/1 = **32 A**; i_5 = 32/2 = **16 A**; and i_3 = 32+16 = **48 A**

www.konkur.in

Chapter 2, Solution 32

Find $\boldsymbol{i_1}$ through $\boldsymbol{i_4}$ in the circuit in Fig. 2.96.

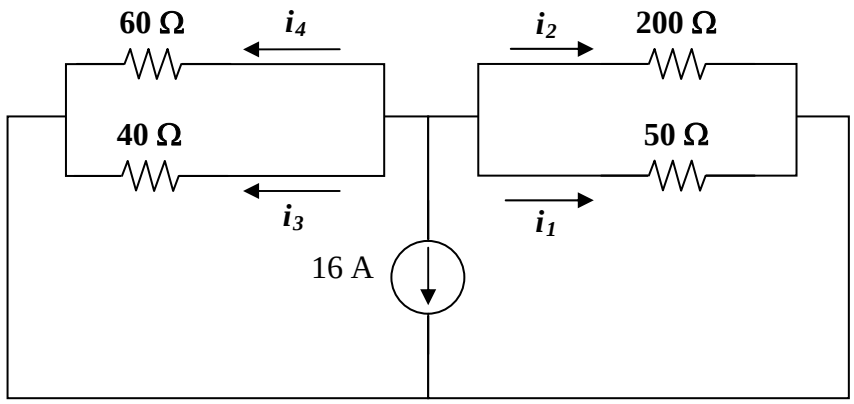

Figure 2.96
For Prob. 2.32.

Solution

We first combine resistors in parallel.

$$40\|60 = \frac{40x60}{100} = 24\ \Omega \text{ and } \quad 50\|200 = \frac{50x200}{250} = 40\ \Omega$$

Using current division principle,

$$i_1 + i_2 = \frac{24}{24+40}(-16) = -6A, i_3 + i_4 = \frac{40}{64}(-16) = -10A$$

$$i_1 = \frac{200}{250}(6) = \mathbf{-4.8\ A} \text{ and } i_2 = \frac{50}{250}(-6) = \mathbf{-1.2\ A}$$

$$i_3 = \frac{60}{100}(-10) = \mathbf{-6\ A} \text{ and } i_4 = \frac{40}{100}(-10) = \mathbf{-4\ A}$$

www.konkur.in

Chapter 2, Solution 33

Combining the conductance leads to the equivalent circuit below

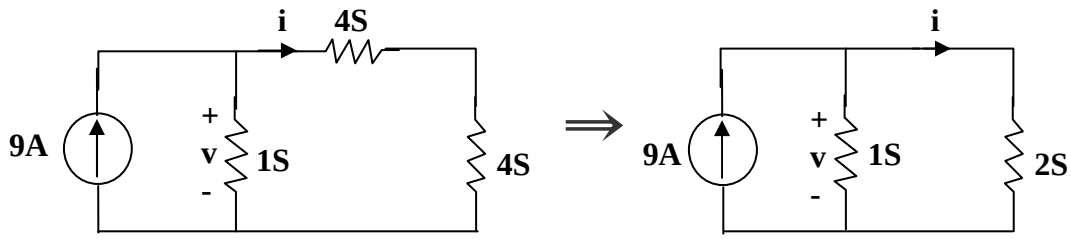

$$6S \| 3S = \frac{6x3}{9} = 2S \text{ and } 2S + 2S = 4S$$

Using current division,

$$i = \frac{1}{1+\frac{1}{2}}(9) = \mathbf{6\ A}, \ v = 3(1) = \mathbf{3\ V}$$

www.konkur.in

Chapter 2, Solution 34

160//(60 + 80 + 20)= 80 Ω,
160//(28+80 + 52) = 80 Ω

$\boldsymbol{R_{eq}}$ = 20+80 = **100 Ω**

I = 200/100 = 2 A or p = VI = 200x2 = **400 W**.

www.konkur.in

Chapter 2, Solution 35

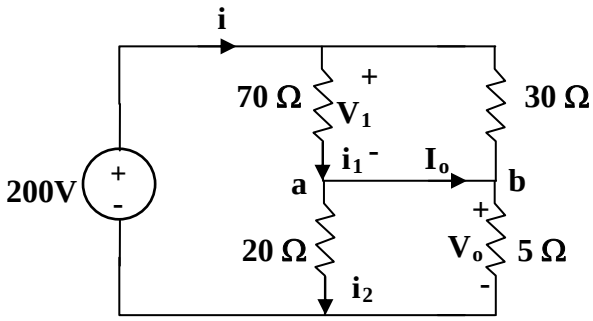

Combining the resistors that are in parallel,

$$70\|30 = \frac{70x30}{100} = 21\Omega\ , \qquad 20\|5 = \frac{20x5}{25} = 4\ \Omega$$

$$i = \frac{200}{21+4} = 8\ A$$

$v_1 = 21i = 168$ V, $v_o = 4i = 32$ V

$i_1 = \frac{v_1}{70} = 2.4$ A, $i_2 = \frac{v_o}{20} = 1.6$ A

At node a, KCL must be satisfied

$$i_1 = i_2 + I_o \longrightarrow 2.4 = 1.6 + I_o \longrightarrow I_o = 0.8\ A$$

Hence,

v_o = **32 V** and I_o = **800 mA**

www.konkur.in

Chapter 2, Solution 36

$20//(30+50) = 16,\ \ 24 + 16 = 40,\ \ \ 60//20\ =\ 15$
$R_{eq} = 80+(15+25)40 = 80+20 = 100\ \Omega$

$i = 20/100 = 0.2$ A

If i_1 is the current through the 24-Ω resistor and i_o is the current through the 50-Ω resistor, using current division gives

$i_1 = [40/(40+40)]0.2 = 0.1$ and $i_o = [20/(20+80)]0.1 = 0.02$ A or

$v_o = 30i_o = 30x0.02 =$ **600 mV**.

www.konkur.in

Chapter 2, Solution 37

Applying KVL,

$$-20 + 10 + 10I - 30 = 0, \quad I = 4$$

$$10 = RI \quad \longrightarrow \quad R = \frac{10}{I} = \underline{2.5\ \Omega}$$

www.konkur.in

Chapter 2, Solution 38

20//80 = 80x20/100 = 16, 6//12 = 6x12/18 = 4
The circuit is reduced to that shown below.

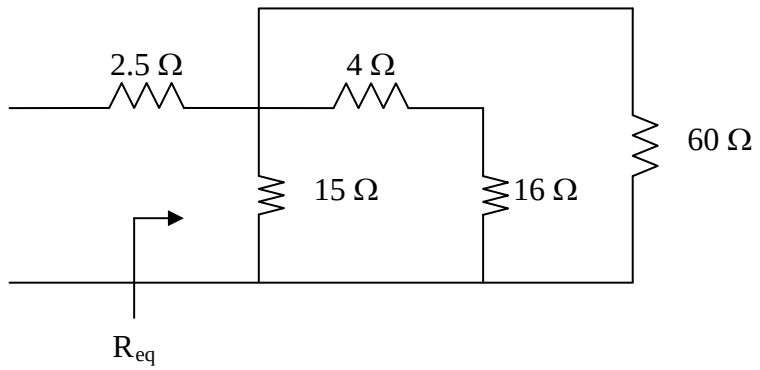

(4 + 16)//60 = 20x60/80 = 15

R_{eq} = 2.5+15||15 = 2.5+7.5 = **10 Ω** and

i_o = 35/10 = **3.5 A**.

www.konkur.in

Chapter 2, Solution 39

(a) We note that the top 2k-ohm resistor is actually in parallel with the first 1k-ohm resistor. This can be replaced (2/3)k-ohm resistor. This is now in series with the second 2k-ohm resistor which produces a 2.667k-ohm resistor which is now in parallel with the second 1k-ohm resistor. This now leads to,

$$R_{eq} = [(1x2.667)/3.667]k = \mathbf{727.3\ \Omega}.$$

(b) We note that the two 12k-ohm resistors are in parallel producing a 6k-ohm resistor. This is in series with the 6k-ohm resistor which results in a 12k-ohm resistor which is in parallel with the 4k-ohm resistor producing,

$$R_{eq} = [(4x12)/16]k = \mathbf{3\ k\Omega}.$$

www.konkur.in

Chapter 2, Solution 40

$$\text{Req} = 8 + 4 \| (2 + 6 \| 3) = 8 + 2 = \mathbf{10\ \Omega}$$

$$I = \frac{15}{R_{eq}} = \frac{15}{10} = \mathbf{1.5\ A}$$

www.konkur.in

Chapter 2, Solution 41

Let R_0 = combination of three 12Ω resistors in parallel

$$\frac{1}{R_o} = \frac{1}{12} + \frac{1}{12} + \frac{1}{12} \longrightarrow R_o = 4$$

$$R_{eq} = 30 + 60 \| (10 + R_0 + R) = 30 + 60 \| (14 + R)$$

$$50 = 30 + \frac{60(14 + R)}{74 + R} \longrightarrow 74 + R = 42 + 3R$$

or R = **16 Ω**

www.konkur.in

Chapter 2, Solution 42

(a) $R_{ab} = 5 \| (8 + 20 \| 30) = 5 \| (8 + 12) = \dfrac{5x20}{25} = \mathbf{4\ \Omega}$

(b) $R_{ab} = 2 + 4 \| (5 + 3) \| 8 + 5 \| 10 \| 4 = 2 + 4 \| 4 + 5 \| 2.857 = 2 + 2 + 1.8181 = \mathbf{5.818\ \Omega}$

www.konkur.in

Chapter 2, Solution 43

(a) $R_{ab} = 5 \| 20 + 10 \| 40 = \frac{5x20}{25} + \frac{400}{50} = 4 + 8 =$ **12 Ω**

(b) $60 \| 20 \| 30 = \left(\frac{1}{60} + \frac{1}{20} + \frac{1}{30} \right)^{-1} = \frac{60}{6} = 10\Omega$

$R_{ab} = 80 \| (10 + 10) = \frac{80 + 20}{100} =$ **16 Ω**

www.konkur.in

Chapter 2, Solution 44

For the circuits in Fig. 2.108, obtain the equivalent resistance at terminals *a-b*.

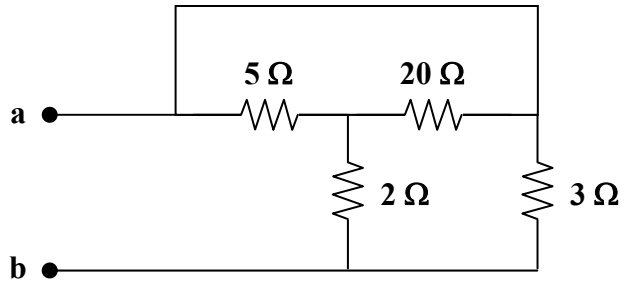

Figure 2.108
For Prob. 2.44

Solution

First we note that the 5 Ω and 20 Ω resistors are in parallel and can be replaced by a 4 Ω [(5x20)/(5+20)] resistor which in now in series with the 2 Ω resistor and can be replaced by a 6 Ω resistor in parallel with the 3 Ω resistor thus,

$$R_{ab} = [(6x3)/(6+3)] = \mathbf{2\ \Omega}.$$

www.konkur.in

Chapter 2, Solution 45

(a) 10//40 = 8, 20//30 = 12, 8//12 = 4.8

$$R_{ab} = 5 + 50 + 4.8 = \underline{59.8\Omega}$$

(b) 12 and 60 ohm resistors are in parallel. Hence, 12//60 = 10 ohm. This 10 ohm and 20 ohm are in series to give 30 ohm. This is in parallel with 30 ohm to give 30//30 = 15 ohm. And 25//(15+10) = 12.5. Thus,

$$R_{ab} = 5 + 12.8 + 15 = \underline{32.5\Omega}$$

www.konkur.in

Chapter 2, Solution 46

$R_{eq} = 12 + 5||20 + [1/((1/15)+(1/15)+(1/15))] + 5 + 24||8$
$= 12 + 4 + 5 + 5 + 6 = 32\ \Omega$

$I = 80/32 =$ **2.5 A**

www.konkur.in

Chapter 2, Solution 47

$$5\|20 = \frac{5x20}{25} = 4\Omega$$

$$6\|3 = \frac{6x3}{9} = 2\Omega$$

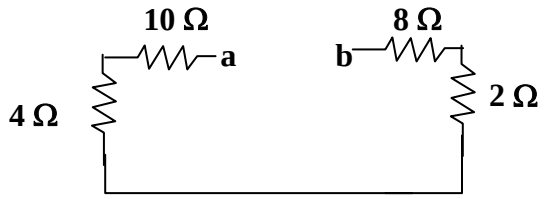

R_{ab} = 10 + 4 + 2 + 8 = **24 Ω**

www.konkur.in

Chapter 2, Solution 48

(a) $$R_a = \frac{R_1R_2 + R_2R_3 + R_3R_1}{R_3} = \frac{100+100+100}{10} = 30$$

$R_a = R_b = R_c =$ **30 Ω**

(b) $$R_a = \frac{30x20 + 30x50 + 20x50}{30} = \frac{3100}{30} = 103.3\Omega$$

$$R_b = \frac{3100}{20} = 155\Omega, \quad R_c = \frac{3100}{50} = 62\Omega$$

$R_a =$ **103.3 Ω**, $R_b =$ **155 Ω**, $R_c =$ **62 Ω**

www.konkur.in

Chapter 2, Solution 49

(a) $$R_1 = \frac{R_a R_c}{R_a + R_b + R_c} = \frac{12*12}{36} = 4\Omega$$

$$R_1 = R_2 = R_3 = \mathbf{4\ \Omega}$$

(b) $$R_1 = \frac{60x30}{60+30+10} = 18\Omega$$

$$R_2 = \frac{60x10}{100} = 6\Omega$$

$$R_3 = \frac{30x10}{100} = 3\Omega$$

$$\mathbf{R_1 = 18\Omega,\ R_2 = 6\Omega,\ R_3 = 3\Omega}$$

www.konkur.in

2.50 Design a problem to help other students better understand wye-delta transformations using Fig. 2.114.

Although there is no correct way to work this problem, this is an example based on the same kind of problem asked in the third edition.

Problem

What value of *R* in the circuit of Fig. 2.114 would cause the current source to deliver 800 mW to the resistors.

Solution

Using $R_\Delta = 3R_Y = 3R$, we obtain the equivalent circuit shown below:

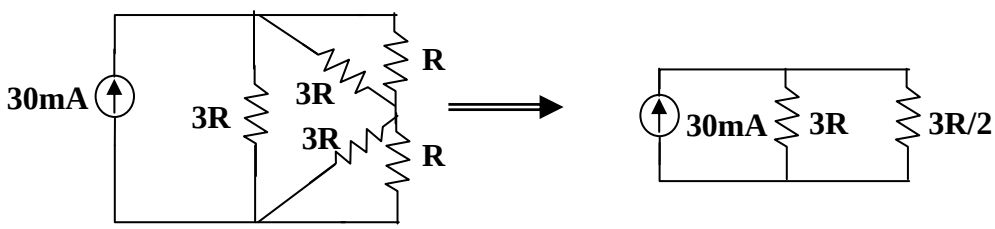

$$3R \| R = \frac{3R x R}{4R} = \frac{3}{4}R$$

$$3R \left\| \left(\frac{3}{4}R + \frac{3}{4}R \right) \right. = 3R \left\| \frac{3}{2}R \right. = \frac{3R x \frac{3}{2}R}{3R + \frac{3}{2}R} = R$$

$$P = I^2R \longrightarrow 800 \times 10^{-3} = (30 \times 10^{-3})^2 R$$

R = **<u>889 Ω</u>**

www.konkur.in

Chapter 2, Solution 51

(a) $30\|30 = 15\Omega$ and $30\|20 = 30x20/(50) = 12\Omega$

R_{ab} = $15\|(12+12) = 15x24/(39) =$ **9.231 Ω**

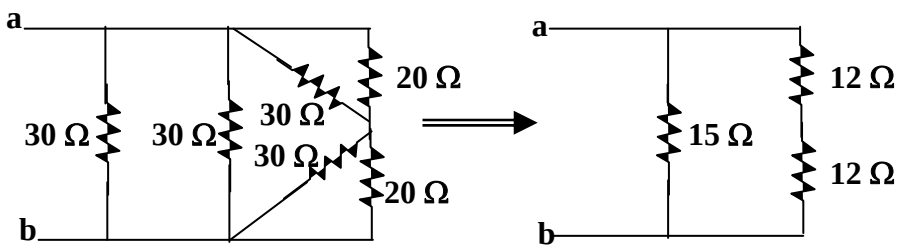

(b) Converting the T-subnetwork into its equivalent Δ network gives

$R_{a'b'}$ = 10x20 + 20x5 + 5x10/(5) = 350/(5) = 70 Ω
$R_{b'c'}$ = 350/(10) = 35Ω, Ra'c' = 350/(20) = 17.5 Ω

Also $30\|70 = 30x70/(100) = 21\Omega$ and 35/(15) = 35x15/(50) = 10.5

R_{ab} = 25 + $17.5\|(21+10.5) = 25+17.5\|31.5$

R_{ab} = **36.25 Ω**

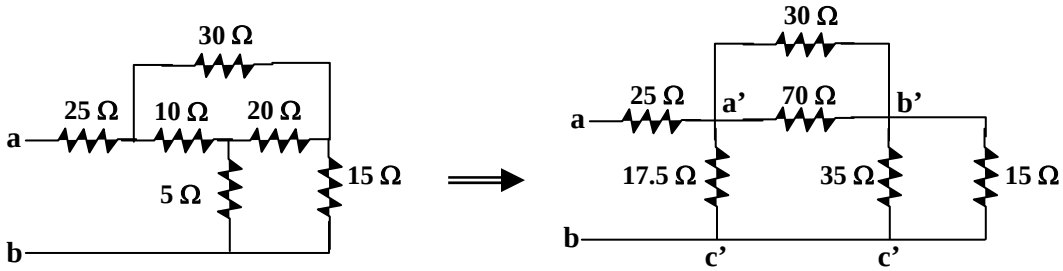

www.konkur.in

Chapter 2, Solution 52

Converting the wye-subnetwork to delta-subnetwork, we obtain the circuit below.

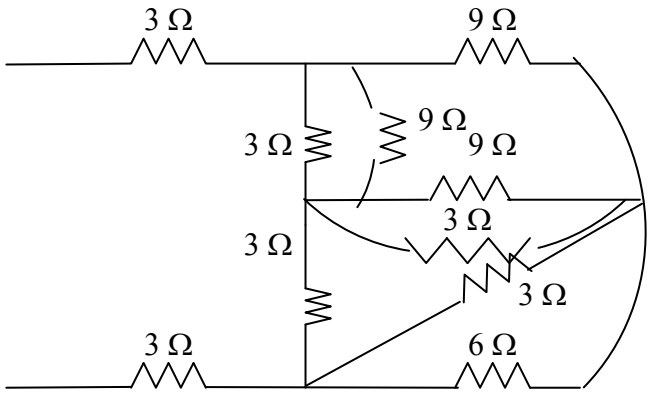

3//1 = 3x1/4 = 0.75, 2//1 =2x1/3 = 0.6667. Combining these resistances leads to the circuit below.

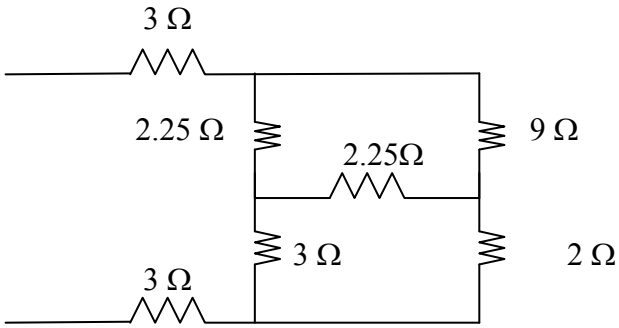

We now convert the wye-subnetwork to the delta-subnetwork.

$R_a = [(2.25x3+2.25x3+2.25x2.25)/3] = 6.188\ \Omega$

$R_b = R_c = 18.562/2.25 = 8.25\ \Omega$

This leads to the circuit below.

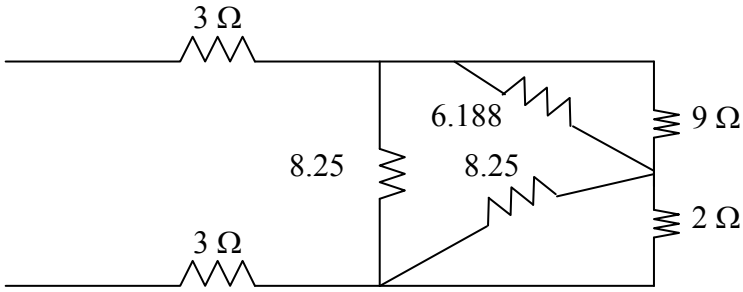

www.konkur.in

$R = 9||6.188+8.25||2 = 3.667+1.6098 = 5.277$

$R_{eq} = 3+3+8.25||5.277 =$ **9.218 Ω**.

www.konkur.in

Chapter 2, Solution 53

(a) Converting one Δ to T yields the equivalent circuit below:

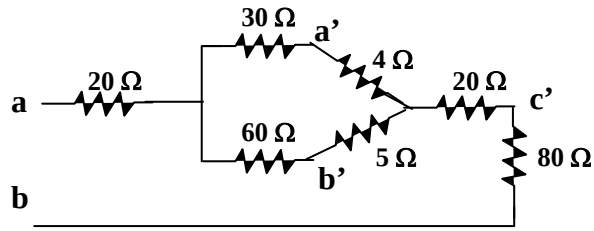

$$R_{a'n} = \frac{40x10}{40+10+50} = 4\Omega, \quad R_{b'n} = \frac{10x50}{100} = 5\Omega, \quad R_{c'n} = \frac{40x50}{100} = 20\Omega$$

$$R_{ab} = 20 + 80 + 20 + (30+4)\|(60+5) = 120 + 34\|65$$

$$R_{ab} = \mathbf{142.32\ \Omega}$$

(b) We combine the resistor in series and in parallel.

$$30\|(30+30) = \frac{30x60}{90} = 20\Omega$$

We convert the balanced Δs to Ts as shown below:

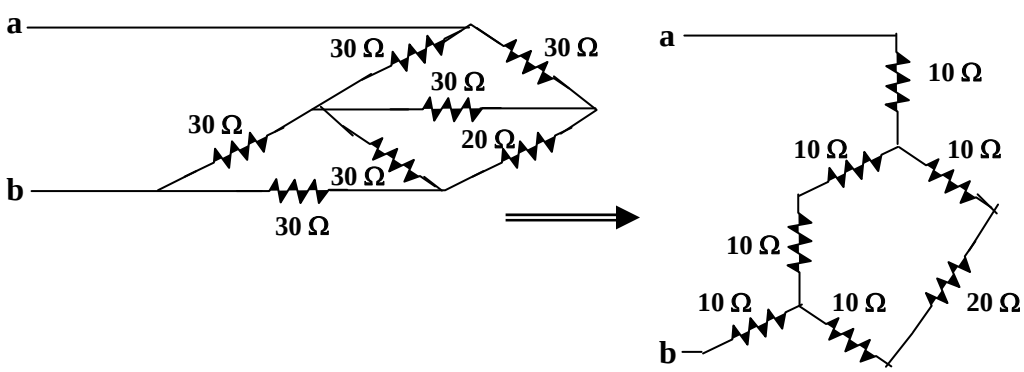

$$R_{ab} = 10 + (10+10)\|(10+20+10) + 10 = 20 + 20\|40$$

$$\mathbf{R_{ab} = 33.33\ \Omega}$$

www.konkur.in

Chapter 2, Solution 54

(a) $R_{ab} = 50 + 100 // (150 + 100 + 150) = 50 + 100 // 400 = \underline{130\Omega}$

(b) $R_{ab} = 60 + 100 // (150 + 100 + 150) = 60 + 100 // 400 = \underline{140\Omega}$

www.konkur.in

Chapter 2, Solution 55

We convert the T to Δ.

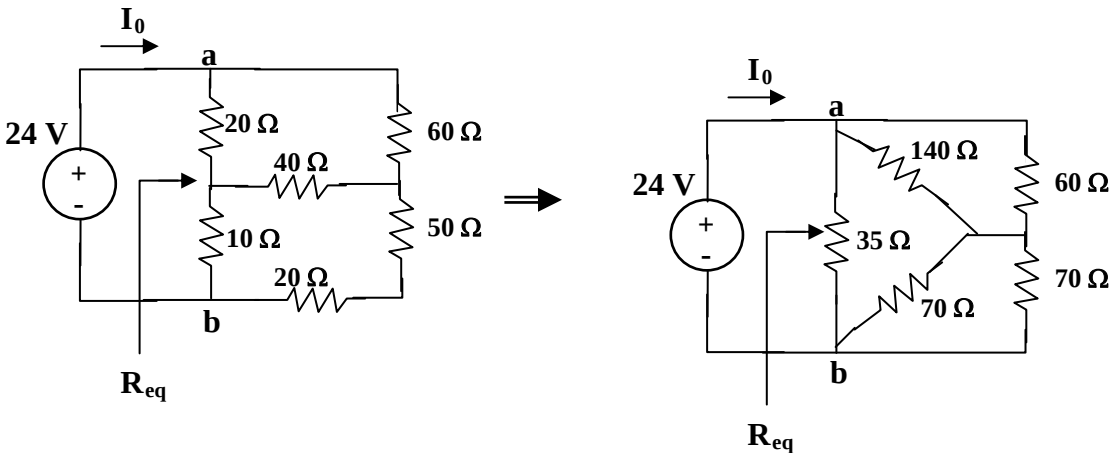

$$R_{ab} = \frac{R_1R_2 + R_2R_3 + R_3R_1}{R_3} = \frac{20x40 + 40x10 + 10x20}{40} = \frac{1400}{40} = 35\Omega$$

R_{ac} = 1400/(10) = 140Ω, R_{bc} = 1400/(20) = 70Ω

$70\|70 = 35$ and $140\|160 =$ 140x60/(200) = 42

$R_{eq} = 35\|(35+42) = 24.0625\Omega$

I_0 = 24/(R_{ab}) = **997.4mA**

www.konkur.in

Chapter 2, Solution 56

We need to find R_{eq} and apply voltage division. We first tranform the Y network to Δ.

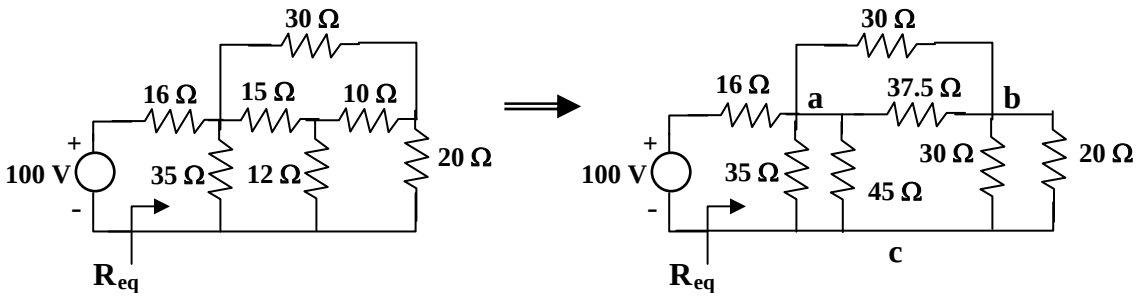

$$R_{ab} = \frac{15x10 + 10x12 + 12x15}{12} = \frac{450}{12} = 37.5\Omega$$

R_{ac} = 450/(10) = 45Ω, R_{bc} = 450/(15) = 30Ω

Combining the resistors in parallel,

$$30||20 = (600/50) = 12\ \Omega,$$

$$37.5||30 = (37.5x30/67.5) = 16.667\ \Omega$$

$$35||45 = (35x45/80) = 19.688\ \Omega$$

$$R_{eq} = 19.688||(12 + 16.667) = 11.672\Omega$$

By voltage division,

$$v = \frac{11.672}{11.672 + 16}100 = \underline{\mathbf{42.18\ V}}$$

Chapter 2, Solution 57

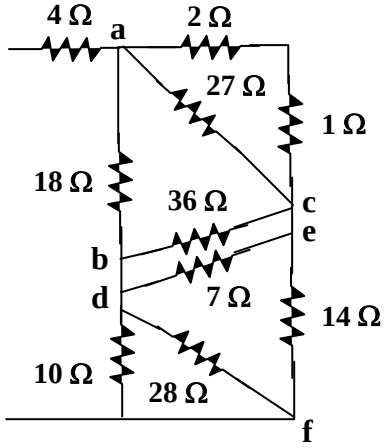

$$R_{ab} = \frac{6x12 + 12x8 + 8x6}{12} = \frac{216}{12} = 18\ \Omega$$

R_{ac} = 216/(8) = 27Ω, R_{bc} = 36 Ω

$$R_{de} = \frac{4x2 + 2x8 + 8x4}{8} = \frac{56}{8} 7\ \Omega$$

R_{ef} = 56/(4) = 14Ω, R_{df} = 56/(2) = 28 Ω

Combining resistors in parallel,

$$10\|28 = \frac{280}{38} = 7.368\Omega,\ \ 36\|7 = \frac{36x7}{43} = 5.868\Omega$$

$$27\|3 = \frac{27x3}{30} = 2.7\Omega$$

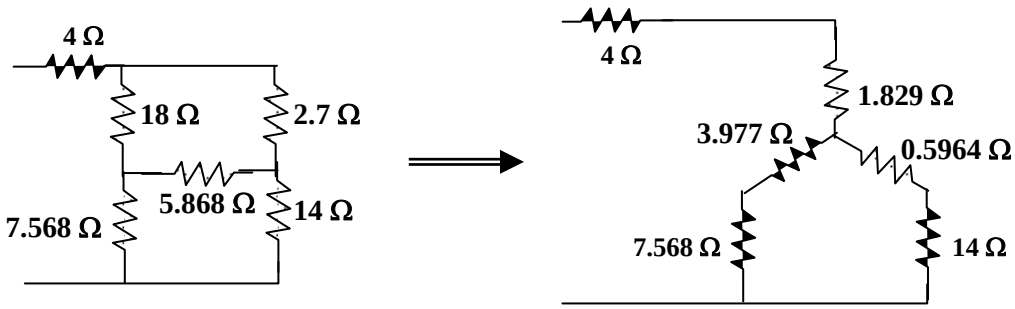

$$R_{an} = \frac{18x2.7}{18 + 2.7 + 5.867} = \frac{18x2.7}{26.567} = 1.829\ \Omega$$

$$R_{bn} = \frac{18x5.868}{26.567} = 3.977\ \Omega$$

$$R_{cn} = \frac{5.868x2.7}{26.567} = 0.5904\ \Omega$$

www.konkur.in

$$R_{eq} = 4 + 1.829 + (3.977 + 7.368) \| (0.5964 + 14)$$

$$= 5.829 + 11.346 \| 14.5964 = \mathbf{12.21\ \Omega}$$

$i = 20/(R_{eq}) =$ **1.64 A**

www.konkur.in

Chapter 2, Solution 58

The resistance of the bulb is $(120)^2/60 = 240\Omega$

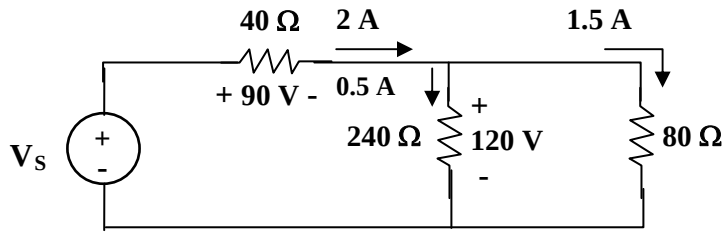

Once the 160Ω and 80Ω resistors are in parallel, they have the same voltage 120V. Hence the current through the 40Ω resistor is equal to 2 amps.

$$40(0.5 + 1.5) = 80 \text{ volts.}$$

Thus

$$v_s = 80 + 120 = \mathbf{200\ V}.$$

www.konkur.in

Chapter 2, Solution 59

Three light bulbs are connected in series to a 120-V source as shown in Fig. 2.123. Find the current *I* through each of the bulbs. Each bulb is rated at 120 volts. How much power is each bulb absorbing? Do they generate much light?

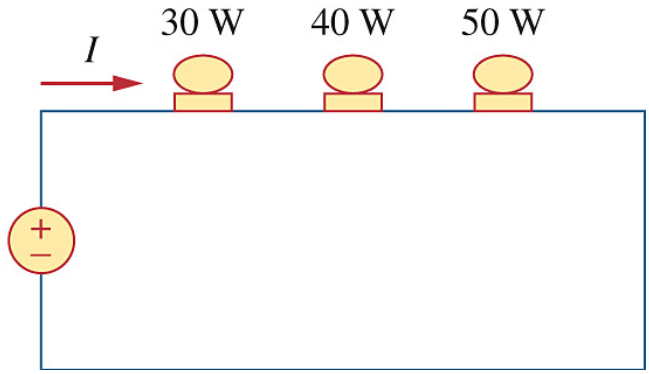

Figure 2.123
For Prob. 2.59.

Solution

Using $p = v^2/R$, we can calculate the resistance of each bulb.

$R_{30W} = (120)^2/30 = 14{,}400/30 = 480\ \Omega$

$R_{40W} = (120)^2/40 = 14{,}400/40 = 360\ \Omega$

$R_{50W} = (120)^2/50 = 14{,}400/50 = 288\ \Omega$

The total resistance of the three bulbs in series is 480+360+288 = 1128 Ω.

The current flowing through each bulb is 120/1128 = 0.10638 A.

$p_{30} = (0.10638)^2 480 = 0.011317 \times 480 =$ **5.432 W**.

$p_{40} = (0.10638)^2 360 = 0.011317 \times 360 =$ **4.074 W**.

$p_{50} = (0.10638)^2 288 = 0.011317 \times 288 =$ **3.259 W**.

Clearly these values are well below the rated powers of each light bulb so we would not expect very much light from any of them. To work properly, they need to be connected in parallel.

www.konkur.in

Chapter 2, Solution 60

If the three bulbs of Prob. 2.59 are connected in parallel to the 120-V source, calculate the current through each bulb.

Solution

Using $p = v^2/R$, we can calculate the resistance of each bulb.

$R_{30W} = (120)^2/30 = 14{,}400/30 = 480\ \Omega$

$R_{40W} = (120)^2/40 = 14{,}400/40 = 360\ \Omega$

$R_{50W} = (120)^2/50 = 14{,}400/50 = 288\ \Omega$

The current flowing through each bulb is 120/R.

$i_{30} = 120/480 =$ **250 mA**.

$i_{40} = 120/360 =$ **333.3 mA**.

$i_{30} = 120/288 =$ **416.7 mA**.

Unlike the light bulbs in 2.59, the lights will glow brightly!

www.konkur.in

Chapter 2, Solution 61

There are three possibilities, but they must also satisfy the current range of 1.2 + 0.06 = 1.26 and 1.2 – 0.06 = 1.14.

(a) Use R_1 and R_2:
$R = R_1 \| R_2 = 80 \| 90 = 42.35\Omega$
$p = i^2R = 70W$
$i^2 = 70/42.35 = 1.6529$ or $i = 1.2857$ (which is outside our range)
cost = \$0.60 + \$0.90 = \$1.50

(b) Use R_1 and R_3:
$R = R_1 \| R_3 = 80 \| 100 = 44.44\ \Omega$
$i^2 = 70/44.44 = 1.5752$ or $i = 1.2551$ (which is within our range),
cost = \$1.35

(c) Use R_2 and R_3:
$R = R_2 \| R_3 = 90 \| 100 = 47.37\Omega$
$i^2 = 70/47.37 = 1.4777$ or $i = 1.2156$ (which is within our range),
cost = \$1.65

Note that cases (b) and (c) satisfy the current range criteria and (b) is the cheaper of the two, hence the correct choice is:

R_1 and R_3

www.konkur.in

Chapter 2, Solution 62

p_A = 110x8 = 880 W, p_B = 110x2 = 220 W

Energy cost = \$0.06 x 365 x10 x (880 + 220)/1000 = **\$240.90**

www.konkur.in

Chapter 2, Solution 63

Use eq. (2.61),

$$R_n = \frac{I_m}{I - I_m} R_m = \frac{2x10^{-3} x100}{5 - 2x10^{-3}} = 0.04\Omega$$

$I_n = I - I_m = 4.998$ A

$p = I_n^2 R = (4.998)^2 (0.04) = 0.9992 \cong$ **1 W**

www.konkur.in

Chapter 2, Solution 64

When $R_x = 0$, $i_x = 10A$ $\qquad R = \frac{110}{10} = 11\ \Omega$

When R_x is maximum, $i_x = 1A \longrightarrow R + R_x = \frac{110}{1} = 110\ \Omega$

i.e., $R_x = 110 - R = 99\ \Omega$

Thus, $R =$ **11 Ω**, $\quad R_x =$ **99 Ω**

www.konkur.in

Chapter 2, Solution 65

$$R_n = \frac{V_{fs}}{I_{fs}} - R_m = \frac{50}{10\text{mA}} - 1\ \text{k}\Omega = \mathbf{4\ k\Omega}$$

www.konkur.in

Chapter 2, Solution 66

$$20\ k\Omega/V = \text{sensitivity} = \frac{1}{I_{fs}}$$

$$\text{i.e., } I_{fs} = \frac{1}{20} k\Omega / V = 50\ \mu A$$

The intended resistance $R_m = \dfrac{V_{fs}}{I_{fs}} = 10(20k\Omega / V) = 200k\Omega$

(a) $R_n = \dfrac{V_{fs}}{i_{fs}} - R_m = \dfrac{50\ V}{50\mu A} - 200\ k\Omega =$ **800 kΩ**

(b) $p = I_{fs}^2 R_n = (50\ \mu A)^2 (800\ k\Omega) =$ **2 mW**

www.konkur.in

Chapter 2, Solution 67

(a) By current division,

$i_0 = 5/(5 + 5)\ (2\ \text{mA}) = 1\ \text{mA}$
$V_0 = (4\ \text{k}\Omega)\ i_0 = 4 \times 10^3 \times 10^{-3} = \mathbf{4\ V}$

(b) $4\text{k}\|6\text{k} = 2.4\text{k}\Omega$. By current division,

$$i_0' = \frac{5}{1+2.4+5}(2\text{mA}) = 1.19\ \text{mA}$$
$$v_0' = (2.4\ \text{k}\Omega)(1.19\ \text{mA}) = \mathbf{2.857\ V}$$

(c) $$\%\ \text{error} = \left|\frac{v_0 - v_0'}{v_0}\right| \times 100\% = \frac{1.143}{4}\text{x}100 = \mathbf{28.57\%}$$

(d) $4\text{k}\|36\ \text{k}\Omega = 3.6\ \text{k}\Omega$. By current division,

$$i_0' = \frac{5}{1+3.6+5}(2\text{mA}) = 1.042\text{mA}$$
$$v_0'(3.6\,\text{k}\Omega)(1.042\,\text{mA}) = 3.75\text{V}$$
$$\%\ \text{error} = \left|\frac{v - v_0'}{v_0}\right|\text{x}100\% = \frac{0.25\text{x}100}{4} = \mathbf{6.25\%}$$

www.konkur.in

Chapter 2, Solution 68

(a) $40 = 24 \| 60\Omega$

$$i = \frac{4}{16+24} = \mathbf{100\ mA}$$

(b) $$i' = \frac{4}{16+1+24} = \mathbf{97.56\ mA}$$

(c) $$\%\ \text{error} = \frac{0.1 - 0.09756}{0.1} x100\% = \mathbf{2.44\%}$$

www.konkur.in

Chapter 2, Solution 69

With the voltmeter in place,

$$V_0 = \frac{R_2 \| R_m}{R_1 + R_S + R_2 \| R_m} V_S$$

where R_m = 100 kΩ without the voltmeter,

$$V_0 = \frac{R_2}{R_1 + R_2 + R_S} V_S$$

(a) When R_2 = 1 kΩ, $R_m \| R_2 = \frac{100}{101} k\Omega$

$$V_0 = \frac{\frac{100}{101}}{\frac{100}{101} + 30}(40) = \textbf{1.278 V (with)}$$

$$V_0 = \frac{1}{1+30}(40) = \textbf{1.29 V (without)}$$

(b) When R_2 = 10 kΩ, $R_2 \| R_m = \frac{1000}{110} = 9.091 k\Omega$

$$V_0 = \frac{9.091}{9.091+30}(40) = \textbf{9.30 V (with)}$$

$$V_0 = \frac{10}{10+30}(40) = \textbf{10 V (without)}$$

(c) When R_2 = 100 kΩ, $R_2 \| R_m = 50 k\Omega$

$$V_0 = \frac{50}{50+30}(40) = \textbf{25 V (with)}$$

$$V_0 = \frac{100}{100+30}(40) = \textbf{30.77 V (without)}$$

www.konkur.in

Chapter 2, Solution 70

(a) Using voltage division,

$$v_a = \frac{12}{12+8}(25) = \underline{15V}$$

$$v_b = \frac{10}{10+15}(25) = \underline{10V}$$

$$v_{ab} = v_a - v_b = 15 - 10 = \underline{5V}$$

(b)

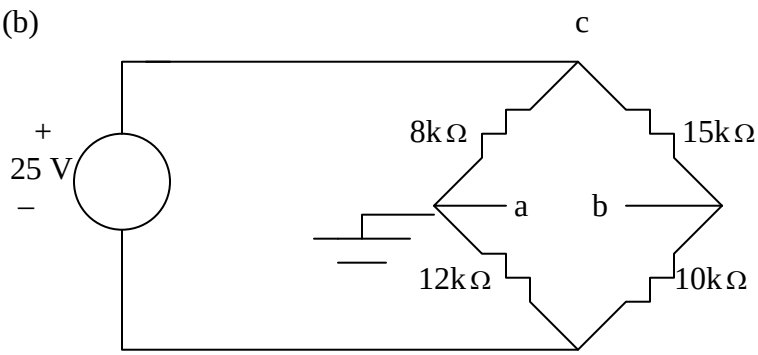

v_a = **<u>0</u>**; v_{ac} = –(8/(8+12))25 = –10V; v_{cb} = (15/(15+10))25 = 15V.

$v_{ab} = v_{ac} + v_{cb}$ = –10 + 15 = **<u>5V</u>**.

$v_b = -v_{ab}$ = **<u>–5V</u>**.

www.konkur.in

Chapter 2, Solution 71

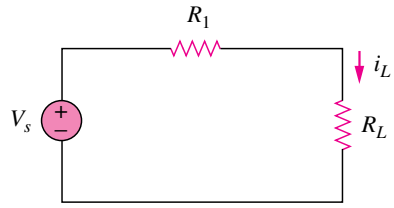

Given that v_s = 30 **V**, R_1 = 20 Ω, I_L = 1 **A**, find R_L.

$$v_s = i_L(R_1 + R_L) \quad \longrightarrow \quad R_L = \frac{v_s}{i_L} - R_1 = \frac{30}{1} - 20 = \underline{10\Omega}$$

www.konkur.in

Chapter 2, Solution 72

Converting the delta subnetwork into wye gives the circuit below.

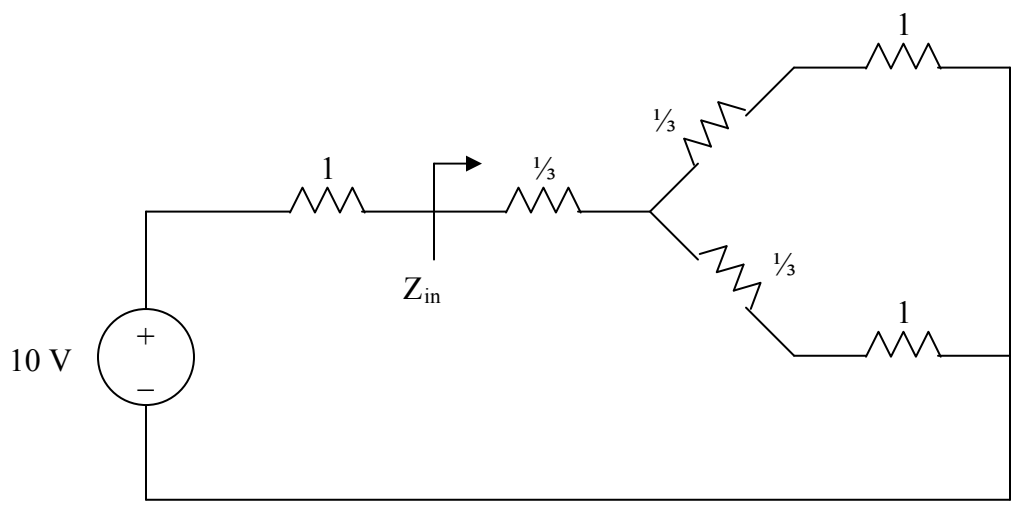

$$Z_{in} = \frac{1}{3} + (1+\frac{1}{3})//(1+\frac{1}{3}) = \frac{1}{3} + \frac{1}{2}(\frac{4}{3}) = 1\ \Omega$$

$$V_o = \frac{Z_{in}}{1+Z_{in}}(10) = \frac{1}{1+1}(10) = \underline{5\ \text{V}}$$

www.konkur.in

Chapter 2, Solution 73

By the current division principle, the current through the ammeter will be one-half its previous value when

$R = 20 + R_x$

$65 = 20 + R_x \longrightarrow R_x = \mathbf{45\ \Omega}$

www.konkur.in

Chapter 2, Solution 74

With the switch in high position,

$6 = (0.01 + R_3 + 0.02) \times 5 \longrightarrow R_3 = \mathbf{1.17\ \Omega}$

At the medium position,

$6 = (0.01 + R_2 + R_3 + 0.02) \times 3 \longrightarrow R_2 + R_3 = 1.97$

or $R_2 = 1.97 - 1.17 = \mathbf{0.8\ \Omega}$

At the low position,

$6 = (0.01 + R_1 + R_2 + R_3 + 0.02) \times 1 \longrightarrow R_1 + R_2 + R_3 = 5.97$
$R_1 = 5.97 - 1.97 = \mathbf{4\ \Omega}$

www.konkur.in

Chapter 2, Solution 75

Converting delta-subnetworks to wye-subnetworks leads to the circuit below.

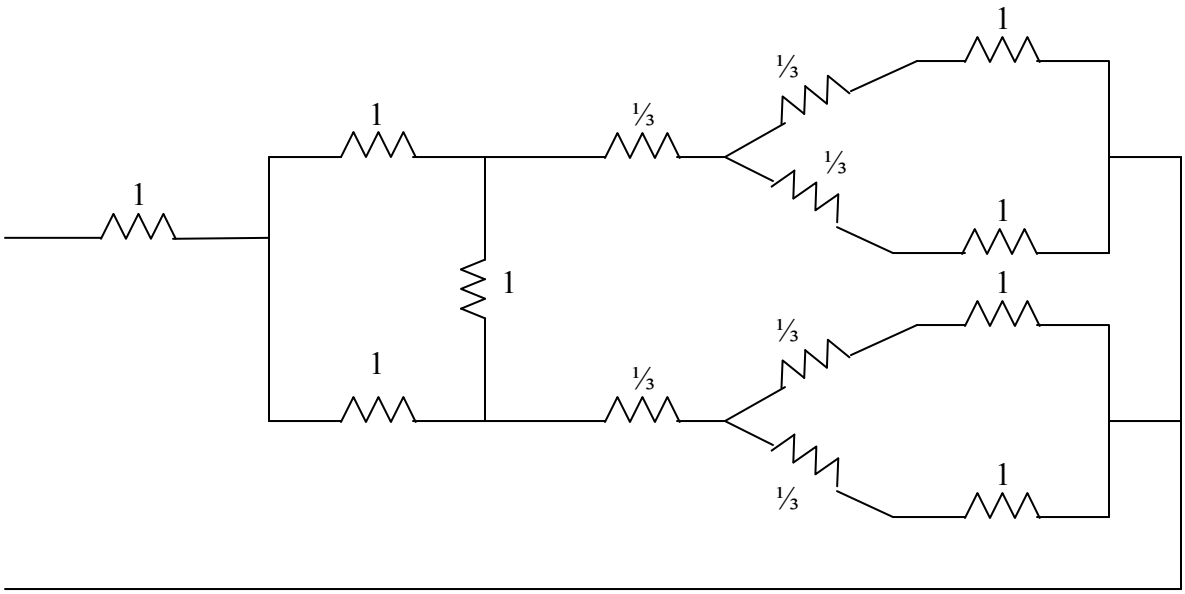
1
1
1

www.konkur.in

Chapter 2, Solution 76

$Z_{ab} = 1 + 1 = \mathbf{2\ \Omega}$

www.konkur.in

Chapter 2, Solution 77

(a) $5\ \Omega = 10\|10 = 20\|20\|20\|20$

i.e., **four 20 Ω resistors in parallel.**

(b) $311.8 = 300 + 10 + 1.8 = 300 + 20\|20 + 1.8$

i.e., **one 300Ω resistor in series with 1.8Ω resistor and a parallel combination of two 20Ω resistors.**

(c) $40\text{k}\Omega = 12\text{k}\Omega + 28\text{k}\Omega = (24\|24k) + (56k\|56k)$

i.e., **Two 24kΩ resistors in parallel connected in series with two 56kΩ resistors in parallel.**

(a) $42.32\text{k}\Omega = 42\text{l} + 320$

$= 24\text{k} + 28\text{k} = 320$

$= 24\text{k} = 56\text{k}\|56\text{k} + 300 + 20$

i.e., **A series combination of a 20Ω resistor, 300Ω resistor, 24kΩ resistor, and a parallel combination of two 56kΩ resistors.**

www.konkur.in

Chapter 2, Solution 78

The equivalent circuit is shown below:

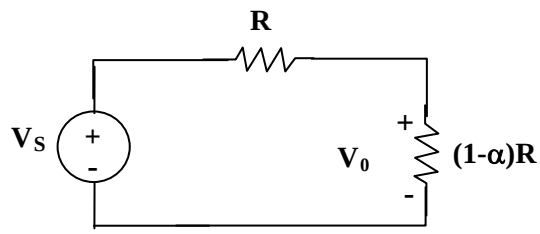

$$V_0 = \frac{(1-\alpha)R}{R+(1-\alpha)R} V_S = \frac{1-\alpha}{2-\alpha} V_S$$

$$\frac{V_0}{V_S} = \frac{1-\alpha}{2-\alpha}$$

www.konkur.in

Chapter 2, Solution 79

Since $p = v^2/R$, the resistance of the sharpener is
$R = v^2/(p) = 6^2/(240 \times 10^{-3}) = 150\Omega$
$I = p/(v) = 240$ mW/(6V) = 40 mA

Since R and R_x are in series, I flows through both.

$IR_x = V_x = 9 - 6 = 3$ V
$R_x = 3/(I) = 3/(40 \text{ mA}) = 3000/(40) =$ **75 Ω**

www.konkur.in

Chapter 2, Solution 80

The amplifier can be modeled as a voltage source and the loudspeaker as a resistor:

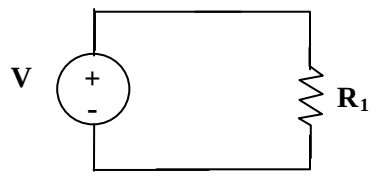

Case 1

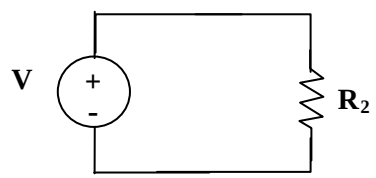

Case 2

Hence $p = \dfrac{V^2}{R}$, $\dfrac{p_2}{p_1} = \dfrac{R_1}{R_2} \longrightarrow p_2 = \dfrac{R_1}{R_2} p_1 = \dfrac{10}{4}(12) =$ **30 W**

www.konkur.in

Chapter 2, Solution 81

Let R_1 and R_2 be in kΩ.

$$R_{eq} = R_1 + R_2 \| 5 \qquad (1)$$

$$\frac{V_0}{V_S} = \frac{5 \| R_2}{5 \| R_2 + R_1} \qquad (2)$$

From (1) and (2), $0.05 = \dfrac{5 \| R_1}{40} \longrightarrow 2 = 5 \| R_2 = \dfrac{5R_2}{5 + R_2}$ or $R_2 = 3.333$ kΩ

From (1), $40 = R_1 + 2 \longrightarrow R_1 = 38$ kΩ

Thus,

R_1 = 38 kΩ, R_2 = 3.333 kΩ

www.konkur.in

Chapter 2, Solution 82

(a)

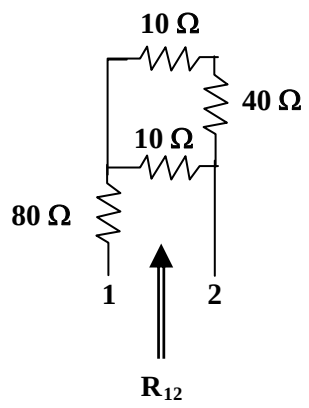

$R_{12} = 80 + 10\|(10+40) = 80 + \frac{50}{6} =$ **88.33 Ω**

(b)

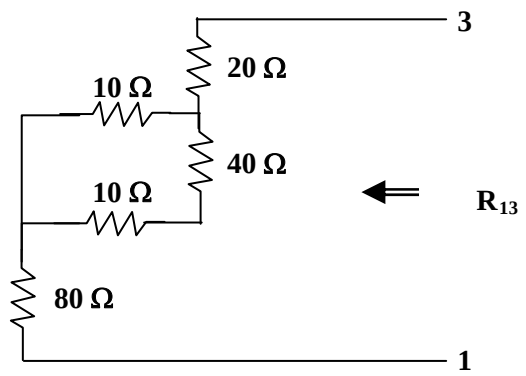

$R_{13} = 80 + 10\|(10+40) + 20 = 100 + 10\|50 =$ **108.33 Ω**

(c)

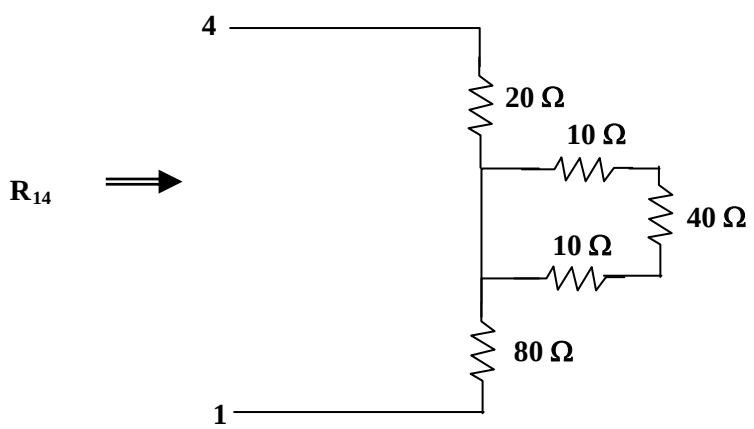

$R_{14} = 80 + 0\|(10+40+10) + 20 = 80 + 0 + 20 =$ **100 Ω**

www.konkur.in

Chapter 2, Solution 83

The voltage across the fuse should be negligible when compared with 24 V (this can be checked later when we check to see if the fuse rating is exceeded in the final circuit). We can calculate the current through the devices.

$$I_1 = \frac{p_1}{V_1} = \frac{45mW}{9V} = 5mA$$

$$I_2 = \frac{p_2}{V_2} = \frac{480mW}{24} = 20mA$$

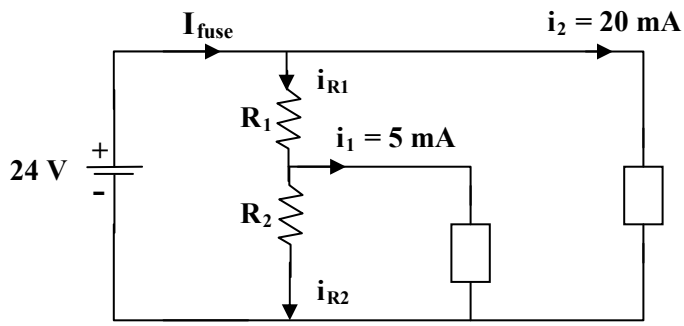

Let R_3 represent the resistance of the first device, we can solve for its value from knowing the voltage across it and the current through it.

$$R_3 = 9/0.005 = 1{,}800\ \Omega$$

This is an interesting problem in that it essentially has two unknowns, R_1 and R_2 but only one condition that need to be met and that the voltage across R_3 must equal 9 volts. Since the circuit is powered by a battery we could choose the value of R_2 which draws the least current, $R_2 = \infty$. Thus we can calculate the value of R_1 that give 9 volts across R_3.

$$9 = (24/(R_1 + 1800))1800 \text{ or } R_1 = (24/9)1800 - 1800 = \mathbf{3\ k\Omega}$$

This value of R_1 means that we only have a total of 25 mA flowing out of the battery through the fuse which means it will not open and produces a voltage drop across it of 0.05V. This is indeed negligible when compared with the 24-volt source.

www.konkur.in

Chapter 3, Solution 1

Using Fig. 3.50, design a problem to help other students to better understand nodal analysis.

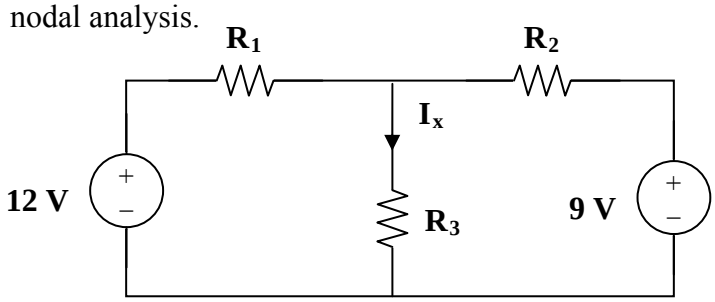

Figure 3.50
For Prob. 3.1 and Prob. 3.39.

Solution

Given $R_1 = 4\ k\Omega$, $R_2 = 2\ k\Omega$, and $R_3 = 2\ k\Omega$, determine the value of I_x using nodal analysis.

Let the node voltage in the top middle of the circuit be designated as V_x.

$[(V_x–12)/4k] + [(V_x–0)/2k] + [(V_x–9)/2k] = 0$ or (multiply this by 4 k)

$(1+2+2)V_x = 12+18 = 30$ or $V_x = 30/5 = 6$ volts and

$$I_x = 6/(2k) = \mathbf{3\ mA}.$$

www.konkur.in

Chapter 3, Solution 2

At node 1,

$$\frac{-v_1}{10} - \frac{v_1}{5} = 6 + \frac{v_1 - v_2}{2} \longrightarrow 60 = -8v_1 + 5v_2 \qquad (1)$$

At node 2,

$$\frac{v_2}{4} = 3 + 6 + \frac{v_1 - v_2}{2} \longrightarrow 36 = -2v_1 + 3v_2 \qquad (2)$$

Solving (1) and (2),

v_1 = **0 V**, v_2 = **12 V**

www.konkur.in

Chapter 3, Solution 3

Applying KCL to the upper node,

$$-8+\frac{v_0}{10}+\frac{v_o}{20}+\frac{v_o}{30}+20+\frac{v_0}{60}=0 \text{ or } v_0 = \mathbf{-60\ V}$$

$$i_1 = \frac{v_0}{10} = \mathbf{-6\ A}\ ,\ i_2 = \frac{v_0}{20} = \mathbf{-3\ A},$$

$$i_3 = \frac{v_0}{30} = \mathbf{-2\ A},\ i_4 = \frac{v_0}{60} = \mathbf{1\ A}.$$

www.konkur.in

Chapter 3, Solution 4

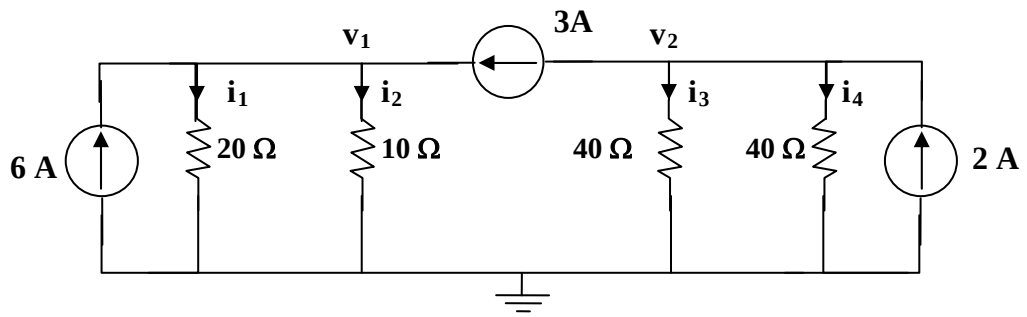

At node 1,

$$-6 - 3 + v_1/(20) + v_1/(10) = 0 \text{ or } v_1 = 9(200/30) = 60 \text{ V}$$

At node 2,

$$3 - 2 + v_2/(10) + v_2/(5) = 0 \text{ or } v_2 = -1(1600/80) = -20 \text{ V}$$

$i_1 = v_1/(20) =$ **3 A**, $i_2 = v_1/(10) =$ **6 A**,
$i_3 = v_2/(40) =$ **–500 mA**, $i_4 = v_2/(40) =$ **–500 mA**.

www.konkur.in

Chapter 3, Solution 5

Apply KCL to the top node.

$$\frac{30 - v_0}{2k} + \frac{20 - v_0}{5k} = \frac{v_0}{4k} \longrightarrow v_0 = \mathbf{20\ V}$$

www.konkur.in

Chapter 3, Solution 6.

Solve for V_1 using nodal analysis.

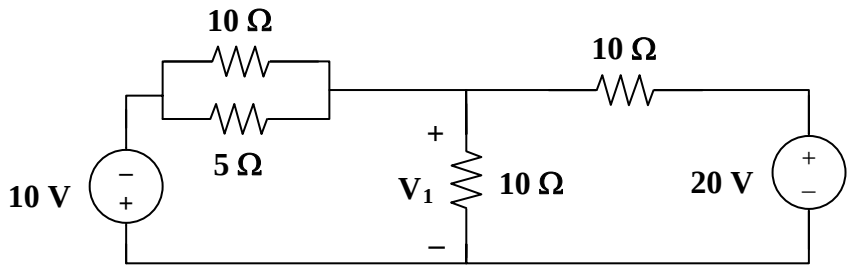

Figure 3.55
For Prob. 3.6.

Step 1. The first thing to do is to select a reference node and to identify all the unknown nodes. We select the bottom of the circuit as the reference node. The only unknown node is the one connecting all the resistors together and we will call that node V_1. The other two nodes are at the top of each source. Relative to the reference, the one at the top of the 10-volt source is –10 V. At the top of the 20-volt source is +20 V.

Step 2. Setup the nodal equation (there is only one since there is only one unknown).

$$\frac{(V_1-(-10))}{5}+\frac{(V_1-(-10))}{10}+\frac{(V_1-0)}{10}+\frac{(V_1-20)}{10}=0$$

Step 3. Simplify and solve.

$$\left(\frac{1}{5}+\frac{1}{10}+\frac{1}{10}+\frac{1}{10}\right)V_1=-\frac{10}{5}-\frac{10}{10}+\frac{20}{10}$$
$$(0.2+0.1+0.1+0.1)V_1=0.5V_1=-2-1+2=-1$$

or

$$V_1 = \mathbf{-2\ V}.$$

The answer can be checked by calculating all the currents and see if they add up to zero. The top two currents on the left flow right to left and are 0.8 A and 1.6 A respectively. The current flowing up through the 10-ohm resistor is 0.2 A. The current flowing right to left through the 10-ohm resistor is 2.2 A. Summing all the currents flowing out of the node, V_1, we get, +0.8+1.6 –0.2–2.2 = 0. The answer checks.

www.konkur.in

Chapter 3, Solution 7

$$-2+\frac{V_x-0}{10}+\frac{V_x-0}{20}+0.2V_x=0$$

$0.35V_x = 2$ or $V_x =$ **5.714 V**.

Substituting into the original equation for a check we get,

0.5714 + 0.2857 + 1.1428 = 1.9999 checks!

www.konkur.in

Chapter 3, Solution 8

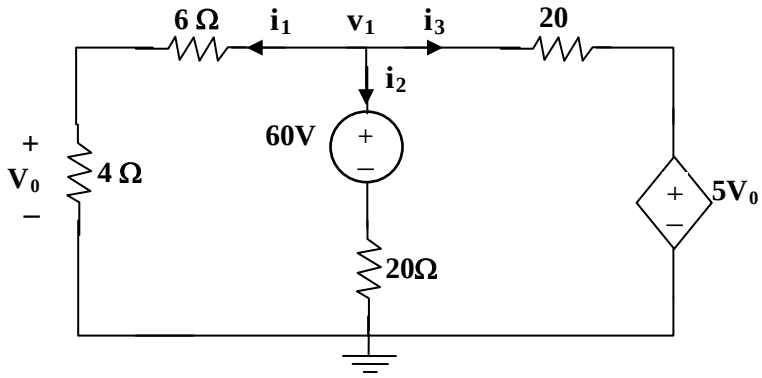

$$i_1 + i_2 + i_3 = 0 \longrightarrow \frac{v_1}{10} + \frac{(v_1 - 60) - 0}{20} + \frac{v_1 - 5v_0}{20} = 0$$

But $v_0 = \frac{2}{5} v_1$ so that $2v_1 + v_1 - 60 + v_1 - 2v_1 = 0$

or $v_1 = 60/2 = 30$ V, therefore $v_o = 2v_1/5 =$ **12 V**.

www.konkur.in

Chapter 3, Solution 9

Let V_1 be the unknown node voltage to the right of the 250-Ω resistor. Let the ground reference be placed at the bottom of the 50-Ω resistor. This leads to the following nodal equation:

$$\frac{V_1 - 24}{250} + \frac{V_1 - 0}{50} + \frac{V_1 - 60I_b - 0}{150} = 0$$

simplifying we get

$$3V_1 - 72 + 15V_1 + 5V_1 - 300I_b = 0$$

But $I_b = \dfrac{24 - V_1}{250}$. Substituting this into the nodal equation leads to

$$24.2V_1 - 100.8 = 0 \quad \text{or } V_1 = 4.165 \text{ V.}$$

Thus, $I_b = (24 - 4.165)/250 =$ **79.34 mA**.

www.konkur.in

Chapter 3, Solution 10

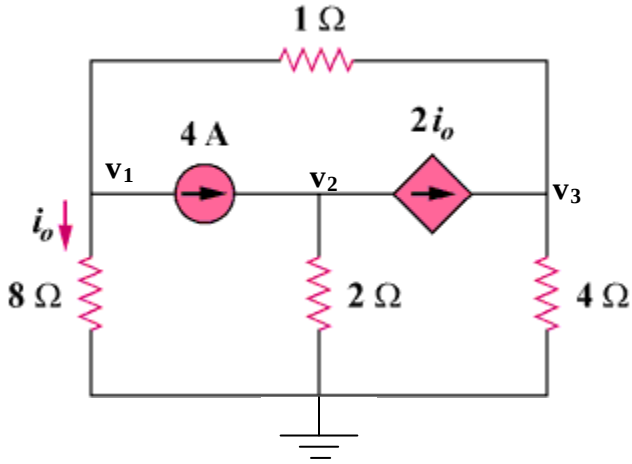

At node 1. $[(v_1–0)/8] + [(v_1–v_3)/1] + 4 = 0$

At node 2. $–4 + [(v_2–0)/2] + 2i_o = 0$

At node 3. $–2i_o + [(v_3–0)/4] + [(v_3–v_1)/1] = 0$

Finally, we need a constraint equation, $i_o = v_1/8$

This produces,

$$1.125v_1 – v_3 = 4 \quad (1)$$

$$0.25v_1 + 0.5v_2 = 4 \quad (2)$$

$$–1.25v_1 + 1.25v_3 = 0 \text{ or } v_1 = v_3 \quad (3)$$

Substituting (3) into (1) we get $(1.125–1)v_1 = 4$ or $v_1 = 4/0.125 = 32$ volts. This leads to,

$i_o = 32/8 =$ **4 amps**.

www.konkur.in

Chapter 3, Solution 11

Find V_o and the power absorbed by all the resistors in the circuit of Fig. 3.60.

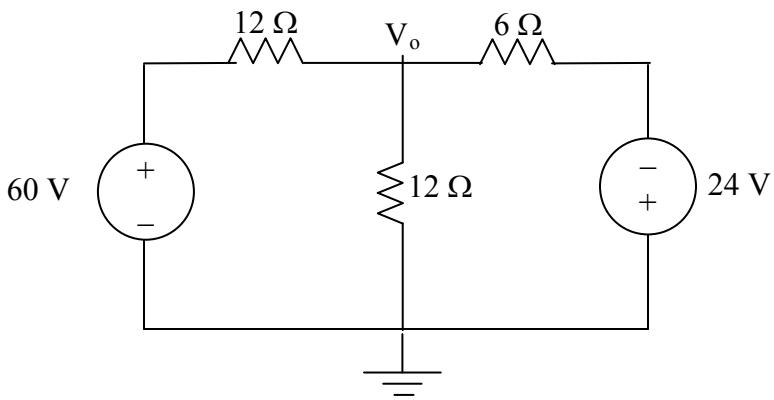

Figure 3.60
For Prob. 3.11.

Solution

At the top node, KCL produces $\dfrac{V_o - 60}{12} + \dfrac{V_o - 0}{12} + \dfrac{V_o - (-24)}{6} = 0$

$(1/3)V_o = 1$ or $V_o =$ **3 V**.

$P_{12\Omega} = (3–60)^2/1 =$ **293.9 W** (this is for the 12 Ω resistor in series with the 60 V source)

$P_{12\Omega} = (V_o)^2/12 = 9/12 =$ **750 mW** (this is for the 12 Ω resistor connecting V_o to ground)

$P_{4\Omega} = (3–(–24))^2/6 =$ **121.5 W**.

www.konkur.in

Chapter 3, Solution 12

There are two unknown nodes, as shown in the circuit below.

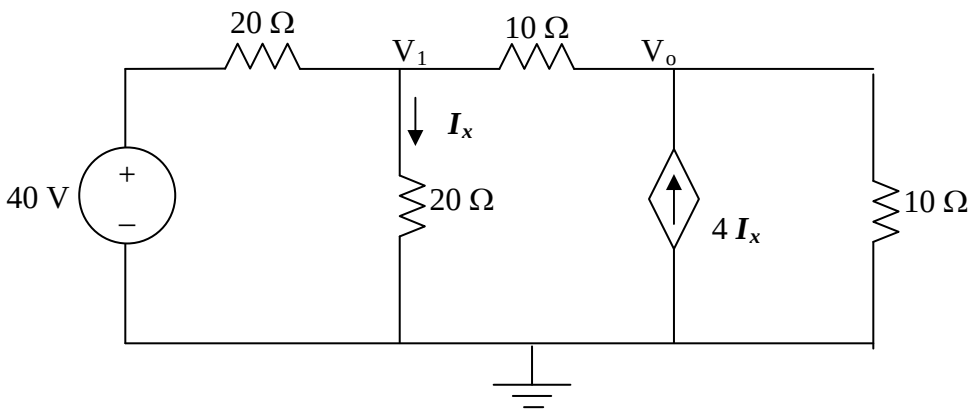

At node 1,

$$\frac{V_1 - 40}{20} + \frac{V_1 - 0}{20} + \frac{V_1 - V_o}{10} = 0 \text{ or}$$

$$(0.05+0.05+.1)V_1 - 0.1V_o = 0.2V_1 - 0.1V_o = 2 \qquad (1)$$

At node o,

$$\frac{V_o - V_1}{10} - 4I_x + \frac{V_o - 0}{10} = 0 \text{ and } I_x = V_1/20$$

$$-0.1V_1 - 0.2V_1 + 0.2V_o = -0.3V_1 + 0.2V_o = 0 \text{ or} \qquad (2)$$

$$V_1 = (2/3)V_o \qquad (3)$$

Substituting (3) into (1),

$$0.2(2/3)V_o - 0.1V_o = 0.03333V_o = 2 \text{ or}$$

$$V_o = \mathbf{60\ V}.$$

www.konkur.in

Chapter 3, Solution 13

Calculate v_1 and v_2 in the circuit of Fig. 3.62 using nodal analysis.

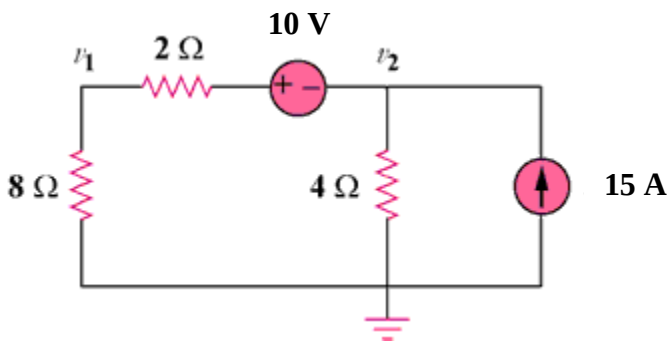

Figure 3.62
For Prob. 3.13.

Solution

At node number 2, $[((v_2 + 10) - 0)/10] + [(v_2 - 0)/4] - 15 = 0$ or
$(0.1+0.25)v_2 = 0.35v_2 = -1+15 = 14$ or

v_2 = **40 volts**.

Next, $I = [(v_2 + 10) - 0]/10 = (40 + 10)/10 = 5$ amps and

$v_1 = 8x5 =$ **40 volts**.

www.konkur.in

Chapter 3, Solution 14

Using nodal analysis, find v_o in the circuit of Fig. 3.63.

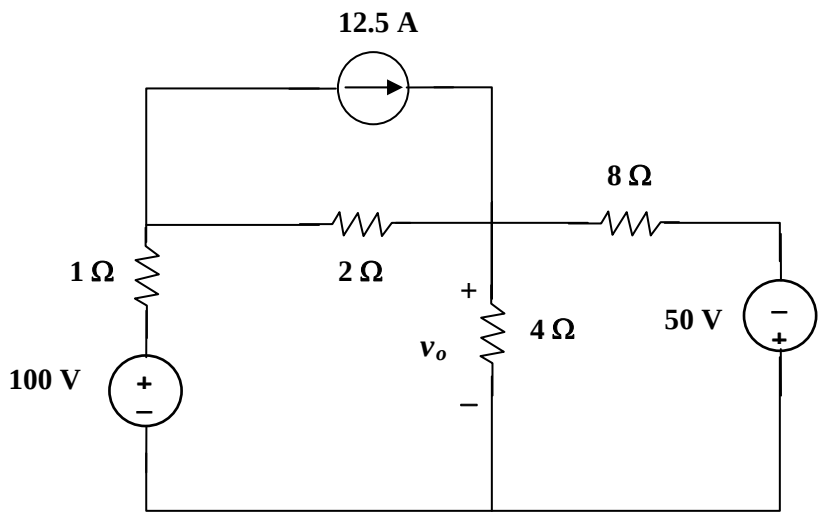

Figure 3.63
For Prob. 3.14.

Solution

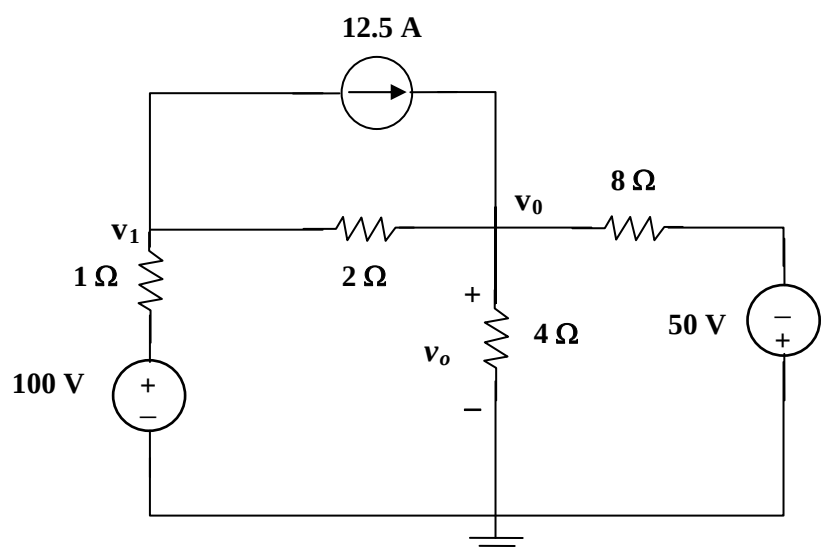

At node 1,

$$[(v_1-100)/1] + [(v_1-v_o)/2] + 12.5 = 0 \text{ or } 3v_1 - v_o = 200-25 = 175 \qquad (1)$$

At node o,

$$[(v_o-v_1)/2] - 12.5 + [(v_o-0)/4] + [(v_o+50)/8] = 0 \text{ or } -4v_1 + 7v_o = 50 \qquad (2)$$

Adding 4x(1) to 3x(2) yields,

www.konkur.in

$$4(1) + 3(2) = -4v_o + 21v_o = 700 + 150 \text{ or } 17v_o = 850 \text{ or}$$

$$v_o = \mathbf{50\ V}.$$

Checking, we get $v_1 = (175+v_o)/3 = 75$ V.

At node 1,

$$[(75-100)/1] + [(75-50)/2] + 12.5 = -25 + 12.5 + 12.5 = 0!$$

At node o,

$$[(50-75)/2] + [(50-0)/4] + [(50+50)/8] - 12.5 = -12.5 + 12.5 + 12.5 - 12.5 = 0!$$

www.konkur.in

Chapter 3, Solution 15

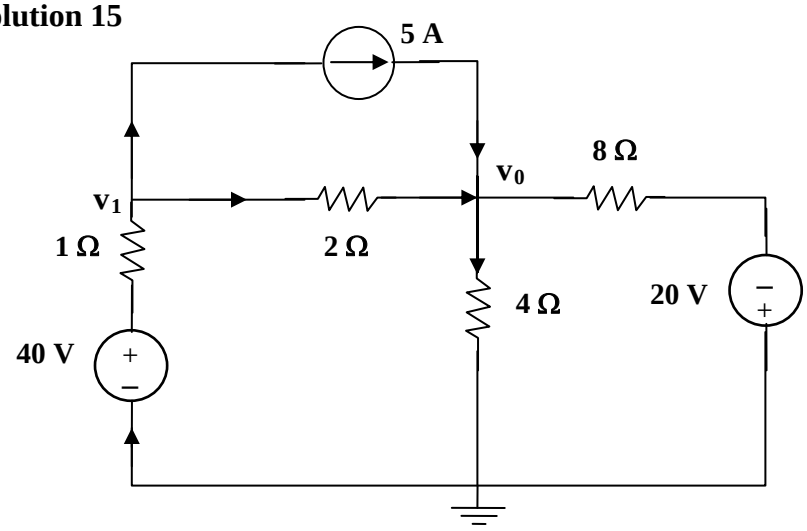

Nodes 1 and 2 form a supernode so that $v_1 = v_2 + 10$ (1)

At the supernode, $2 + 6v_1 + 5v_2 = 3(v_3 - v_2) \longrightarrow$ $2 + 6v_1 + 8v_2 = 3v_3$ (2)

At node 3, $2 + 4 = 3(v_3 - v_2) \longrightarrow$ $v_3 = v_2 + 2$ (3)

Substituting (1) and (3) into (2),

$$2 + 6v_2 + 60 + 8v_2 = 3v_2 + 6 \longrightarrow v_2 = \frac{-56}{11}$$

$$v_1 = v_2 + 10 = \frac{54}{11}$$

$$i_0 = 6v_i = \mathbf{29.45\ A}$$

$$P_{65} = \frac{v_1^2}{R} = v_1^2 G = \left(\frac{54}{11}\right)^2 6 = \mathbf{144.6\ W}$$

$$P_{55} = v_2^2 G = \left(\frac{-56}{11}\right)^2 5 = \mathbf{129.6\ W}$$

$$P_{35} = (v_L - v_3)^2 G = (2)^2 3 = \mathbf{12\ W}$$

www.konkur.in

Chapter 3, Solution 16

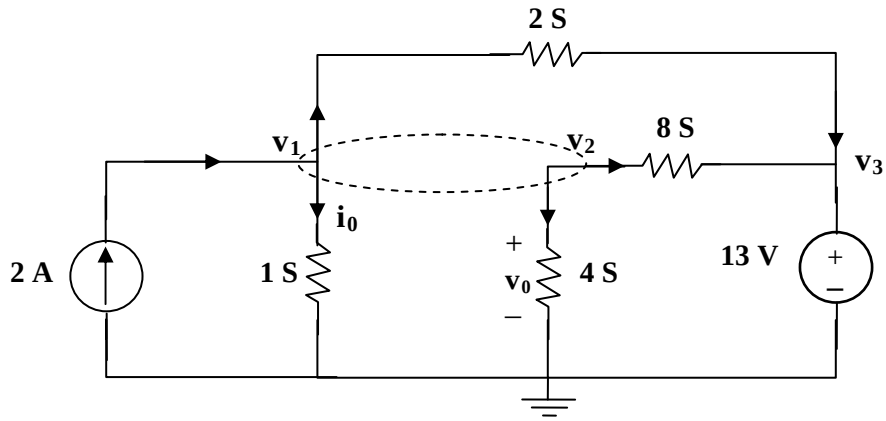

At the supernode,

$2 = v_1 + 2(v_1 - v_3) + 8(v_2 - v_3) + 4v_2$, which leads to $2 = 3v_1 + 12v_2 - 10v_3$ (1)

But

$v_1 = v_2 + 2v_0$ and $v_0 = v_2$.

Hence

$$v_1 = 3v_2 \quad (2)$$
$$v_3 = 13V \quad (3)$$

Substituting (2) and (3) with (1) gives,

v_1 = **18.858 V**, v_2 = **6.286 V**, v_3 = **13 V**

www.konkur.in

Chapter 3, Solution 17

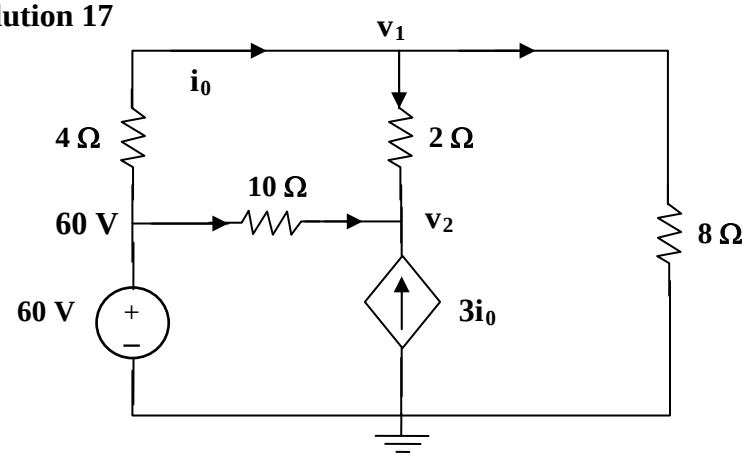

At node 1, $\frac{60 - v_1}{4} = \frac{v_1}{8} + \frac{v_1 - v_2}{2}$ $\qquad 120 = 7v_1 - 4v_2 \qquad (1)$

At node 2, $3i_0 + \frac{60 - v_2}{10} + \frac{v_1 - v_2}{2} = 0$

But $i_0 = \frac{60 - v_1}{4}$.

Hence

$$\frac{3(60 - v_1)}{4} + \frac{60 - v_2}{10} + \frac{v_1 - v_2}{2} = 0 \longrightarrow 1020 = 5v_1 + 12v_2 \qquad (2)$$

Solving (1) and (2) gives $v_1 = 53.08$ V. Hence $i_0 = \frac{60 - v_1}{4} =$ **1.73 A**

www.konkur.in

Chapter 3, Solution 18

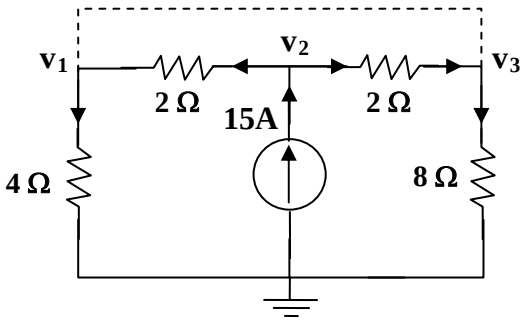

(a)

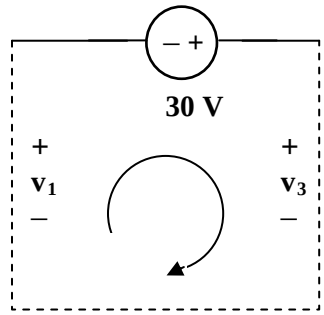

(b)

At node 2, in Fig. (a), $\frac{v_2 - v_1}{2} + \frac{v_2 - v_3}{2} - 15 = 0$ or $-0.5v_1 + v_2 - 0.5v_3 = 15$ (1)

At the supernode, $\frac{v_2 - v_1}{2} + \frac{v_2 - v_3}{2} - \frac{v_1}{4} - \frac{v_3}{8} = 0$ and $(v_1/4) - 15 + (v_3/8) = 0$ or

$2v_1 + v_3 = 120$ (2)

From Fig. (b), $-v_1 - 30 + v_3 = 0$ or $v_3 = v_1 + 30$ (3)

Solving (1) to (3), we obtain,

$v_1 =$ **30 V**, $v_2 =$ **60 V** $= v_3$

www.konkur.in

Chapter 3, Solution 19

At node 1,

$$5 = 3 + \frac{V_1 - V_3}{2} + \frac{V_1 - V_2}{8} + \frac{V_1}{4} \quad \longrightarrow \quad 16 = 7V_1 - V_2 - 4V_3 \qquad (1)$$

At node 2,

$$\frac{V_1 - V_2}{8} = \frac{V_2}{2} + \frac{V_2 - V_3}{4} \quad \longrightarrow \quad 0 = -V_1 + 7V_2 - 2V_3 \qquad (2)$$

At node 3,

$$3 + \frac{12 \ - V_3}{8} + \frac{V_1 - V_3}{2} + \frac{V_2 - V_3}{4} = 0 \quad \longrightarrow \quad -36 = 4V_1 + 2V_2 - 7V_3 \quad (3)$$

From (1) to (3),

$$\begin{pmatrix} 7 & -1 & -4 \\ -1 & 7 & -2 \\ 4 & 2 & -7 \end{pmatrix} \begin{pmatrix} V_1 \\ V_2 \\ V_3 \end{pmatrix} = \begin{pmatrix} 16 \\ 0 \\ -36 \end{pmatrix} \quad \longrightarrow \quad AV = B$$

Using MATLAB,

$$\boldsymbol{V = A^{-1}B = \begin{bmatrix} 10 \\ 4.933 \\ 12.267 \end{bmatrix}} \quad \longrightarrow \quad \underline{\boldsymbol{V_1 = 10\text{ V},\ V_2 = 4.933\text{ V},\ V_3 = 12.267\text{ V}}}$$

www.konkur.in

Chapter 3, Solution 20

Nodes 1 and 2 form a supernode; so do nodes 1 and 3. Hence

$$\frac{V_1}{4}+\frac{V_2}{1}+\frac{V_3}{4}=0 \qquad \longrightarrow \qquad V_1+4V_2+V_3=0 \qquad (1)$$

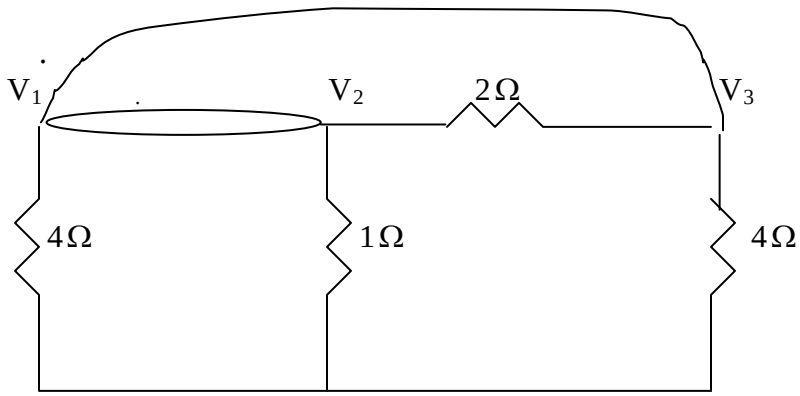

Between nodes 1 and 3,

$$-V_1+12+V_3=0 \qquad \longrightarrow \qquad V_3=V_1-12 \qquad (2)$$

Similarly, between nodes 1 and 2,

$$V_1=V_2+2i \qquad (3)$$

But $i=V_3/4$. Combining this with (2) and (3) gives

$$.V_2=6+V_1/2 \qquad (4)$$

Solving (1), (2), and (4) leads to

$$\underline{\boldsymbol{V_1=-3\text{V},\quad V_2=4.5\text{V}, V_3=-15\text{V}}}$$

www.konkur.in

Chapter 3, Solution 21

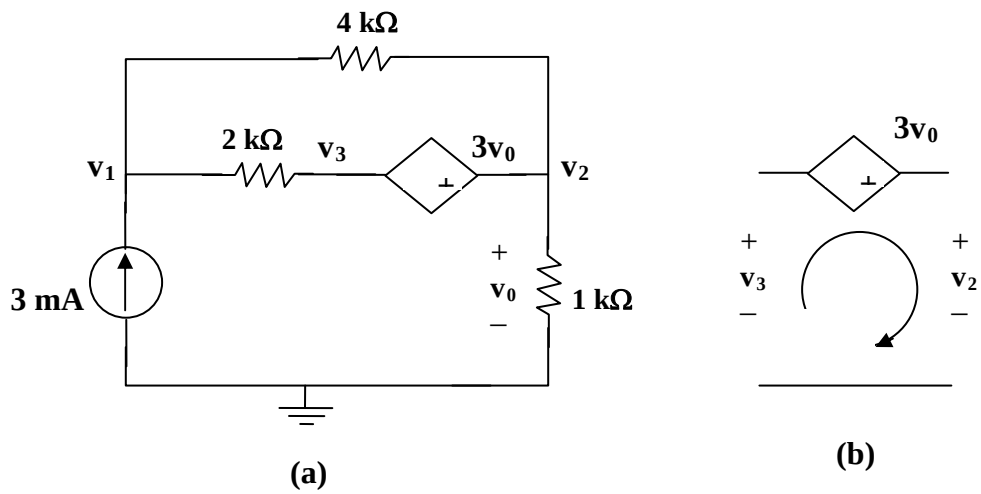

Let v_3 be the voltage between the 2kΩ resistor and the voltage-controlled voltage source. At node 1,

$$3\text{x}10^{-3} = \frac{v_1 - v_2}{4000} + \frac{v_1 - v_3}{2000} \longrightarrow 12 = 3v_1 - v_2 - 2v_3 \qquad (1)$$

At node 2,

$$\frac{v_1 - v_2}{4} + \frac{v_1 - v_3}{2} = \frac{v_2}{1} \longrightarrow 3v_1 - 5v_2 - 2v_3 = 0 \qquad (2)$$

Note that $v_0 = v_2$. We now apply KVL in Fig. (b)

$$-v_3 - 3v_2 + v_2 = 0 \longrightarrow v_3 = -2v_2 \qquad (3)$$

From (1) to (3),

v_1 = **1 V**, v_2 = **3 V**

www.konkur.in

Chapter 3, Solution 22

At node 1, $\frac{12 - v_0}{2} = \frac{v_1}{4} + 3 + \frac{v_1 - v_0}{8} \longrightarrow 24 = 7v_1 - v_2$ (1)

At node 2, $3 + \frac{v_1 - v_2}{8} = \frac{v_2 + 5v_2}{1}$

But, $v_1 = 12 - v_1$

Hence, $24 + v_1 - v_2 = 8\,(v_2 + 60 + 5v_1) = 4$ V

$456 = 41v_1 - 9v_2$ (2)

Solving (1) and (2),

v_1 = **- 10.91 V**, v_2 = **- 100.36 V**

www.konkur.in

Chapter 3, Solution 23

We apply nodal analysis to the circuit shown below.

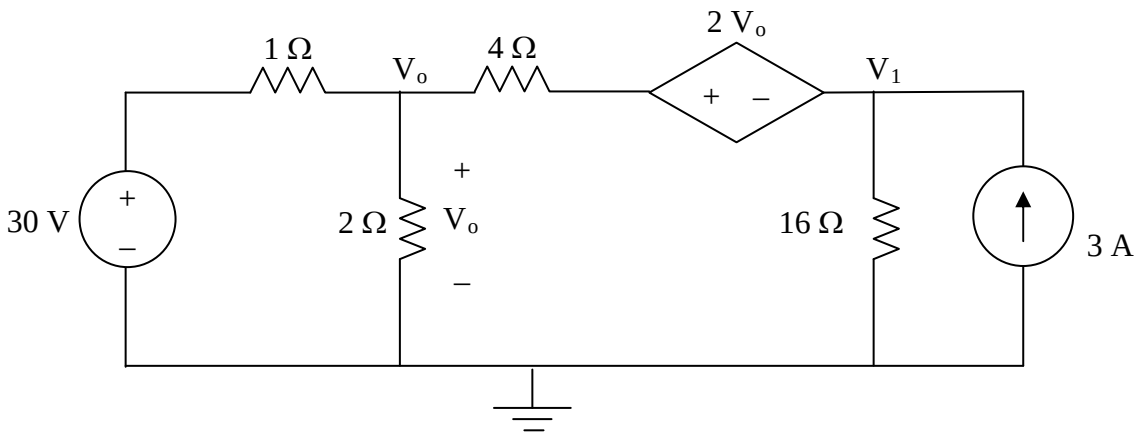

At node o,

$$\frac{V_o - 30}{1} + \frac{V_o - 0}{2} + \frac{V_o - (2V_o + V_1)}{4} = 0 \rightarrow 1.25V_o - 0.25V_1 = 30 \qquad (1)$$

At node 1,

$$\frac{(2V_o + V_1) - V_o}{4} + \frac{V_1 - 0}{16} - 3 = 0 \rightarrow 5V_1 + 4V_o = 48 \qquad (2)$$

From (1), $V_1 = 5V_o - 120$. Substituting this into (2) yields
$29V_o = 648$ or $V_o =$ **22.34 V**.

www.konkur.in

Chapter 3, Solution 24

Consider the circuit below.

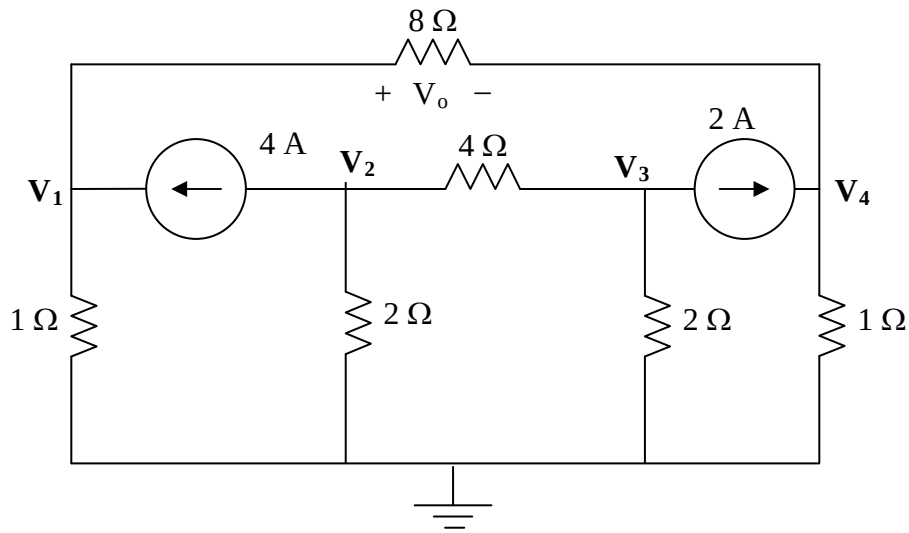

$$\frac{V_1 - 0}{1} - 4 + \frac{V_1 - V_4}{8} = 0 \rightarrow 1.125V_1 - 0.125V_4 = 4 \qquad (1)$$

$$+4 + \frac{V_2 - 0}{2} + \frac{V_2 - V_3}{4} = 0 \rightarrow 0.75V_2 - 0.25V_3 = -4 \qquad (2)$$

$$\frac{V_3 - V_2}{4} + \frac{V_3 - 0}{2} + 2 = 0 \rightarrow -0.25V_2 + 0.75V_3 = -2 \qquad (3)$$

$$-2 + \frac{V_4 - V_1}{8} + \frac{V_4 - 0}{1} = 0 \rightarrow -0.125V_1 + 1.125V_4 = 2 \qquad (4)$$

$$\begin{bmatrix} 1.125 & 0 & 0 & -0.125 \\ 0 & 0.75 & -0.25 & 0 \\ 0 & -0.25 & 0.75 & 0 \\ -0.125 & 0 & 0 & 1.125 \end{bmatrix} V = \begin{bmatrix} 4 \\ -4 \\ -2 \\ 2 \end{bmatrix}$$

Now we can use MATLAB to solve for the unknown node voltages.

```
>> Y=[1.125,0,0,-0.125;0,0.75,-0.25,0;0,-0.25,0.75,0;-0.125,0,0,1.125]

Y =
```

www.konkur.in

```
    1.1250         0         0   -0.1250
         0    0.7500   -0.2500         0
         0   -0.2500    0.7500         0
   -0.1250         0         0    1.1250

>> I=[4,-4,-2,2]'

I =

     4
    -4
    -2
     2

>> V=inv(Y)*I

V =

    3.8000
   -7.0000
   -5.0000
    2.2000
```

$V_o = V_1 - V_4 = 3.8 - 2.2 =$ **1.6 V**.

www.konkur.in

Chapter 3, Solution 25

Consider the circuit shown below.

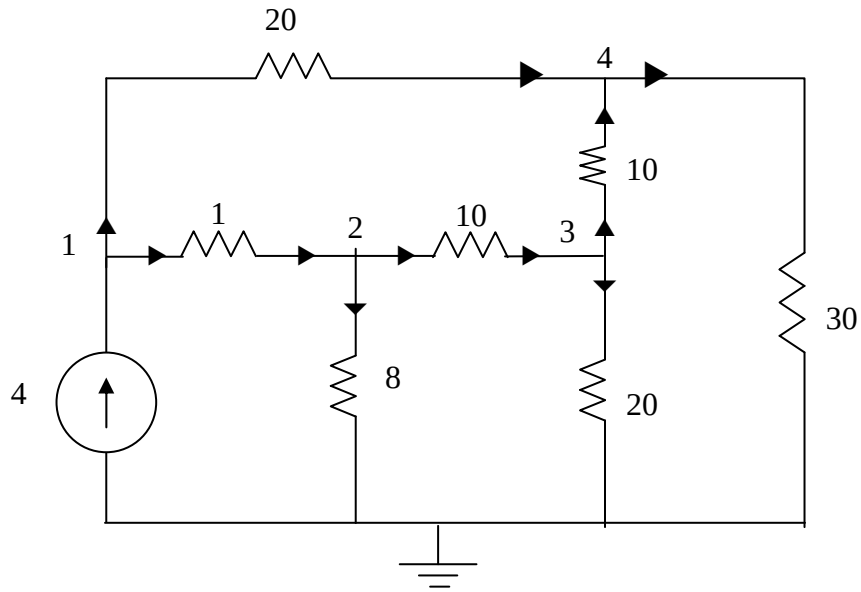

At node 1.

$$4 = \frac{V_1 - V_2}{1} + \frac{V_1 - V_4}{20} \longrightarrow 80 = 21V_1 - 20V_2 - V_4 \qquad (1)$$

At node 2,

$$\frac{V_1 - V_2}{1} = \frac{V_2}{8} + \frac{V_2 - V_3}{10} \longrightarrow 0 = -80V_1 + 98V_2 - 8V_3 \qquad (2)$$

At node 3,

$$\frac{V_2 - V_3}{10} = \frac{V_3}{20} + \frac{V_3 - V_4}{10} \longrightarrow 0 = -2V_2 + 5V_3 - 2V_4 \qquad (3)$$

At node 4,

$$\frac{V_1 - V_4}{20} + \frac{V_3 - V_4}{10} = \frac{V_4}{30} \longrightarrow 0 = 3V_1 + 6V_3 - 11V_4 \qquad (4)$$

Putting (1) to (4) in matrix form gives:

$$\begin{bmatrix} 80 \\ 0 \\ 0 \\ 0 \end{bmatrix} = \begin{bmatrix} 21 & -20 & 0 & -1 \\ -80 & 98 & -8 & 0 \\ 0 & -2 & 5 & -2 \\ 3 & 0 & 6 & -11 \end{bmatrix} \begin{bmatrix} V_1 \\ V_2 \\ V_3 \\ V_4 \end{bmatrix}$$

$$B = A\ V \longrightarrow V = A^{-1} B$$

Using MATLAB leads to

V_1 = **25.52 V**, V_2 = **22.05 V**, V_3 = **14.842 V**, V_4 = **15.055 V**

www.konkur.in

Chapter 3, Solution 26

At node 1,

$$\frac{15-V_1}{20} = 3 + \frac{V_1 - V_3}{10} + \frac{V_1 - V_2}{5} \quad \longrightarrow \quad -45 = 7V_1 - 4V_2 - 2V_3 \qquad (1)$$

At node 2,

$$\frac{V_1 - V_2}{5} + \frac{4I_o - V_2}{5} = \frac{V_2 - V_3}{5} \qquad (2)$$

But $I_o = \dfrac{V_1 - V_3}{10}$. Hence, (2) becomes

$$0 = 7V_1 - 15V_2 + 3V_3 \qquad (3)$$

At node 3,

$$3 + \frac{V_1 - V_3}{10} + \frac{-10 - V_3}{15} + \frac{V_2 - V_3}{5} = 0 \quad \longrightarrow \quad 70 = -3V_1 - 6V_2 + 11V_3 \qquad (4)$$

Putting (1), (3), and (4) in matrix form produces

$$\begin{pmatrix} 7 & -4 & -2 \\ 7 & -15 & 3 \\ -3 & -6 & 11 \end{pmatrix} \begin{pmatrix} V_1 \\ V_2 \\ V_3 \end{pmatrix} = \begin{pmatrix} -45 \\ 0 \\ 70 \end{pmatrix} \quad \longrightarrow \quad AV = B$$

Using MATLAB leads to

$$V = A^{-1}B = \begin{pmatrix} -7.19 \\ -2.78 \\ 2.89 \end{pmatrix}$$

Thus,

V_1 = **–7.19V**; V_2 = **–2.78V**; V_3 = **2.89V**.

www.konkur.in

Chapter 3, Solution 27

At node 1,

$$2 = 2v_1 + v_1 - v_2 + (v_1 - v_3)4 + 3i_0, \quad i_0 = 4v_2. \text{ Hence,}$$

$$2 = 7v_1 + 11v_2 - 4v_3 \qquad (1)$$

At node 2,

$$v_1 - v_2 = 4v_2 + v_2 - v_3 \longrightarrow \qquad 0 = -v_1 + 6v_2 - v_3 \qquad (2)$$

At node 3,

$$2v_3 = 4 + v_2 - v_3 + 12v_2 + 4(v_1 - v_3)$$

or

$$-4 = 4v_1 + 13v_2 - 7v_3 \qquad (3)$$

In matrix form,

$$\begin{bmatrix} 7 & 11 & -4 \\ 1 & -6 & 1 \\ 4 & 13 & -7 \end{bmatrix} \begin{bmatrix} v_1 \\ v_2 \\ v_3 \end{bmatrix} = \begin{bmatrix} 2 \\ 0 \\ -4 \end{bmatrix}$$

$$\Delta = \begin{vmatrix} 7 & 11 & -4 \\ 1 & -6 & 1 \\ 4 & 13 & -7 \end{vmatrix} = 176, \quad \Delta_1 = \begin{vmatrix} 2 & 11 & -4 \\ 0 & -6 & 1 \\ -4 & 13 & -7 \end{vmatrix} = 110$$

$$\Delta_2 = \begin{vmatrix} 7 & 2 & -4 \\ 1 & 0 & 1 \\ 4 & -4 & -7 \end{vmatrix} = 66, \quad \Delta_3 = \begin{vmatrix} 7 & 11 & 2 \\ 1 & -6 & 0 \\ 4 & 13 & -4 \end{vmatrix} = 286$$

$$v_1 = \frac{\Delta_1}{\Delta} = \frac{110}{176} = 0.625\text{V}, \quad v_2 = \frac{\Delta_2}{\Delta} = \frac{66}{176} = 0.375\text{V}$$

$$v_3 = \frac{\Delta_3}{\Delta} = \frac{286}{176} = 1.625\text{V}.$$

v_1 = **625 mV**, v_2 = **375 mV**, v_3 = **1.625 V**.

www.konkur.in

Chapter 3, Solution 28

At node c,

$$\frac{V_d - V_c}{10} = \frac{V_c - V_b}{4} + \frac{V_c}{5} \longrightarrow 0 = -5V_b + 11V_c - 2V_d \qquad (1)$$

At node b,

$$\frac{V_a + 90 - V_b}{8} + \frac{V_c - V_b}{4} = \frac{V_b}{8} \longrightarrow -90 = V_a - 4V_b + 2V_c \quad (2)$$

At node a,

$$\frac{V_a - 60 - V_d}{4} + \frac{V_a}{16} + \frac{V_a + 90 - V_b}{8} = 0 \longrightarrow 60 = 7V_a - 2V_b - 4V_d \quad (3)$$

At node d,

$$\frac{V_a - 60 - V_d}{4} = \frac{V_d}{20} + \frac{V_d - V_c}{10} \longrightarrow 300 = 5V_a + 2V_c - 8V_d \quad (4)$$

In matrix form, (1) to (4) become

$$\begin{pmatrix} 0 & -5 & 11 & -2 \\ 1 & -4 & 2 & 0 \\ 7 & -2 & 0 & -4 \\ 5 & 0 & 2 & -8 \end{pmatrix} \begin{pmatrix} V_a \\ V_b \\ V_c \\ V_d \end{pmatrix} = \begin{pmatrix} 0 \\ -90 \\ 60 \\ 300 \end{pmatrix} \longrightarrow AV = B$$

We use MATLAB to invert A and obtain

$$V = A^{-1}B = \begin{pmatrix} -10.56 \\ 20.56 \\ 1.389 \\ -43.75 \end{pmatrix}$$

Thus,

V_a = **–10.56 V**; V_b = **20.56 V**; V_c = **1.389 V**; VC_d = **–43.75 V**.

www.konkur.in

Chapter 3, Solution 29

At node 1,

$$5 + V_1 - V_4 + 2V_1 + V_1 - V_2 = 0 \quad \longrightarrow \quad -5 = 4V_1 - V_2 - V_4 \qquad (1)$$

At node 2,

$$V_1 - V_2 = 2V_2 + 4(V_2 - V_3) = 0 \quad \longrightarrow \quad 0 = -V_1 + 7V_2 - 4V_3 \qquad (2)$$

At node 3,

$$6 + 4(V_2 - V_3) = V_3 - V_4 \quad \longrightarrow \quad 6 = -4V_2 + 5V_3 - V_4 \qquad (3)$$

At node 4,

$$2 + V_3 - V_4 + V_1 - V_4 = 3V_4 \quad \longrightarrow \quad 2 = -V_1 - V_3 + 5V_4 \qquad (4)$$

In matrix form, (1) to (4) become

$$\begin{pmatrix} 4 & -1 & 0 & -1 \\ -1 & 7 & -4 & 0 \\ 0 & -4 & 5 & -1 \\ -1 & 0 & -1 & 5 \end{pmatrix} \begin{pmatrix} V_1 \\ V_2 \\ V_3 \\ V_4 \end{pmatrix} = \begin{pmatrix} -5 \\ 0 \\ 6 \\ 2 \end{pmatrix} \quad \longrightarrow \quad AV = B$$

Using MATLAB,

$$V = A^{-1}B = \begin{pmatrix} -0.7708 \\ 1.209 \\ 2.309 \\ 0.7076 \end{pmatrix}$$

i.e.

$$\underline{\boldsymbol{V_1 = -0.7708\ \text{V},\ V_2 = 1.209\ \text{V},\ V_3 = 2.309\ \text{V},\ V_4 = 0.7076\ \text{V}}}$$

www.konkur.in

Chapter 3, Solution 30

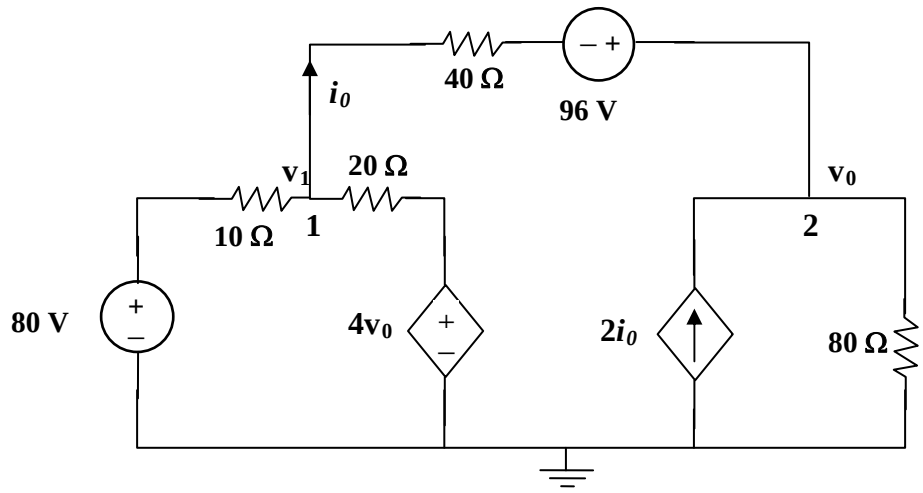

At node 1,

$$[(v_1-80)/10]+[(v_1-4v_o)/20]+[(v_1-(v_o-96))/40] = 0 \text{ or}$$
$$(0.1+0.05+0.025)v_1 - (0.2+0.025)v_o =$$
$$0.175v_1 - 0.225v_o = 8-2.4 = 5.6 \qquad (1)$$

At node 2,

$$-2\boldsymbol{i_o} + [((v_o-96)-v_1)/40] + [(v_o-0)/80] = 0 \text{ and } \boldsymbol{i_o} = [(v_1-(v_o-96))/40]$$
$$-2[(v_1-(v_o-96))/40] + [((v_o-96)-v_1)/40] + [(v_o-0)/80] = 0$$
$$-3[(v_1-(v_o-96))/40] + [(v_o-0)/80] = 0 \text{ or}$$
$$-0.0.075v_1 + (0.075+0.0125)v_o = 7.2 =$$
$$-0.075v_1 + 0.0875v_o = 7.2 \qquad (2)$$

Using (1) and (2) we get,

$$\begin{bmatrix} 0.175 & -0.225 \\ -0.075 & 0.0875 \end{bmatrix}\begin{bmatrix} v_1 \\ v_o \end{bmatrix} = \begin{bmatrix} 5.6 \\ 7.2 \end{bmatrix} \; or$$

$$\begin{bmatrix} v_1 \\ v_o \end{bmatrix} = \frac{\begin{bmatrix} 0.0875 & 0.225 \\ 0.075 & 0.175 \end{bmatrix}}{0.0153125-0.016875}\begin{bmatrix} 5.6 \\ 7.2 \end{bmatrix} = \frac{\begin{bmatrix} 0.0875 & 0.225 \\ 0.075 & 0.175 \end{bmatrix}}{-0.0015625}\begin{bmatrix} 5.6 \\ 7.2 \end{bmatrix}$$

$v_1 = -313.6-1036.8 = -1350.4$

$$v_o = -268.8-806.4 = \mathbf{-1.0752\ kV}$$

and $\boldsymbol{i_o} = [(v_1-(v_o-96))/40] = [(-1350.4-(-1075.2-96))/40] =$ **–4.48 amps**.

www.konkur.in

Chapter 3, Solution 31

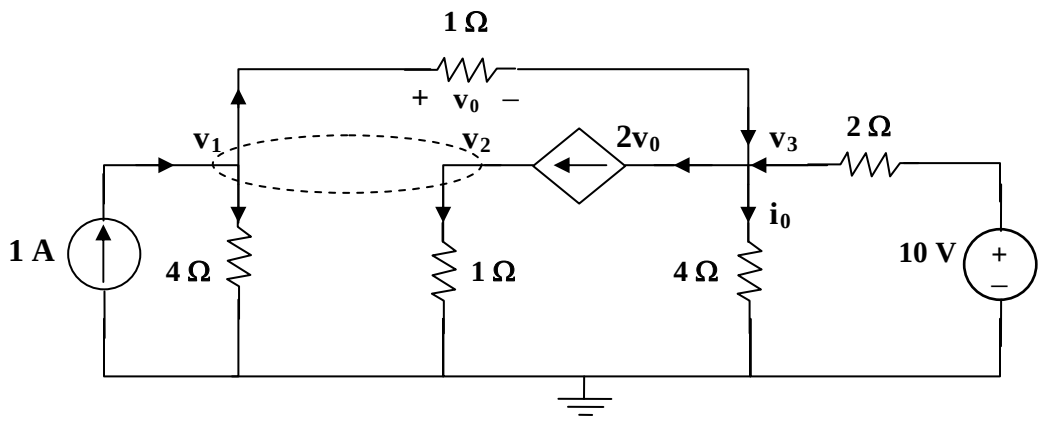

At the supernode,

$$1 + 2v_0 = \frac{v_1}{4} + \frac{v_2}{1} + \frac{v_1 - v_3}{1} \qquad (1)$$

But $v_o = v_1 - v_3$. Hence (1) becomes,

$$4 = -3v_1 + 4v_2 + 4v_3 \qquad (2)$$

At node 3,

$$2v_o + \frac{v_3}{4} = v_1 - v_3 + \frac{10 - v_3}{2}$$

or

$$20 = 4v_1 + 0v_2 - v_3 \qquad (3)$$

At the supernode, $v_2 = v_1 + 4i_o$. But $i_o = \frac{v_3}{4}$. Hence,

$$v_2 = v_1 + v_3 \qquad (4)$$

Solving (2) to (4) leads to,

$$v_1 = \mathbf{4.97V},\ v_2 = \mathbf{4.85V},\ v_3 = \mathbf{-0.12V}.$$

www.konkur.in

Chapter 3, Solution 32

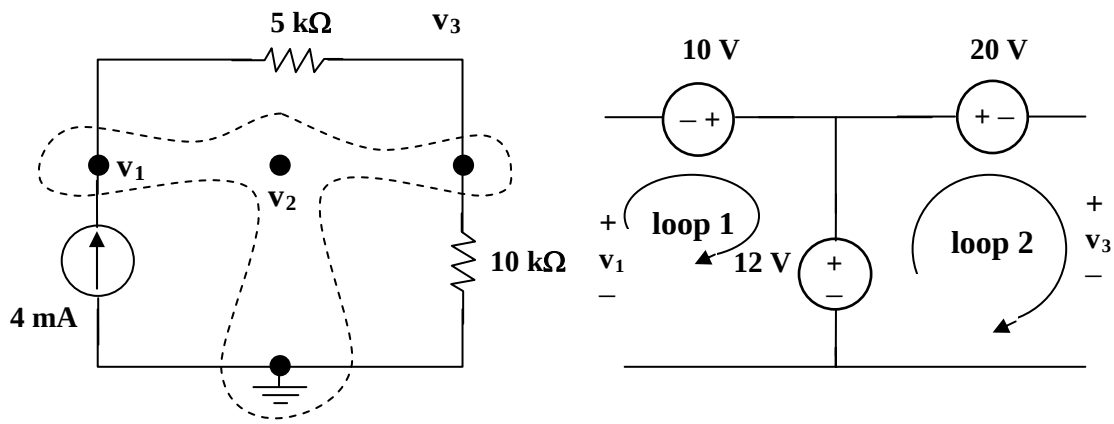

(a) **(b)**

We have a supernode as shown in figure (a). It is evident that v_2 = 12 V, Applying KVL to loops 1and 2 in figure (b), we obtain,

$$-v_1 - 10 + 12 = 0 \text{ or } v_1 = 2 \text{ and } -12 + 20 + v_3 = 0 \text{ or } v_3 = -8 \text{ V}$$

Thus, v_1 = **2 V**, v_2 = **12 V**, v_3 = **-8V**.

www.konkur.in

Chapter 3, Solution 33

(a) This is a **planar** circuit. It can be redrawn as shown below.

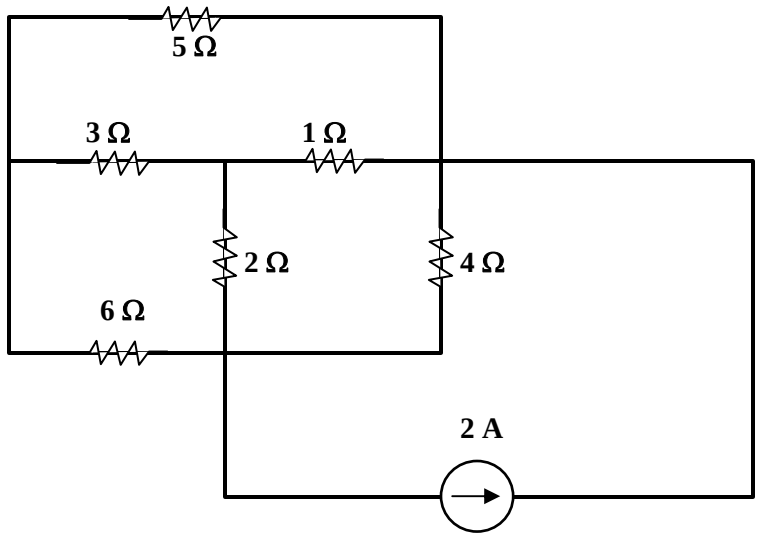

(b) This is a **planar** circuit. It can be redrawn as shown below.

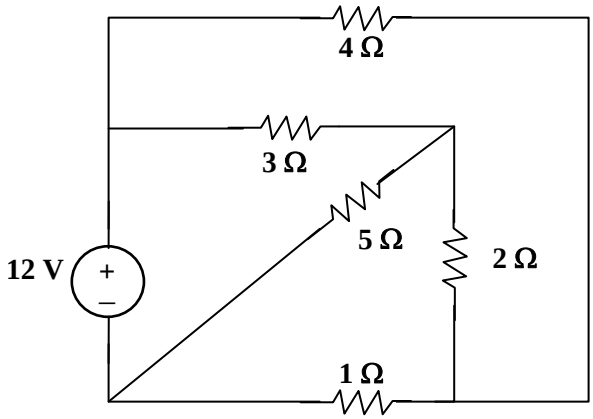

www.konkur.in

Chapter 3, Solution 34

(a) This is a **planar** circuit because it can be redrawn as shown below,

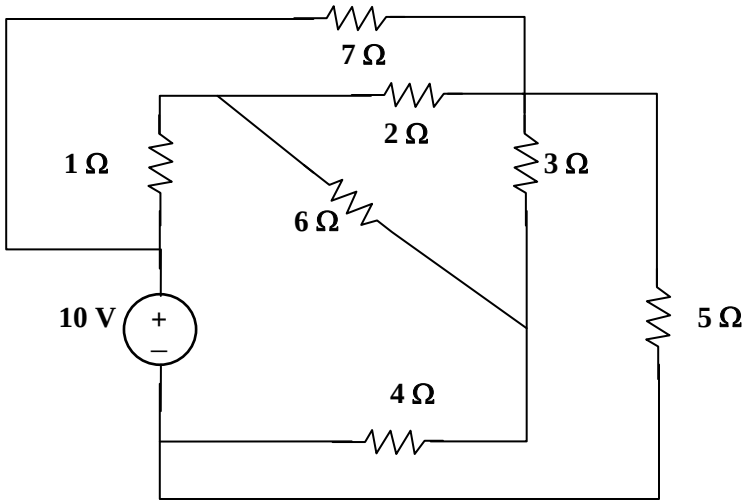

(b) This is a **non-planar** circuit.

www.konkur.in

Chapter 3, Solution 35

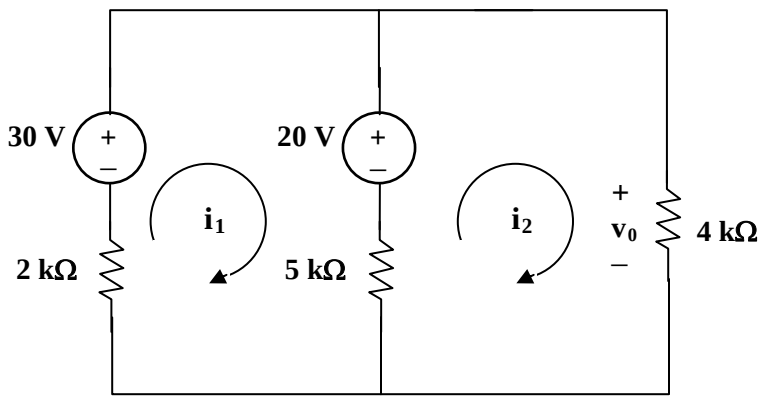

Assume that i_1 and i_2 are in mA. We apply mesh analysis. For mesh 1,

$$-30 + 20 + 7i_1 - 5i_2 = 0 \quad \text{or} \quad 7i_1 - 5i_2 = 10 \qquad (1)$$

For mesh 2,

$$-20 + 9i_2 - 5i_1 = 0 \quad \text{or} \quad -5i_1 + 9i_2 = 20 \qquad (2)$$

Solving (1) and (2), we obtain, $i_2 = 5$.

$$v_0 = 4i_2 = \mathbf{20\ volts}.$$

www.konkur.in

Chapter 3, Solution 36

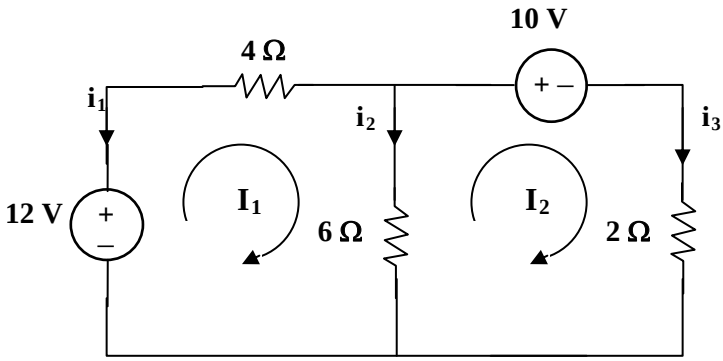

Applying mesh analysis gives,

$$10I_1 - 6I_2 = 12 \text{ and } -6I_1 + 8I_2 = -10$$

or
$$\begin{bmatrix} 6 \\ -5 \end{bmatrix} = \begin{bmatrix} 5 & -3 \\ -3 & 4 \end{bmatrix} \begin{bmatrix} I_1 \\ I_2 \end{bmatrix} = \begin{bmatrix} 6 \\ -5 \end{bmatrix} \text{ or } \begin{bmatrix} I_1 \\ I_2 \end{bmatrix} = \frac{\begin{bmatrix} 4 & 3 \\ 3 & 5 \end{bmatrix}}{11} \begin{bmatrix} 6 \\ -5 \end{bmatrix}$$

$$I_1 = (24–15)/11 = 0.8182 \text{ and } I_2 = (18–25)/11 = –0.6364$$

$i_1 = –I_1 =$ **–818.2 mA**; $i_2 = I_1 – I_2 = 0.8182+0.6364 =$ **1.4546 A**; and $i_3 = I_2 =$ **–636.4 mA**.

www.konkur.in

Chapter 3, Solution 37

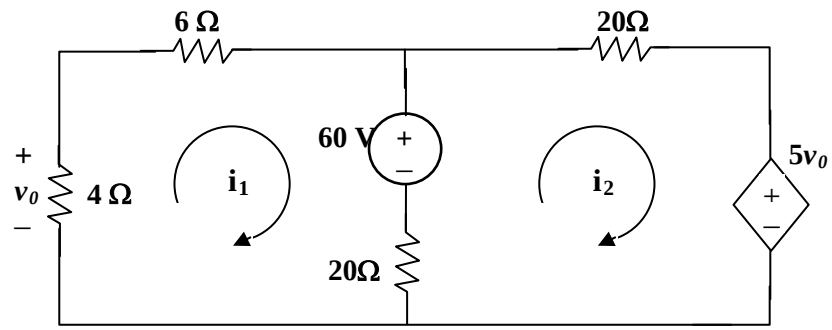

Applying mesh analysis to loops 1 and 2, we get,

$$30i_1 - 20i_2 + 60 = 0 \quad \text{which leads to} \quad i_2 = 1.5i_1 + 3 \qquad (1)$$

$$-20i_1 + 40i_2 - 60 + 5v_0 = 0 \qquad (2)$$

$$\text{But, } v_0 = -4i_1 \qquad (3)$$

Using (1), (2), and (3) we get $-20i_1 + 60i_1 + 120 - 60 - 20i_1 = 0$ or

$$20i_1 = -60 \text{ or } i_1 = -3 \text{ amps and } i_2 = 7.5 \text{ amps.}$$

Therefore, we get,

$$v_0 = -4i_1 = \mathbf{12\ volts}.$$

Chapter 3, Solution 38

Consider the circuit below with the mesh currents.

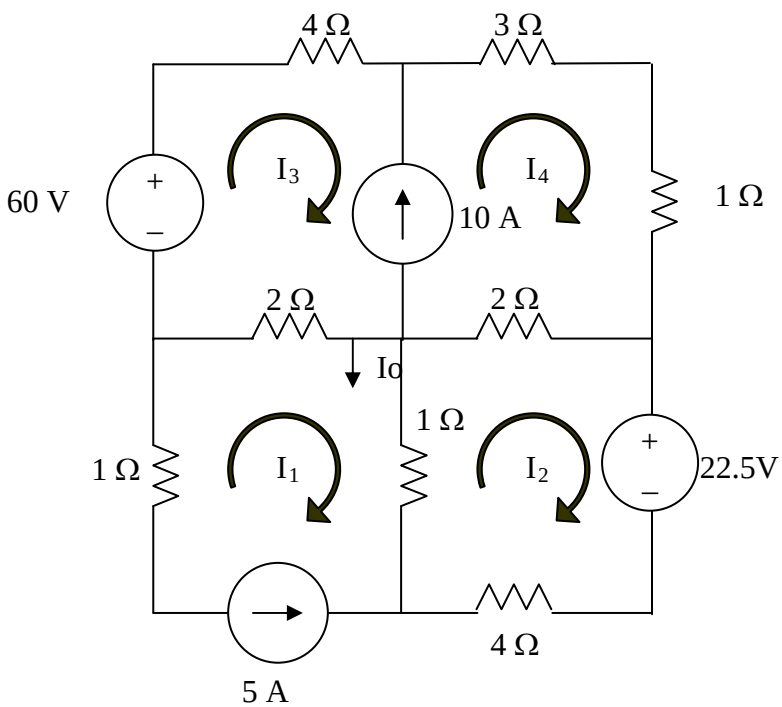

$I_1 = -5$ A (1)

$1(I_2-I_1) + 2(I_2-I_4) + 22.5 + 4I_2 = 0$
$7I_2 - I_4 = -27.5$ (2)

$-60 + 4I_3 + 3I_4 + 1I_4 + 2(I_4-I_2) + 2(I_3 - I_1) = 0$ (super mesh)
$-2I_2 + 6I_3 + 6I_4 = +60 - 10 = 50$ (3)

But, we need one more equation, so we use the constraint equation $-I_3 + I_4 = 10$. This now gives us three equations with three unknowns.

$$\begin{bmatrix} 7 & 0 & -1 \\ -2 & 6 & 6 \\ 0 & -1 & 1 \end{bmatrix}\begin{bmatrix} I_2 \\ I_3 \\ I_4 \end{bmatrix} = \begin{bmatrix} -27.5 \\ 50 \\ 10 \end{bmatrix}$$

We can now use MATLAB to solve the problem.

```
>> Z=[7,0,-1;-2,6,6;0,-1,0]
```

www.konkur.in

```
Z =

     7     0    -1
    -2     6     6
     0    -1     0
>> V=[–27.5,50,10]'

V =
   –27.5
    50
    10
>> I=inv(Z)*V

I =
   –1.3750
   –10.0000
    17.8750
```

$I_o = I_1 – I_2 = –5 – 1.375 =$ **–6.375 A**.

Check using the super mesh (equation (3)):

$–2I_2 + 6\ I_3 + 6I_4 = 2.75 – 60 + 107.25 = 50!$

www.konkur.in

Chapter 3, Solution 39

Using Fig. 3.50 from Prob. 3.1, design a problem to help other students to better understand mesh analysis.

Solution

Given $R_1 = 4\ k\Omega$, $R_2 = 2\ k\Omega$, and $R_3 = 2\ k\Omega$, determine the value of I_x using mesh analysis.

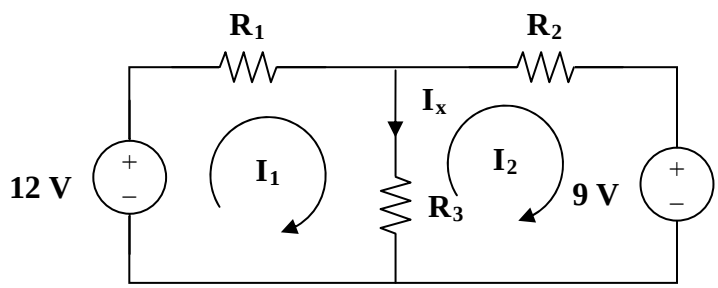

Figure 3.50
For Prob. 3.1 and 3.39.

For loop 1 we get $-12 + 4kI_1 + 2k(I_1 - I_2) = 0$ or $6I_1 - 2I_2 = 0.012$ and at

loop 2 we get $2k(I_2 - I_1) + 2kI_2 + 9 = 0$ or $-2I_1 + 4I_2 = -0.009$.

Now $6I_1 - 2I_2 = 0.012 + 3[-2I_1 + 4I_2 = -0.009]$ leads to,

$10I_2 = 0.012 - 0.027 = -0.015$ or $I_2 = -1.5$ mA and $I_1 = (-0.003+0.012)/6 = 1.5$ mA.

Thus,

$$I_x = I_1 - I_2 = (1.5+1.5)\ \text{mA} = \mathbf{3\ mA}.$$

www.konkur.in

Chapter 3, Solution 40

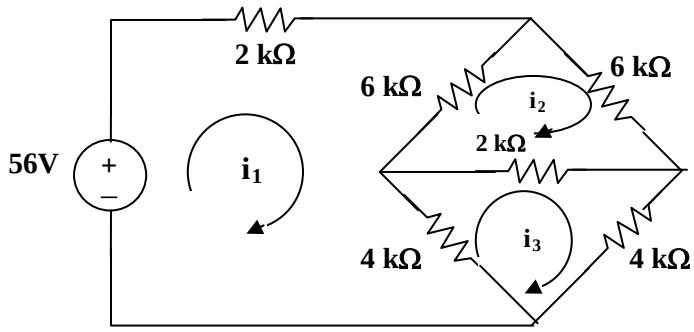

Assume all currents are in mA and apply mesh analysis for mesh 1.

$$-56 + 12i_1 - 6i_2 - 4i_3 = 0 \text{ or } 6i_1 - 3i_2 - 2i_3 = 28 \qquad (1)$$

for mesh 2,

$$-6i_1 + 14i_2 - 2i_3 = 0 \text{ or } -3i_1 + 7i_2 - i_3 = 0 \qquad (2)$$

for mesh 3,

$$-4i_1 - 2i_2 + 10i_3 = 0 \text{ or } -2i_1 - i_2 + 5i_3 = 0 \qquad (3)$$

Solving (1), (2), and (3) using MATLAB, we obtain,

$$\boldsymbol{i_o} = i_1 = \mathbf{8\ mA}.$$

Chapter 3, Solution 41

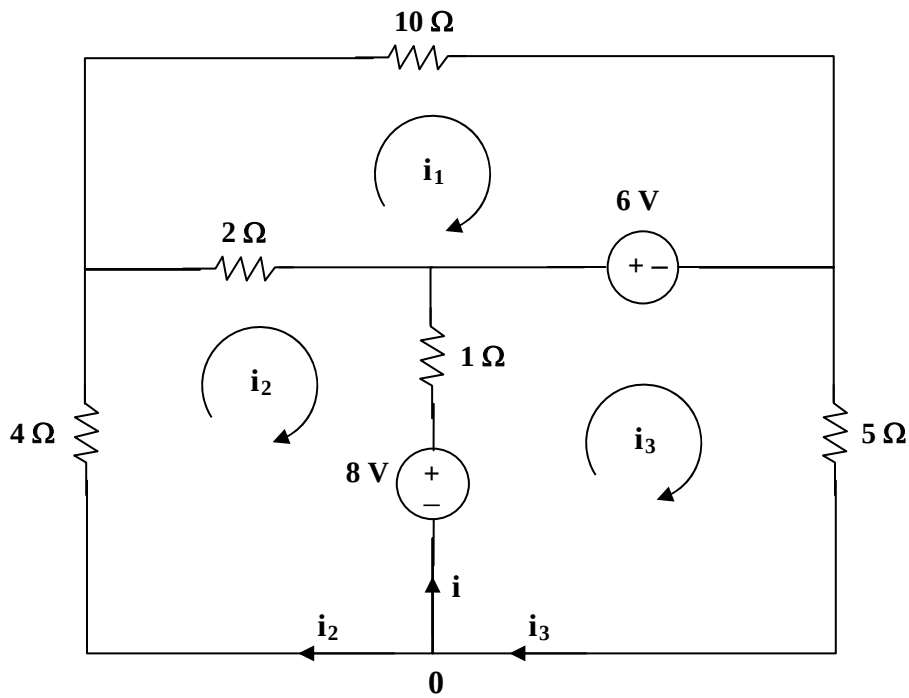

For loop 1,

$$6 = 12i_1 - 2i_2 \longrightarrow 3 = 6i_1 - i_2 \qquad (1)$$

For loop 2,

$$-8 = -2i_1 + 7i_2 - i_3 \qquad (2)$$

For loop 3,

$$-8 + 6 + 6i_3 - i_2 = 0 \longrightarrow 2 = -i_2 + 6i_3 \qquad (3)$$

We put (1), (2), and (3) in matrix form,

$$\begin{bmatrix} 6 & -1 & 0 \\ 2 & -7 & 1 \\ 0 & -1 & 6 \end{bmatrix} \begin{bmatrix} i_1 \\ i_2 \\ i_3 \end{bmatrix} = \begin{bmatrix} 3 \\ 8 \\ 2 \end{bmatrix}$$

$$\Delta = \begin{vmatrix} 6 & -1 & 0 \\ 2 & -7 & 1 \\ 0 & -1 & 6 \end{vmatrix} = -234, \quad \Delta_2 = \begin{vmatrix} 6 & 3 & 0 \\ 2 & 8 & 1 \\ 0 & 2 & 6 \end{vmatrix} = 240$$

www.konkur.in

$$\Delta_3 = \begin{vmatrix} 6 & -1 & 3 \\ 2 & -7 & 8 \\ 0 & -1 & 2 \end{vmatrix} = -38$$

At node 0, $i + i_2 = i_3$ or $i = i_3 - i_2 = \dfrac{\Delta_3 - \Delta_2}{\Delta} = \dfrac{-38 - 240}{-234} =$ **1.188 A**

www.konkur.in

Chapter 3, Solution 42

Although there are many ways to work this problem, this is an example based on the same kind of problem asked in the third edition.

Problem

Determine the mesh currents in the circuit of Fig. 3.88.

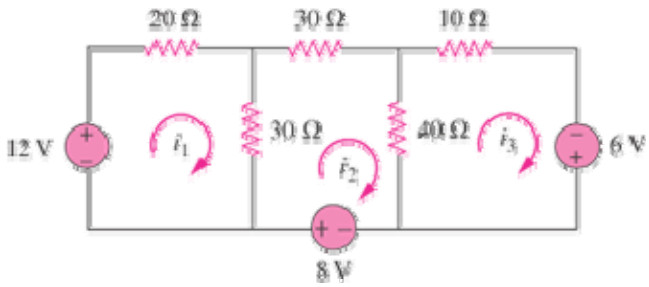

Figure 3.88

Solution

For mesh 1,

$$-12+50I_1-30I_2=0 \quad \longrightarrow \quad 12=50I_1-30I_2 \qquad (1)$$

For mesh 2,

$$-8+100I_2-30I_1-40I_3=0 \quad \longrightarrow \quad 8=-30I_1+100I_2-40I_3 \qquad (2)$$

For mesh 3,

$$-6+50I_3-40I_2=0 \quad \longrightarrow \quad 6=-40I_2+50I_3 \qquad (3)$$

Putting eqs. (1) to (3) in matrix form, we get

$$\begin{pmatrix} 50 & -30 & 0 \\ -30 & 100 & -40 \\ 0 & -40 & 50 \end{pmatrix}\begin{pmatrix} I_1 \\ I_2 \\ I_3 \end{pmatrix}=\begin{pmatrix} 12 \\ 8 \\ 6 \end{pmatrix} \quad \longrightarrow \quad AI=B$$

Using Matlab,

$$I=A^{-1}B=\begin{pmatrix} 0.48 \\ 0.40 \\ 0.44 \end{pmatrix}$$

i.e. I_1 = **480 mA**, I_2 = **400 mA**, I_3 = **440 mA**

www.konkur.in

Chapter 3, Solution 43

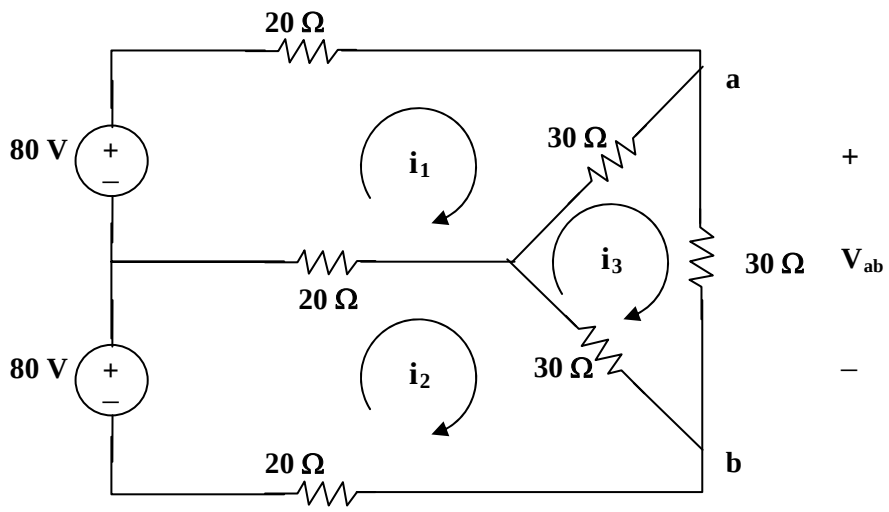

For loop 1,

$$80 = 70i_1 - 20i_2 - 30i_3 \longrightarrow 8 = 7i_1 - 2i_2 - 3i_3 \qquad (1)$$

For loop 2,

$$80 = 70i_2 - 20i_1 - 30i_3 \longrightarrow 8 = -2i_1 + 7i_2 - 3i_3 \qquad (2)$$

For loop 3,

$$0 = -30i_1 - 30i_2 + 90i_3 \longrightarrow 0 = i_1 + i_2 - 3i_3 \qquad (3)$$

Solving (1) to (3), we obtain $i_3 = 16/9$

$$I_o = i_3 = 16/9 = \mathbf{1.7778\ A}$$

$$V_{ab} = 30i_3 = \mathbf{53.33\ V}.$$

www.konkur.in

Chapter 3, Solution 44

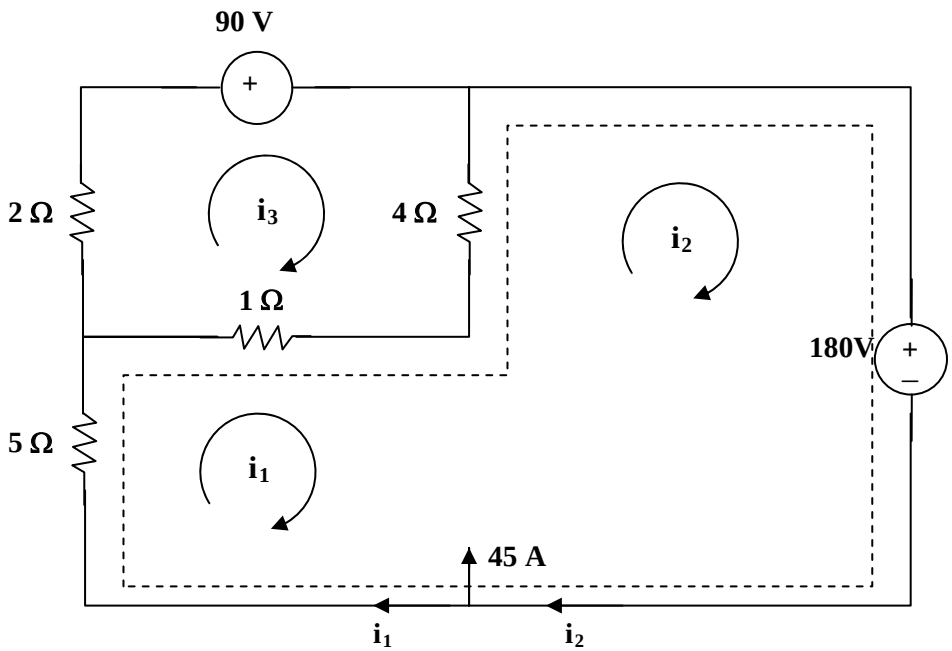

Loop 1 and 2 form a supermesh. For the supermesh,

$$6i_1 + 4i_2 - 5i_3 + 180 = 0 \qquad (1)$$

For loop 3, $$-i_1 - 4i_2 + 7i_3 + 90 = 0 \qquad (2)$$

Also, $$i_2 = 45 + i_1 \qquad (3)$$

Solving (1) to (3), $i_1 = -46$, $i_3 = -20$; $i_o = i_1 - i_3 =$ **–26 A**

www.konkur.in

Chapter 3, Solution 45

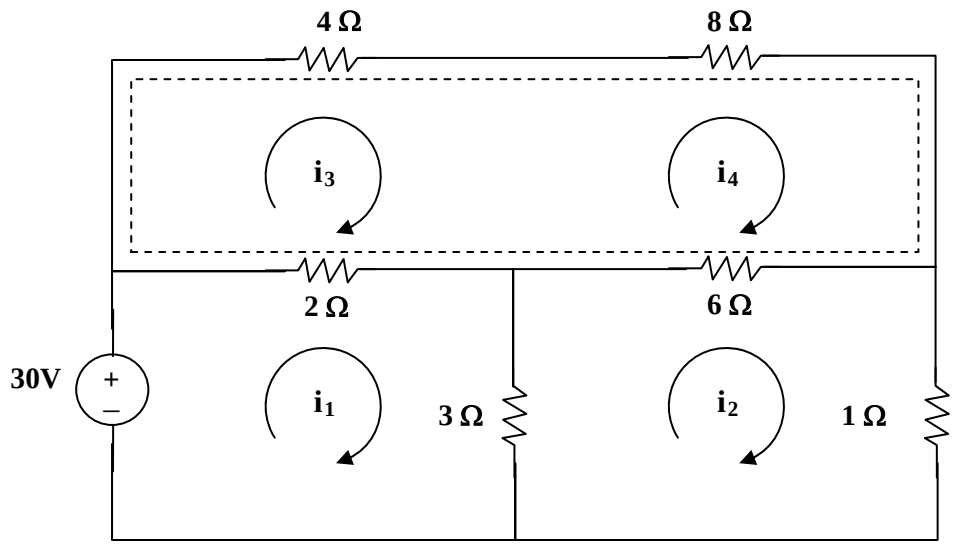

For loop 1, $30 = 5i_1 - 3i_2 - 2i_3$ (1)

For loop 2, $10i_2 - 3i_1 - 6i_4 = 0$ (2)

For the supermesh, $6i_3 + 14i_4 - 2i_1 - 6i_2 = 0$ (3)

But $i_4 - i_3 = 4$ which leads to $i_4 = i_3 + 4$ (4)

Solving (1) to (4) by elimination gives $i = i_1 =$ **8.561 A**.

www.konkur.in

Chapter 3, Solution 46

For loop 1,

$$-12+3i_1+8(i_1-i_2)=-12+11i_1-8i_2=0 \quad \longrightarrow \quad 11i_1-8i_2=12 \qquad (1)$$

For loop 2,

$$8(i_2-i_1)+6i_2+2v_o=-8i_1+14i_2+2v_o=0$$

But $v_o=3i_1$,

$$-8i_1+14i_2+6i_1=0 \quad \longrightarrow \quad i_1=7i_2 \qquad (2)$$

Substituting (2) into (1),

$$77i_2-8i_2=12 \quad \longrightarrow \quad \underline{i_2=0.1739}\text{ A and } \underline{i_1=7i_2=1.217}\text{ A}$$

Chapter 3, Solution 47

First, transform the current sources as shown below.

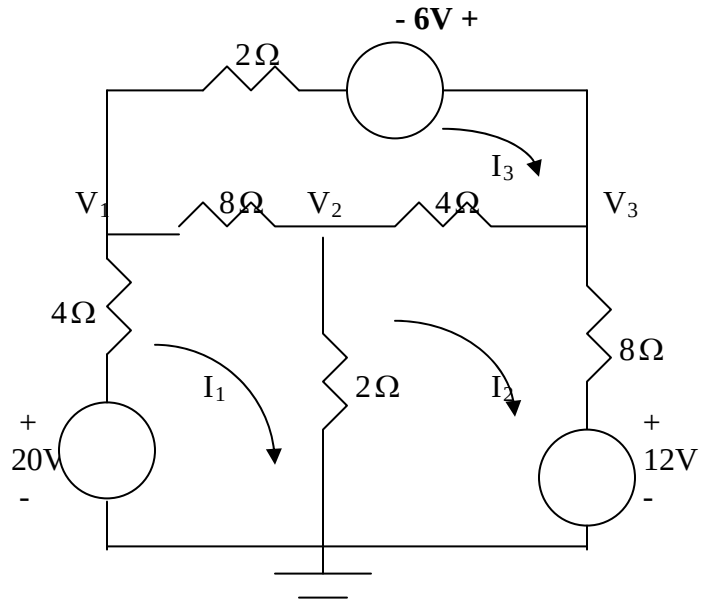

For mesh 1,

$$-20+14I_1-2I_2-8I_3=0 \quad \longrightarrow \quad 10=7I_1-I_2-4I_3 \qquad (1)$$

For mesh 2,

$$12+14I_2-2I_1-4I_3=0 \quad \longrightarrow \quad -6=-I_1+7I_2-2I_3 \qquad (2)$$

For mesh 3,

$$-6+14I_3-4I_2-8I_1=0 \quad \longrightarrow \quad 3=-4I_1-2I_2+7I_3 \qquad (3)$$

Putting (1) to (3) in matrix form, we obtain

$$\begin{pmatrix} 7 & -1 & -4 \\ -1 & 7 & -2 \\ -4 & -2 & 7 \end{pmatrix}\begin{pmatrix} I_1 \\ I_2 \\ I_3 \end{pmatrix}=\begin{pmatrix} 10 \\ -6 \\ 3 \end{pmatrix} \quad \longrightarrow \quad AI=B$$

Using MATLAB,

$$I=A^{-1}B=\begin{bmatrix} 2 \\ 0.0333 \\ 1.8667 \end{bmatrix} \quad \longrightarrow \quad I_1=2.5,\ I_2=0.0333, I_3=1.8667$$

But

www.konkur.in

$$I_1 = \frac{20 - V}{4} \longrightarrow V_1 = 20 - 4I_1 = \mathbf{10\ V}$$

$$V_2 = 2(I_1 - I_2) = \mathbf{4.933\ V}$$

Also,

$$I_2 = \frac{V_3 - 12}{8} \longrightarrow V_3 = 12 + 8I_2 = \mathbf{12.267\ V}.$$

www.konkur.in

Chapter 3, Solution 48

We apply mesh analysis and let the mesh currents be in mA.

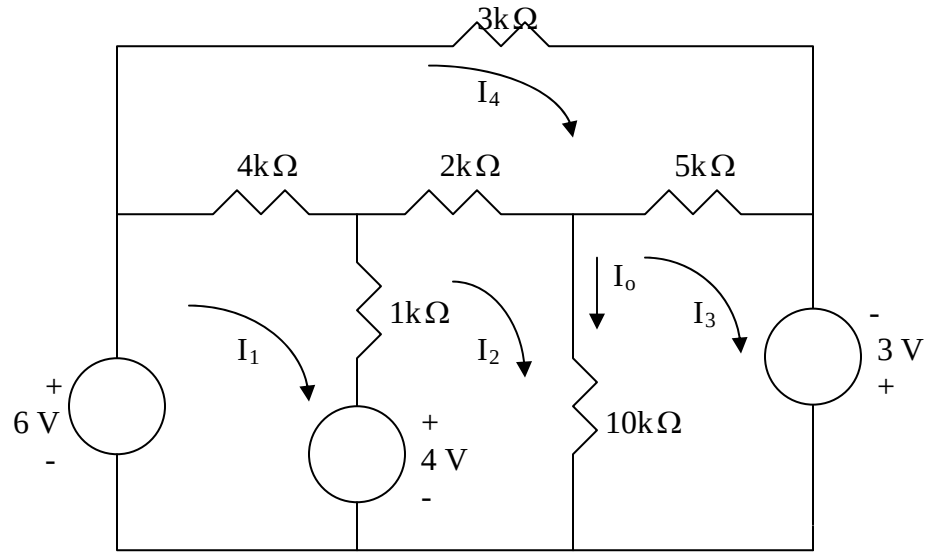

For mesh 1,

$$-6+8+5I_1-I_2-4I_4=0 \quad \longrightarrow \quad 2=5I_1-I_2-4I_4 \qquad (1)$$

For mesh 2,

$$-4+13I_2-I_1-10I_3-2I_4=0 \quad \longrightarrow \quad 4=-I_1+13I_2-10I_3-2I_4 \qquad (2)$$

For mesh 3,

$$-3+15I_3-10I_2-5I_4=0 \quad \longrightarrow \quad 3=-10I_2+15I_3-5I_4 \qquad (3)$$

For mesh 4,

$$-4I_1-2I_2-5I_3+14I_4=0 \qquad (4)$$

Putting (1) to (4) in matrix form gives

$$\begin{pmatrix} 5 & -1 & 0 & -4 \\ -1 & 13 & -10 & -2 \\ 0 & -10 & 15 & -5 \\ -4 & -2 & -5 & 14 \end{pmatrix}\begin{pmatrix} I_1 \\ I_2 \\ I_3 \\ I_4 \end{pmatrix}=\begin{pmatrix} 2 \\ 4 \\ 3 \\ 0 \end{pmatrix} \quad \longrightarrow \quad AI=B$$

Using MATLAB,

$$I=A^{-1}B=\begin{pmatrix} 3.608 \\ 4.044 \\ 3.896 \\ 3 \end{pmatrix} \; 0.148$$

The current through the 10kΩ resistor is $I_o = I_2 - I_3$ = **148 mA**.

Chapter 3, Solution 49

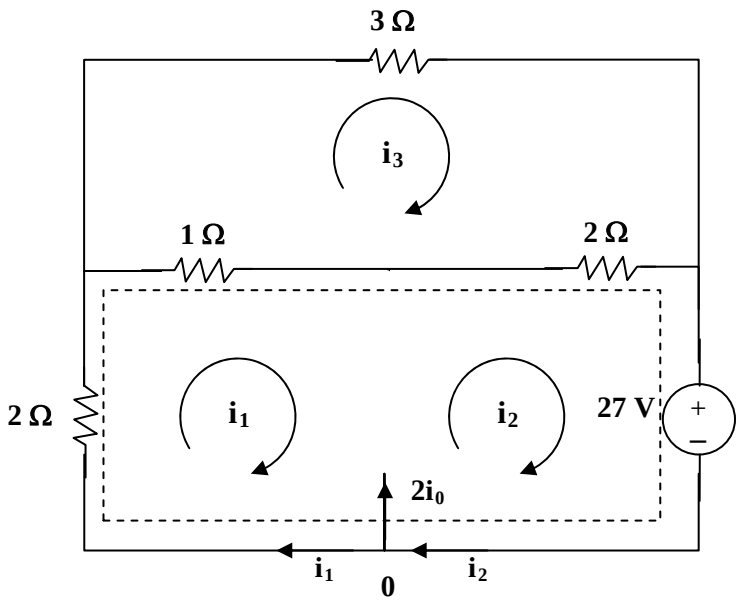

(a)

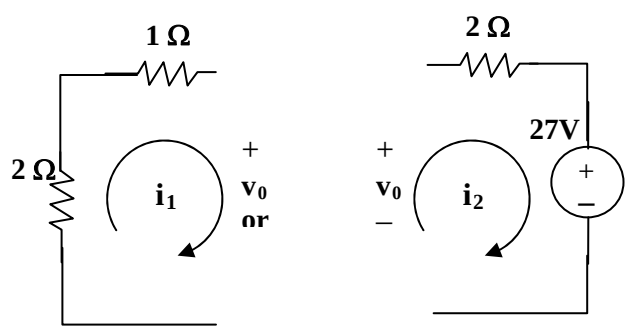

(b)

For the supermesh in figure (a),

$$3i_1 + 2i_2 - 3i_3 + 27 = 0 \qquad (1)$$

At node 0, $i_2 - i_1 = 2i_0$ and $i_0 = -i_1$ which leads to $i_2 = -i_1$ (2)

For loop 3, $-i_1 - 2i_2 + 6i_3 = 0$ which leads to $6i_3 = -i_1$ (3)

Solving (1) to (3), $i_1 = (-54/3)$A, $i_2 = (54/3)$A, $i_3 = (27/9)$A

$i_0 = -i_1 =$ **18 A**, from fig. (b), $v_0 = i_3 - 3i_1 = (27/9) + 54 =$ **57 V**.

www.konkur.in

Chapter 3, Solution 50

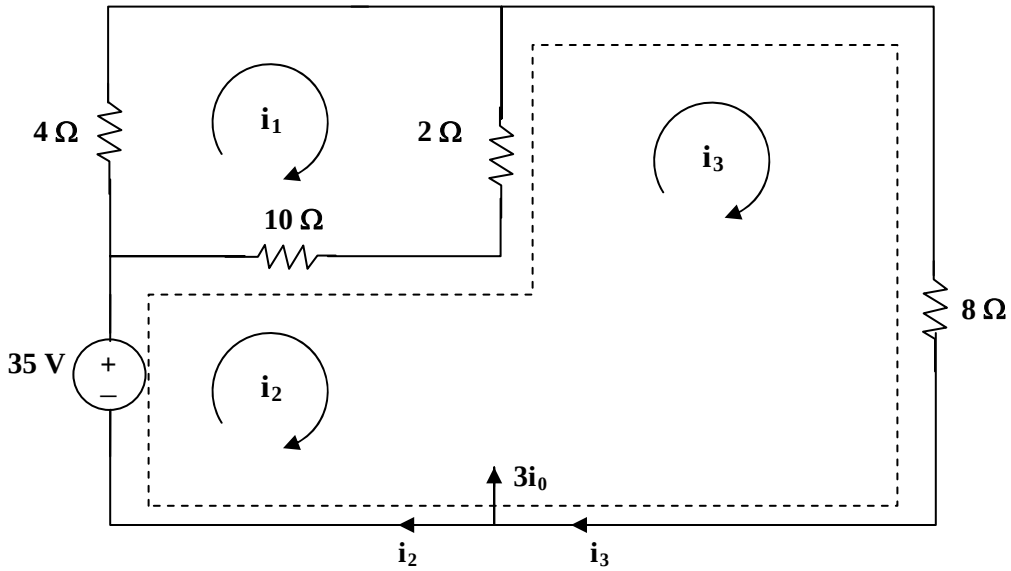

For loop 1, $16i_1 - 10i_2 - 2i_3 = 0$ which leads to $8i_1 - 5i_2 - i_3 = 0$ (1)

For the supermesh, $-35 + 10i_2 - 10i_1 + 10i_3 - 2i_1 = 0$

or $-6i_1 + 5i_2 + 5i_3 = 17.5$ (2)

Also, $3i_0 = i_3 - i_2$ and $i_0 = i_1$ which leads to $3i_1 = i_3 - i_2$ (3)

Solving (1), (2), and (3), we obtain $i_1 = 1.0098$ and

$$i_0 = i_1 = \mathbf{1.0098\ A}$$

www.konkur.in

Chapter 3, Solution 51

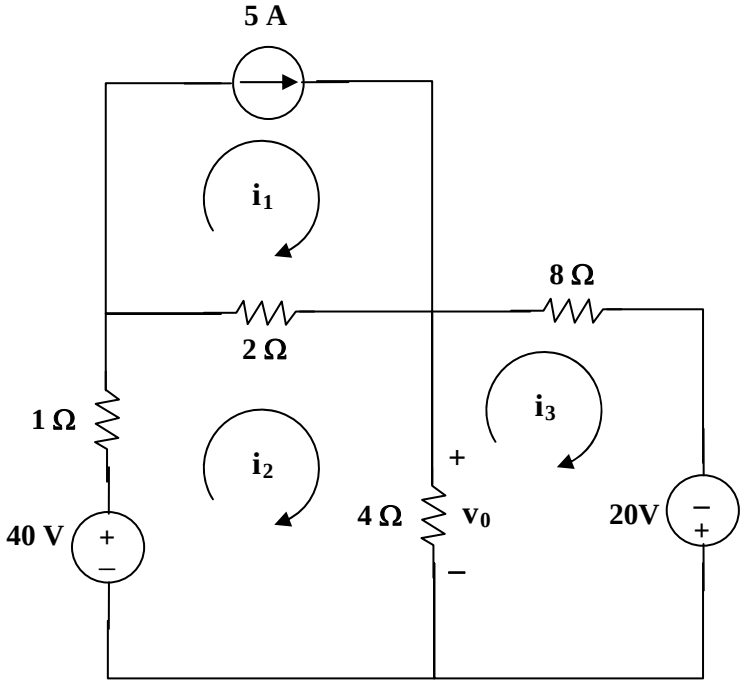

For loop 1, $i_1 = 5A$ (1)

For loop 2, $-40 + 7i_2 - 2i_1 - 4i_3 = 0$ which leads to $50 = 7i_2 - 4i_3$ (2)

For loop 3, $-20 + 12i_3 - 4i_2 = 0$ which leads to $5 = -i_2 + 3i_3$ (3)

Solving with (2) and (3), $i_2 = 10$ A, $i_3 = 5$ A

And, $v_0 = 4(i_2 - i_3) = 4(10 - 5) =$ **20 V**.

www.konkur.in

Chapter 3, Solution 52

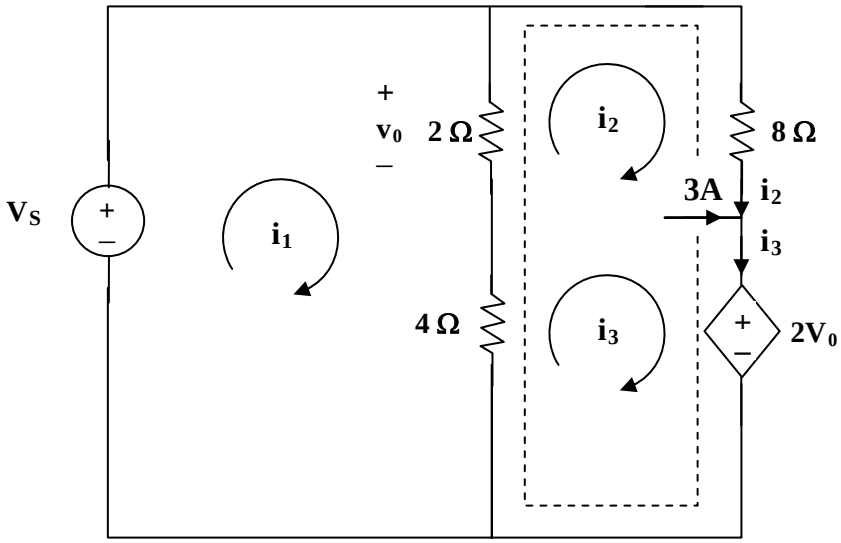

For mesh 1,

$$2(i_1 - i_2) + 4(i_1 - i_3) - 12 = 0 \text{ which leads to } 3i_1 - i_2 - 2i_3 = 6 \qquad (1)$$

For the supermesh, $2(i_2 - i_1) + 8i_2 + 2v_0 + 4(i_3 - i_1) = 0$

But $v_0 = 2(i_1 - i_2)$ which leads to $-i_1 + 3i_2 + 2i_3 = 0$
(2)

For the independent current source, $i_3 = 3 + i_2$ (3)

Solving (1), (2), and (3), we obtain,

i_1 = **3.5 A**, i_2 = **-0.5 A**, i_3 = **2.5 A**.

www.konkur.in

Chapter 3, Solution 53

Applying mesh analysis leads to;

$-12 + 4kI_1 - 3kI_2 - 1kI_3 = 0$ (1)

$-3kI_1 + 7kI_2 - 4kI_4 = 0$

$-3kI_1 + 7kI_2 = -12$ (2)

$-1kI_1 + 15kI_3 - 8kI_4 - 6kI_5 = 0$

$-1kI_1 + 15kI_3 - 6k = -24$ (3)

$I_4 = -3mA$ (4)

$-6kI_3 - 8kI_4 + 16kI_5 = 0$

$-6kI_3 + 16kI_5 = -24$ (5)

Putting these in matrix form (having substituted $I_4 = 3mA$ in the above),

$$\begin{bmatrix} 4 & -3 & -1 & 0 \\ -3 & 7 & 0 & 0 \\ -1 & 0 & 15 & -6 \\ 0 & 0 & -6 & 16 \end{bmatrix} k \begin{bmatrix} I_1 \\ I_2 \\ I_3 \\ I_5 \end{bmatrix} = \begin{bmatrix} 12 \\ -12 \\ -24 \\ -24 \end{bmatrix}$$

$ZI = V$

Using MATLAB,

```
>> Z = [4,-3,-1,0;-3,7,0,0;-1,0,15,-6;0,0,-6,16]

Z =

     4    -3    -1     0
    -3     7     0     0
    -1     0    15    -6
     0     0    -6    16

>> V = [12,-12,-24,-24]'

V =

    12
   -12
   -24
   -24
```

We obtain,

```
>> I = inv(Z)*V
```

www.konkur.in

I =

1.6196 mA
–1.0202 mA
–2.461 mA
3 mA
–2.423 mA

www.konkur.in

Chapter 3, Solution 54

Let the mesh currents be in mA. For mesh 1,

$$-12+10+2I_1-I_2=0 \quad \longrightarrow \quad 2=2I_1-I_2 \qquad (1)$$

For mesh 2,

$$-10+3I_2-I_1-I_3=0 \quad \longrightarrow \quad 10=-I_1+3I_2-I_3 \qquad (2)$$

For mesh 3,

$$-12+2I_3-I_2=0 \quad \longrightarrow \quad 12=-I_2+2I_3 \qquad (3)$$

Putting (1) to (3) in matrix form leads to

$$\begin{pmatrix} 2 & -1 & 0 \\ -1 & 3 & -1 \\ 0 & -1 & 2 \end{pmatrix}\begin{pmatrix} I_1 \\ I_2 \\ I_3 \end{pmatrix}=\begin{pmatrix} 2 \\ 10 \\ 12 \end{pmatrix} \quad \longrightarrow \quad AI=B$$

Using MATLAB,

$$I=A^{-1}B=\begin{bmatrix} 5.25 \\ 8.5 \\ 10.25 \end{bmatrix} \quad \longrightarrow \underline{I_1=5.25\,\text{mA},\ I_2=8.5\,\text{mA}, I_3=10.25\,\text{mA}}$$

I_1 = **5.25 mA**, I_2 = **8.5 mA**, and I_3 = **10.25 mA**.

www.konkur.in

Chapter 3, Solution 55

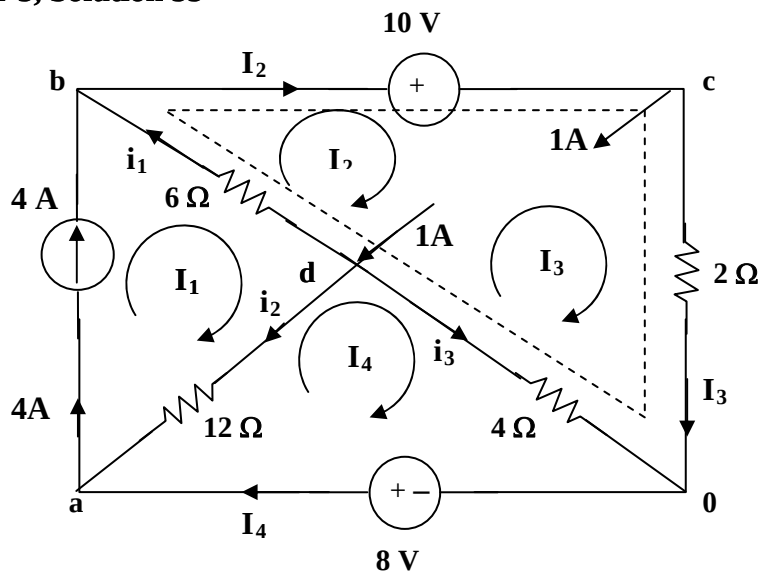

It is evident that $I_1 = 4$ (1)

For mesh 4, $12(I_4 - I_1) + 4(I_4 - I_3) - 8 = 0$ (2)

For the supermesh $6(I_2 - I_1) + 10 + 2I_3 + 4(I_3 - I_4) = 0$
or $-3I_1 + 3I_2 + 3I_3 - 2I_4 = -5$ (3)

At node c, $I_2 = I_3 + 1$ (4)

Solving (1), (2), (3), and (4) yields, $I_1 = 4A$, $I_2 = 3A$, $I_3 = 2A$, and $I_4 = 4A$

At node b, $i_1 = I_2 - I_1 =$ **-1A**

At node a, $i_2 = 4 - I_4 =$ **0A**

At node 0, $i_3 = I_4 - I_3 =$ **2A**

www.konkur.in

Chapter 3, Solution 56

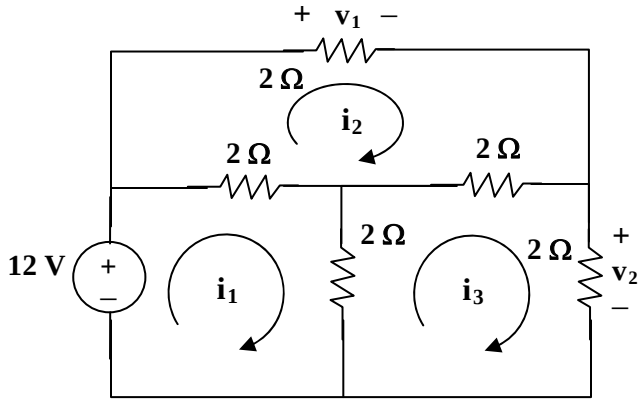

For loop 1, $12 = 4i_1 - 2i_2 - 2i_3$ which leads to $6 = 2i_1 - i_2 - i_3$ (1)

For loop 2, $0 = 6i_2 - 2i_1 - 2i_3$ which leads to $0 = -i_1 + 3i_2 - i_3$ (2)

For loop 3, $0 = 6i_3 - 2i_1 - 2i_2$ which leads to $0 = -i_1 - i_2 + 3i_3$ (3)

In matrix form (1), (2), and (3) become,

$$\begin{bmatrix} 2 & -1 & -1 \\ -1 & 3 & -1 \\ -1 & -1 & 3 \end{bmatrix}\begin{bmatrix} i_1 \\ i_2 \\ i_3 \end{bmatrix} = \begin{bmatrix} 6 \\ 0 \\ 0 \end{bmatrix}$$

$$\Delta = \begin{vmatrix} 2 & -1 & -1 \\ -1 & 3 & -1 \\ -1 & -1 & 3 \end{vmatrix} = 8, \quad \Delta_2 = \begin{vmatrix} 2 & 6 & -1 \\ -1 & 3 & -1 \\ -1 & 0 & 3 \end{vmatrix} = 24$$

$$\Delta_3 = \begin{vmatrix} 2 & -1 & 6 \\ -1 & 3 & 0 \\ -1 & -1 & 0 \end{vmatrix} = 24 \text{, therefore } i_2 = i_3 = 24/8 = 3\text{A},$$

$v_1 = 2i_2 =$ **6 volts**, $v = 2i_3 =$ **6 volts**

www.konkur.in

Chapter 3, Solution 57

Assume R is in kilo-ohms.

$V_2 = 4k\Omega x15mA = \underline{60V}$, $\quad V_1 = 90 - V_2 = 90 - 60 = \underline{30V}$

Current through R is

$i_R = \frac{3}{3+R} i_{o,} \qquad V_1 = i_R R \quad \longrightarrow \quad 30 = \frac{3}{3+R}(15)R$

This leads to R = 90/15 = **6 kΩ**.

www.konkur.in

Chapter 3, Solution 58

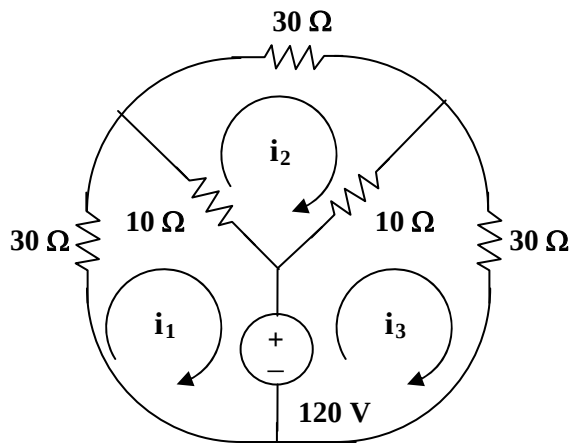

For loop 1, $120 + 40i_1 - 10i_2 = 0$, which leads to $-12 = 4i_1 - i_2$ (1)

For loop 2, $50i_2 - 10i_1 - 10i_3 = 0$, which leads to $-i_1 + 5i_2 - i_3 = 0$ (2)

For loop 3, $-120 - 10i_2 + 40i_3 = 0$, which leads to $12 = -i_2 + 4i_3$ (3)

Solving (1), (2), and (3), we get, i_1 = **-3A**, i_2 = **0**, and i_3 = **3A**

www.konkur.in

Chapter 3, Solution 59

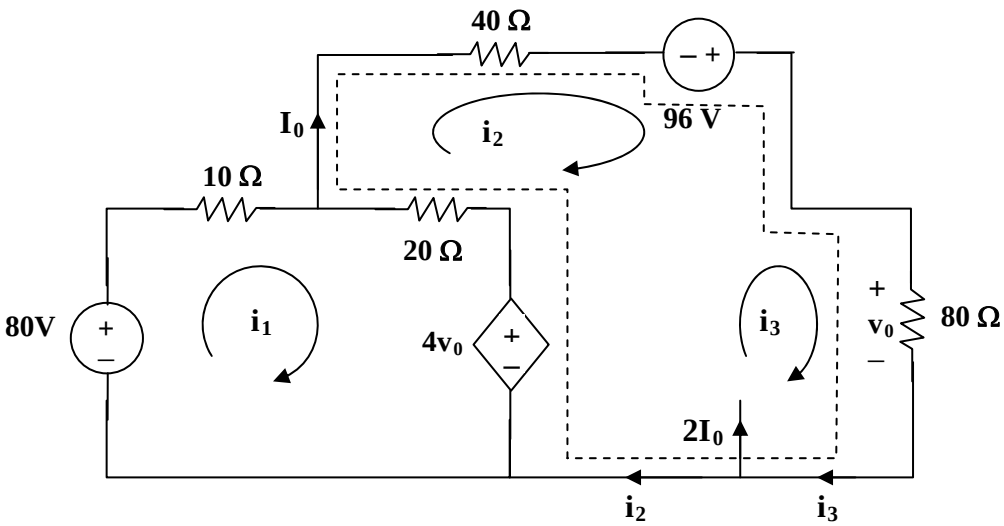

For loop 1, $-80 + 30i_1 - 20i_2 + 4v_0 = 0$, where $v_0 = 80i_3$

or $4 = 1.5i_1 - i_2 + 16i_3$ (1)

For the supermesh, $60i_2 - 20i_1 - 96 + 80i_3 - 4\,v_0 = 0$, where $v_0 = 80i_3$

or $4.8 = -i_1 + 3i_2 - 12i_3$ (2)

Also, $2I_0 = i_3 - i_2$ and $I_0 = i_2$, hence, $3i_2 = i_3$ (3)

From (1), (2), and (3),
$$\begin{bmatrix} 3 & -2 & 32 \\ -1 & 3 & -12 \\ 0 & 3 & -1 \end{bmatrix}\begin{bmatrix} i_1 \\ i_2 \\ i_3 \end{bmatrix} = \begin{bmatrix} 8 \\ 4.8 \\ 0 \end{bmatrix}$$

$$\Delta = \begin{vmatrix} 3 & -2 & 32 \\ -1 & 3 & -12 \\ 0 & 3 & -1 \end{vmatrix} = 5,\ \Delta_2 = \begin{vmatrix} 3 & 8 & 32 \\ -1 & 4.8 & -12 \\ 0 & 0 & -1 \end{vmatrix} = -22.4,\ \Delta_3 = \begin{vmatrix} 3 & -2 & 8 \\ -1 & 3 & 4.8 \\ 0 & 3 & 0 \end{vmatrix} = -67.2$$

$I_0 = i_2 = \Delta_2/\Delta = -28/5 =$ **–4.48 A**

$v_0 = 8i_3 = (-84/5)80 =$ **–1.0752 kvolts**

www.konkur.in

Chapter 3, Solution 60

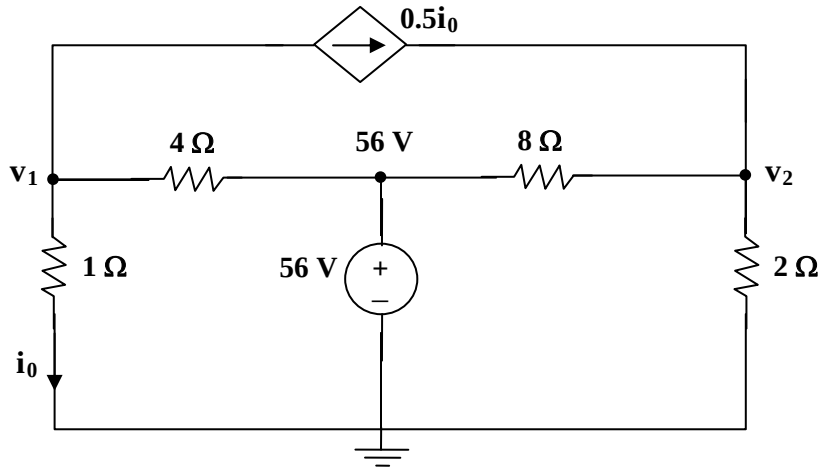

At node 1, $[(v_1–0)/1] + [(v_1–56)/4] + 0.5[(v_1–0)/1] = 0$ or $1.75v_1 = 14$ or $v_1 = 8$ V

At node 2, $[(v_2–56)/8] – 0.5[8/1] + [(v_2–0)/2] = 0$ or $0.625v_2 = 11$ or $v_2 = 17.6$ V

$P_{1\Omega} = (v_1)^2/1 =$ **64 watts**, $P_{2\Omega} = (v_2)^2/2 =$ **154.88 watts**,

$P_{4\Omega} = (56 – v_1)^2/4 =$ **576 watts**, $P_{8\Omega} = (56 – v_2)^2/8 =$ **1.84.32 watts**.

www.konkur.in

Chapter 3, Solution 61

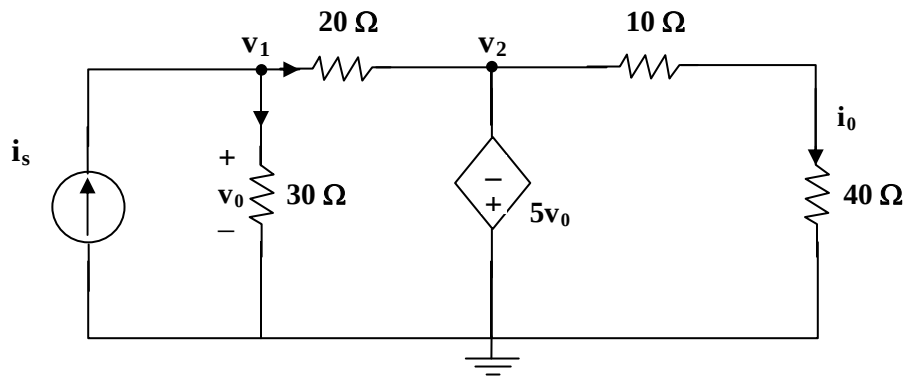

At node 1, $i_s = (v_1/30) + ((v_1 - v_2)/20)$ which leads to $60i_s = 5v_1 - 3v_2$ (1)

But $v_2 = -5v_0$ and $v_0 = v_1$ which leads to $v_2 = -5v_1$

Hence, $60i_s = 5v_1 + 15v_1 = 20v_1$ which leads to $v_1 = 3i_s$, $v_2 = -15i_s$

$i_0 = v_2/50 = -15i_s/50$ which leads to $i_0/i_s = -15/50 =$ **–0.3**

www.konkur.in

Chapter 3, Solution 62

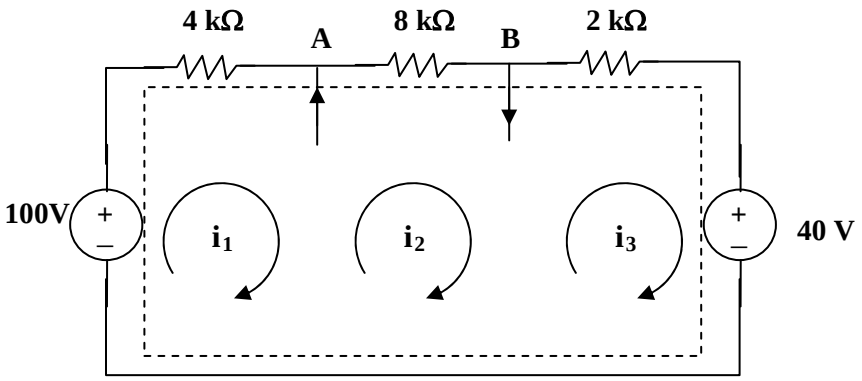

We have a supermesh. Let all R be in kΩ, i in mA, and v in volts.

For the supermesh, $-100 + 4i_1 + 8i_2 + 2i_3 + 40 = 0$ or $30 = 2i_1 + 4i_2 + i_3$ (1)

At node A, $i_1 + 4 = i_2$ (2)

At node B, $i_2 = 2i_1 + i_3$ (3)

Solving (1), (2), and (3), we get i_1 = **2 mA**, i_2 = **6 mA**, and i_3 = **2 mA**.

www.konkur.in

Chapter 3, Solution 63

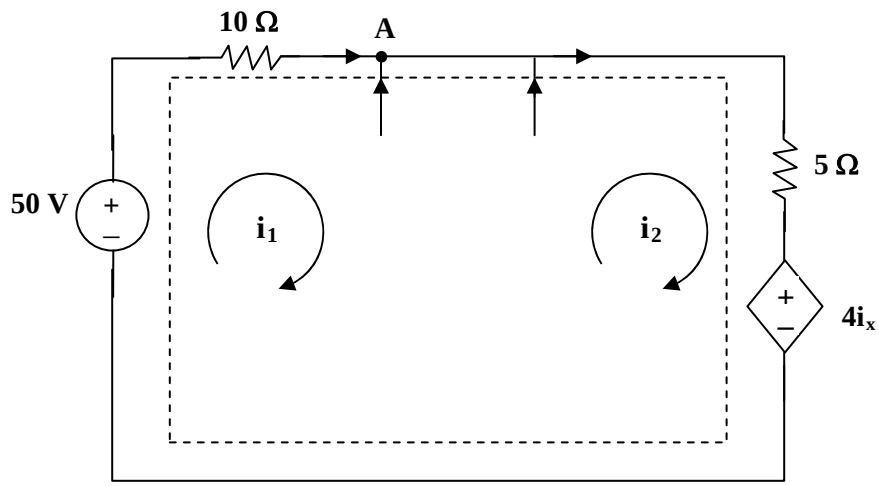

For the supermesh, $-50 + 10i_1 + 5i_2 + 4i_x = 0$, but $i_x = i_1$. Hence,

$$50 = 14i_1 + 5i_2 \qquad (1)$$

At node A, $i_1 + 3 + (v_x/4) = i_2$, but $v_x = 2(i_1 - i_2)$, hence, $i_1 + 2 = i_2$ (2)

Solving (1) and (2) gives $i_1 = 2.105$ A and $i_2 = 4.105$ A

$v_x = 2(i_1 - i_2) =$ **–4 volts** and $i_x = i_2 - 2 =$ **2.105 amp**

www.konkur.in

Chapter 3, Solution 64

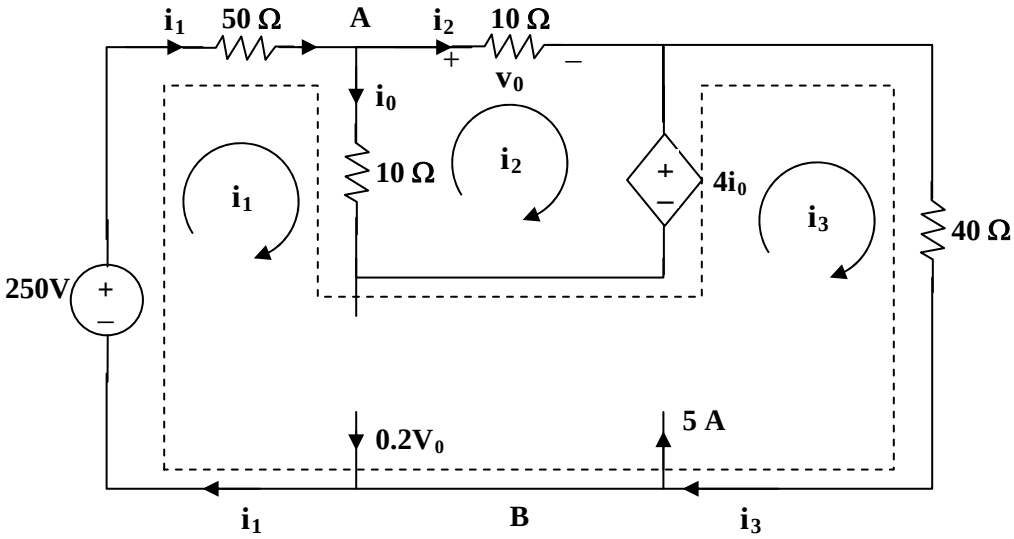

For mesh 2, $20i_2 - 10i_1 + 4i_0 = 0$ (1)

But at node A, $i_o = i_1 - i_2$ so that (1) becomes $i_1 = (16/6)i_2$ (2)

For the supermesh, $-250 + 50i_1 + 10(i_1 - i_2) - 4i_0 + 40i_3 = 0$

or $28i_1 - 3i_2 + 20i_3 = 125$ (3)

At node B, $i_3 + 0.2v_0 = 2 + i_1$ (4)

But, $v_0 = 10i_2$ so that (4) becomes $i_3 = 5 + (2/3)i_2$ (5)

Solving (1) to (5), $i_2 = 0.2941$ A,

$v_0 = 10i_2 =$ **2.941 volts**, $i_0 = i_1 - i_2 = (5/3)i_2 =$ **490.2mA**.

www.konkur.in

Chapter 3, Solution 65

For mesh 1,

$$-12 + 12I_1 - 6I_2 - I_4 = 0 \text{ or}$$
$$12 = 12I_1 - 6I_2 - I_4 \qquad (1)$$

For mesh 2,

$$-6I_1 + 16I_2 - 8I_3 - I_4 - I_5 = 0 \qquad (2)$$

For mesh 3,

$$-8I_2 + 15I_3 - I_5 - 9 = 0 \text{ or}$$
$$9 = -8I_2 + 15I_3 - I_5 \qquad (3)$$

For mesh 4,

$$-I_1 - I_2 + 7I_4 - 2I_5 - 6 = 0 \text{ or}$$
$$6 = -I_1 - I_2 + 7I_4 - 2I_5 \qquad (4)$$

For mesh 5,

$$-I_2 - I_3 - 2I_4 + 8I_5 - 10 = 0 \text{ or}$$
$$10 = -I_2 - I_3 - 2I_4 + 8I_5 \qquad (5)$$

Casting (1) to (5) in matrix form gives

$$\begin{pmatrix} 12 & -6 & 0 & 1 & 0 \\ -6 & 16 & -8 & -1 & -1 \\ 0 & -8 & 15 & 0 & -1 \\ -1 & -1 & 0 & 7 & -2 \\ 0 & -1 & -1 & -2 & 8 \end{pmatrix} \begin{pmatrix} I_1 \\ I_2 \\ I_3 \\ I_4 \\ I_5 \end{pmatrix} = \begin{pmatrix} 12 \\ 0 \\ 9 \\ 6 \\ 10 \end{pmatrix} \longrightarrow \quad AI = B$$

Using MATLAB we input:
Z=[12,-6,0,-1,0;-6,16,-8,-1,-1;0,-8,15,0,-1;-1,-1,0,7,-2;0,-1,-1,-2,8]
and V=[12;0;9;6;10]

This leads to

```
>> Z=[12,-6,0,-1,0;-6,16,-8,-1,-1;0,-8,15,0,-1;-1,-1,0,7,-2;0,-1,-1,-2,8]

Z =

    12    -6     0    -1     0
    -6    16    -8    -1    -1
     0    -8    15     0    -1
    -1    -1     0     7    -2
     0    -1    -1    -2     8

>> V=[12;0;9;6;10]

V =

    12
```

www.konkur.in

```
     0
     9
     6
    10

>> I=inv(Z)*V

I =

    2.1701
    1.9912
    1.8119
    2.0942
    2.2489
```

Thus,

I = [2.17, 1.9912, 1.8119, 2.094, 2.249] A.

www.konkur.in

Chapter 3, Solution 66

The mesh equations are obtained as follows.

$$-12 + 24 + 30I_1 - 4I_2 - 6I_3 - 2I_4 = 0$$

or

$$30I_1 - 4I_2 - 6I_3 - 2I_4 = -12 \qquad (1)$$

$$-24 + 40 - 4I_1 + 30I_2 - 2I_4 - 6I_5 = 0$$

or

$$-4I_1 + 30I_2 - 2I_4 - 6I_5 = -16 \qquad (2)$$

$$-6I_1 + 18I_3 - 4I_4 = 30 \qquad (3)$$

$$-2I_1 - 2I_2 - 4I_3 + 12I_4 - 4I_5 = 0 \qquad (4)$$

$$-6I_2 - 4I_4 + 18I_5 = -32 \qquad (5)$$

Putting (1) to (5) in matrix form

$$\begin{bmatrix} 30 & -4 & -6 & -2 & 0 \\ -4 & 30 & 0 & -2 & -6 \\ -6 & 0 & 18 & -4 & 0 \\ -2 & -2 & -4 & 12 & -4 \\ 0 & -6 & 0 & -4 & 18 \end{bmatrix} I = \begin{bmatrix} -12 \\ -16 \\ 30 \\ 0 \\ -32 \end{bmatrix}$$

$$ZI = V$$

Using MATLAB,

```
>> Z = [30,-4,-6,-2,0;
-4,30,0,-2,-6;
-6,0,18,-4,0;
-2,-2,-4,12,-4;
0,-6,0,-4,18]

Z =

    30    -4    -6    -2     0
    -4    30     0    -2    -6
    -6     0    18    -4     0
    -2    -2    -4    12    -4
```

www.konkur.in

```
     0    -6     0    -4    18

>> V = [-12,-16,30,0,-32]'

V =

   -12
   -16
    30
     0
   -32

>> I = inv(Z)*V

I =
```

-0.2779 A
-1.0488 A
1.4682 A
-0.4761 A
-2.2332 A

www.konkur.in

Chapter 3, Solution 67

Consider the circuit below.

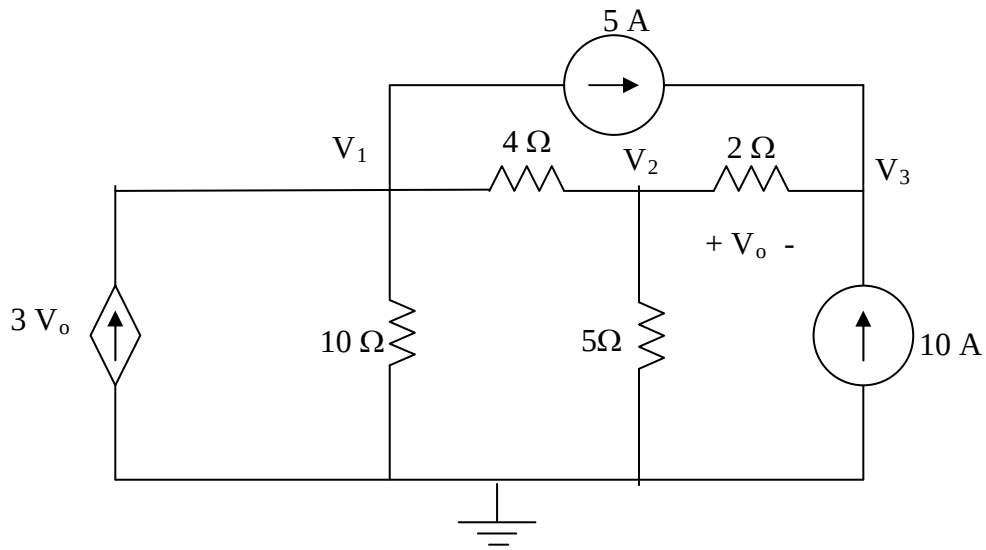

$$\begin{bmatrix} 0.35 & -0.25 & 0 \\ -0.25 & 0.95 & -0.5 \\ 0 & -0.5 & 0.5 \end{bmatrix} V = \begin{bmatrix} -5+3V_o \\ 0 \\ 15 \end{bmatrix}$$

Since we actually have four unknowns and only three equations, we need a constraint equation.

$$V_o = V_2 - V_3$$

Substituting this back into the matrix equation, the first equation becomes,

$$0.35V_1 - 3.25V_2 + 3V_3 = -5$$

This now results in the following matrix equation,

www.konkur.in

$$\begin{bmatrix} 0.35 & -3.25 & 3 \\ -0.25 & 0.95 & -0.5 \\ 0 & -0.5 & 0.5 \end{bmatrix} V = \begin{bmatrix} -5 \\ 0 \\ 15 \end{bmatrix}$$

Now we can use MATLAB to solve for V.

```
>> Y=[0.35,-3.25,3;-0.25,0.95,-0.5;0,-0.5,0.5]

Y =

    0.3500   -3.2500    3.0000
   -0.2500    0.9500   -0.5000
         0   -0.5000    0.5000

>> I=[–5,0,15]'

I =

   –5
    0
   15

>> V=inv(Y)*I

V =

–410.5262
–194.7368
–164.7368
```

$V_o = V_2 - V_3 = -77.89 + 65.89 =$ **–30 V**.

Let us now do a quick check at node 1.

–3(–30) + 0.1(–410.5) + 0.25(–410.5+194.74) + 5 =
90–41.05–102.62+48.68+5 = 0.01; essentially zero considering the accuracy we are using. The answer checks.

www.konkur.in

Chapter 3, Solution 68

Although there are many ways to work this problem, this is an example based on the same kind of problem asked in the third edition.

Problem

Find the voltage V_o in the circuit of Fig. 3.112.

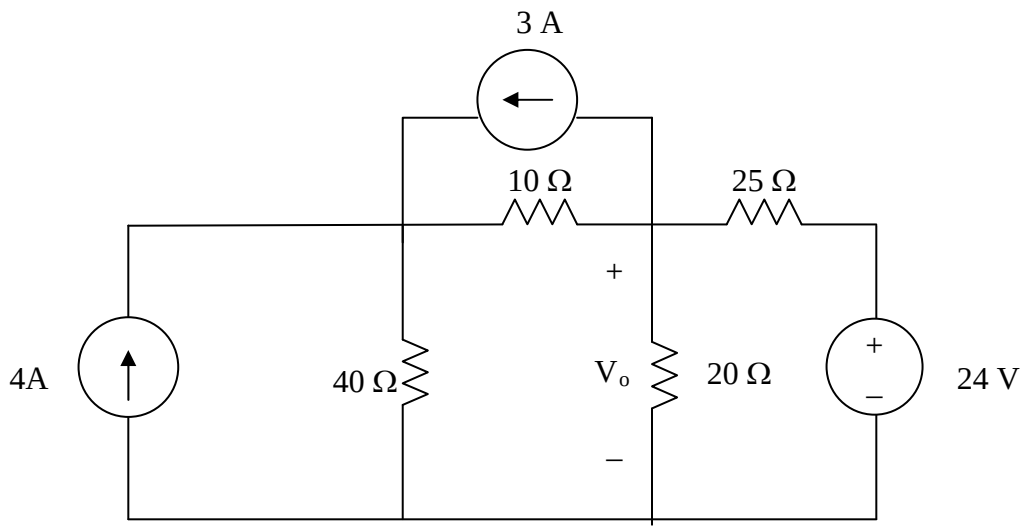

Figure 3.112
For Prob. 3.68.

Solution

Consider the circuit below. There are two non-reference nodes.

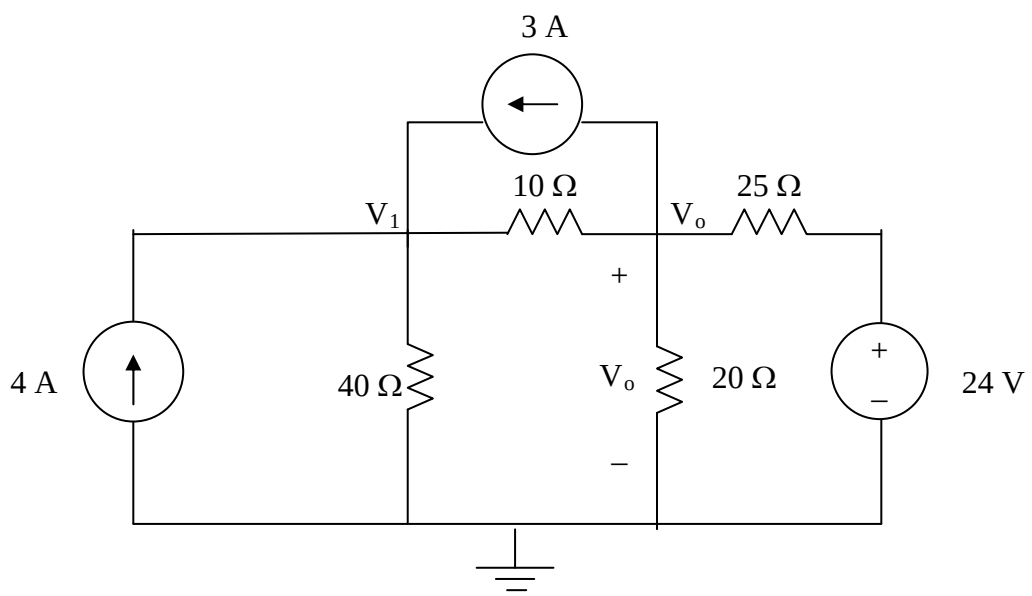

www.konkur.in

$$\begin{bmatrix} 0.125 & -0.1 \\ -0.1 & 0.19 \end{bmatrix} V = \begin{bmatrix} +4+3 \\ -3+24/25 \end{bmatrix} = \begin{bmatrix} 7 \\ -2.04 \end{bmatrix}$$

Using MATLAB, we get,

```
>> Y=[0.125,-0.1;-0.1,0.19]

Y =

    0.1250   -0.1000
   -0.1000    0.1900

>> I=[7,-2.04]'

I =

    7.0000
   -2.0400

>> V=inv(Y)*I

V =

   81.8909
   32.3636
```

Thus, V_o = **32.36 V**.

We can perform a simple check at node V_o,

3 + 0.1(32.36–81.89) + 0.05(32.36) + 0.04(32.36–24) =
3 – 4.953 + 1.618 + 0.3344 = – 0.0004; answer checks!

www.konkur.in

Chapter 3, Solution 69

Assume that all conductances are in mS, all currents are in mA, and all voltages are in volts.

$G_{11} = (1/2) + (1/4) + (1/1) = 1.75$, $G_{22} = (1/4) + (1/4) + (1/2) = 1$,
$G_{33} = (1/1) + (1/4) = 1.25$, $G_{12} = -1/4 = -0.25$, $G_{13} = -1/1 = -1$,
$G_{21} = -0.25$, $G_{23} = -1/4 = -0.25$, $G_{31} = -1$, $G_{32} = -0.25$

$i_1 = 20$, $i_2 = 5$, and $i_3 = 10 - 5 = 5$

The node-voltage equations are:

$$\begin{bmatrix} \mathbf{1.75} & \mathbf{-0.25} & \mathbf{-1} \\ \mathbf{-0.25} & \mathbf{1} & \mathbf{-0.25} \\ \mathbf{-1} & \mathbf{-0.25} & \mathbf{1.25} \end{bmatrix} \begin{bmatrix} \boldsymbol{v}_1 \\ \boldsymbol{v}_2 \\ \boldsymbol{v}_3 \end{bmatrix} = \begin{bmatrix} \mathbf{20} \\ \mathbf{5} \\ \mathbf{5} \end{bmatrix}$$

www.konkur.in

Chapter 3, Solution 70

$$\begin{bmatrix} 3 & 0 \\ 0 & 5 \end{bmatrix} V = \begin{bmatrix} 4I_x + 20 \\ -4I_x - 7 \end{bmatrix}$$

With two equations and three unknowns, we need a constraint equation,

$I_x = 2V_1$, thus the matrix equation becomes,

$$\begin{bmatrix} -5 & 0 \\ 8 & 5 \end{bmatrix} V = \begin{bmatrix} 20 \\ -7 \end{bmatrix}$$

This results in $V_1 = 20/(-5) =$ **–4 V** and
$V_2 = [-8(-4) - 7]/5 = [32 - 7]/5 =$ **5 V**.

www.konkur.in

Chapter 3, Solution 71

$$\begin{bmatrix} 9 & -4 & -5 \\ -4 & 7 & -1 \\ -5 & -1 & 9 \end{bmatrix} I = \begin{bmatrix} 30 \\ -15 \\ 0 \end{bmatrix}$$

We can now use MATLAB solve for our currents.

```
>> R=[9,–4,–5;–4,7,–1;–5,–1,9]

R =

    9   –4   –5
   –4    7   –1
   –5   –1    9

>> V=[30,–15,0]'

V =

   30
  –15
    0

>> I=inv(R)*V

I =
```

6.255 A
1.9599 A
3.694 A

www.konkur.in

Chapter 3, Solution 72

$R_{11} = 5 + 2 = 7$, $R_{22} = 2 + 4 = 6$, $R_{33} = 1 + 4 = 5$, $R_{44} = 1 + 4 = 5$, $R_{12} = -2$, $R_{13} = 0 = R_{14}$, $R_{21} = -2$, $R_{23} = -4$, $R_{24} = 0$, $R_{31} = 0$, $R_{32} = -4$, $R_{34} = -1$, $R_{41} = 0 = R_{42}$, $R_{43} = -1$, we note that $R_{ij} = R_{ji}$ for all i not equal to j.

$v_1 = 8$, $v_2 = 4$, $v_3 = -10$, and $v_4 = -4$

Hence the mesh-current equations are:

$$\begin{bmatrix} 7 & -2 & 0 & 0 \\ -2 & 6 & -4 & 0 \\ 0 & -4 & 5 & -1 \\ 0 & 0 & -1 & 5 \end{bmatrix} \begin{bmatrix} i_1 \\ i_2 \\ i_3 \\ i_4 \end{bmatrix} = \begin{bmatrix} 8 \\ 4 \\ -10 \\ -4 \end{bmatrix}$$

www.konkur.in

Chapter 3, Solution 73

$R_{11} = 2 + 3 + 4 = 9$, $R_{22} = 3 + 5 = 8$, $R_{33} = 1 + 1 + 4 = 6$, $R_{44} = 1 + 1 = 2$,
$R_{12} = -3$, $R_{13} = -4$, $R_{14} = 0$, $R_{23} = 0$, $R_{24} = 0$, $R_{34} = -1$

$v_1 = 6$, $v_2 = 4$, $v_3 = 2$, and $v_4 = -3$

Hence,

$$\begin{bmatrix} 9 & -3 & -4 & 0 \\ -3 & 8 & 0 & 0 \\ -4 & 0 & 6 & -1 \\ 0 & 0 & -1 & 2 \end{bmatrix} \begin{bmatrix} i_1 \\ i_2 \\ i_3 \\ i_4 \end{bmatrix} = \begin{bmatrix} 6 \\ 4 \\ 2 \\ -3 \end{bmatrix}$$

www.konkur.in

Chapter 3, Solution 74

$R_{11} = R_1 + R_4 + R_6$, $R_{22} = R_2 + R_4 + R_5$, $R_{33} = R_6 + R_7 + R_8$,
$R_{44} = R_3 + R_5 + R_8$, $R_{12} = -R_4$, $R_{13} = -R_6$, $R_{14} = 0$, $R_{23} = 0$,
$R_{24} = -R_5$, $R_{34} = -R_8$, again, we note that $R_{ij} = R_{ji}$ for all i not equal to j.

The input voltage vector is = $\begin{bmatrix} V_1 \\ -V_2 \\ V_3 \\ -V_4 \end{bmatrix}$

$$\begin{bmatrix} \mathbf{R_1 + R_4 + R_6} & \mathbf{-R_4} & \mathbf{-R_6} & \mathbf{0} \\ \mathbf{-R_4} & \mathbf{R_2 + R_4 + R_5} & \mathbf{0} & \mathbf{-R_5} \\ \mathbf{-R_6} & \mathbf{0} & \mathbf{R_6 + R_7 + R_8} & \mathbf{-R_8} \\ \mathbf{0} & \mathbf{-R_5} & \mathbf{-R_8} & \mathbf{R_3 + R_5 + R_8} \end{bmatrix} \begin{bmatrix} \boldsymbol{i_1} \\ \boldsymbol{i_2} \\ \boldsymbol{i_3} \\ \boldsymbol{i_4} \end{bmatrix} = \begin{bmatrix} \boldsymbol{V_1} \\ \boldsymbol{-V_2} \\ \boldsymbol{V_3} \\ \boldsymbol{-V_4} \end{bmatrix}$$

www.konkur.in

Chapter 3, Solution 75

```
* Schematics Netlist *

R_R4          $N_0002 $N_0001  30
R_R2          $N_0001 $N_0003  10
R_R1          $N_0005 $N_0004  30
R_R3          $N_0003 $N_0004  10
R_R5          $N_0006 $N_0004  30
V_V4          $N_0003 0 120V
v_V3          $N_0005 $N_0001 0
v_V2          0 $N_0006 0
v_V1          0 $N_0002 0
```

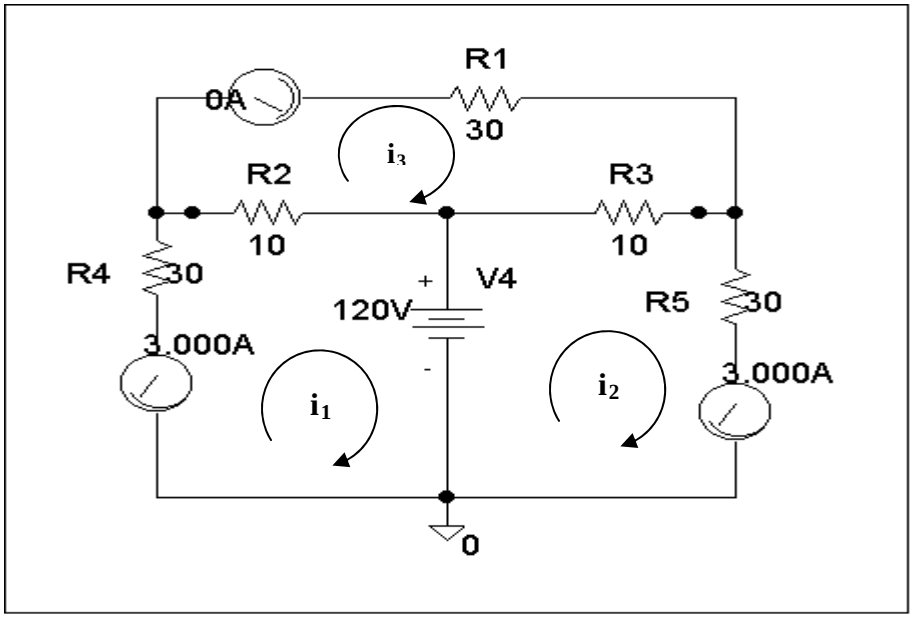

Clearly, i_1 = **–3 amps**, i_2 = **0 amps**, and i_3 = **3 amps**, which agrees with the answers in Problem 3.44.

www.konkur.in

Chapter 3, Solution 76

```
* Schematics Netlist *

I_I2          0 $N_0001 DC 4A
R_R1          $N_0002 $N_0001  0.25
R_R3          $N_0003 $N_0001  1
R_R2          $N_0002 $N_0003  1
F_F1          $N_0002 $N_0001 VF_F1 3
VF_F1         $N_0003 $N_0004 0V
R_R4          0 $N_0002  0.5
R_R6          0 $N_0001  0.5
I_I1          0 $N_0002 DC 2A
R_R5          0 $N_0004  0.25
```

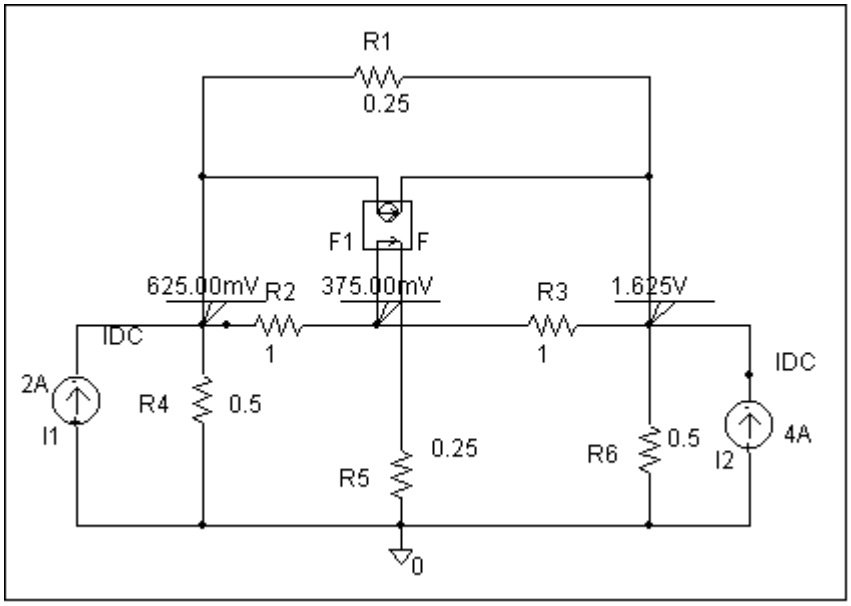

Clearly, v_1 = **625 mVolts**, v_2 = **375 mVolts**, and v_3 = **1.625 volts**, which agrees with the solution obtained in Problem 3.27.

www.konkur.in

Chapter 3, Solution 77

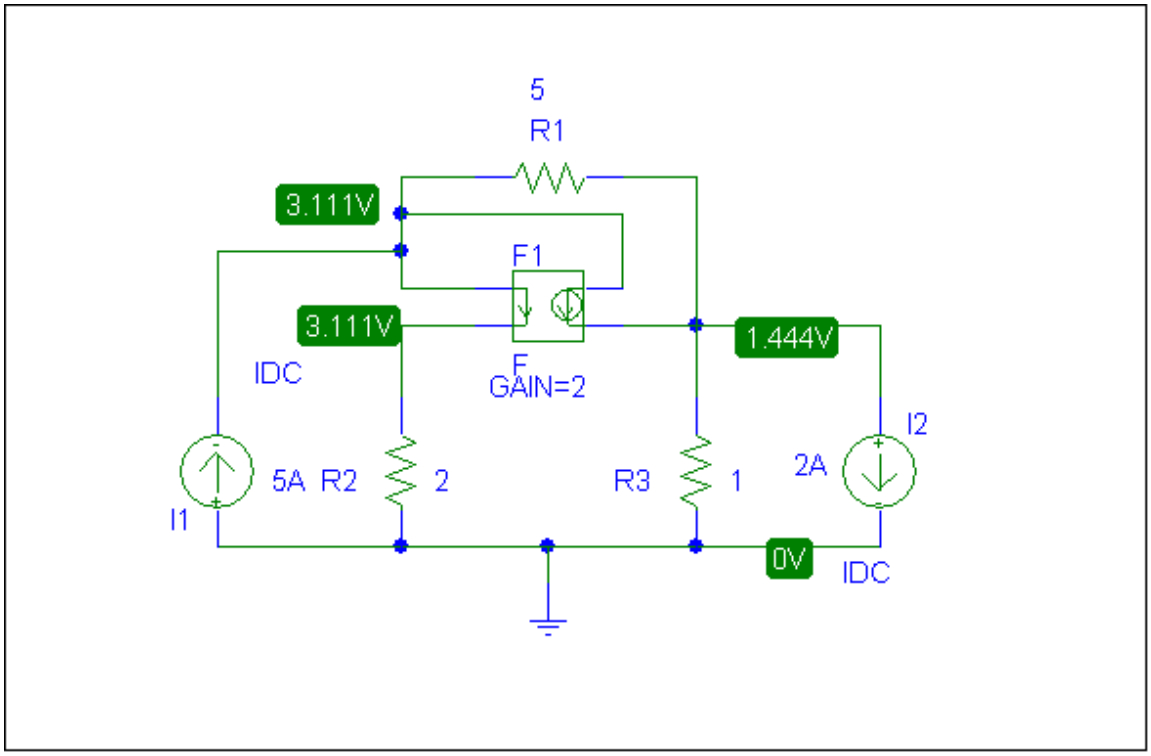

As a check we can write the nodal equations,

$$\begin{bmatrix} 1.7 & -0.2 \\ -1.2 & 1.2 \end{bmatrix} V = \begin{bmatrix} 5 \\ -2 \end{bmatrix}$$

Solving this leads to V_1 = **3.111 V** and V_2 = **1.4444 V**. The answer checks!

www.konkur.in

Chapter 3, Solution 78

The schematic is shown below. When the circuit is saved and simulated the node voltages are displayed on the pseudocomponents as shown. Thus,

$\underline{V_1 = -3\text{V}, \quad V_2 = 4.5\text{V}, V_3 = -15\text{V},}$

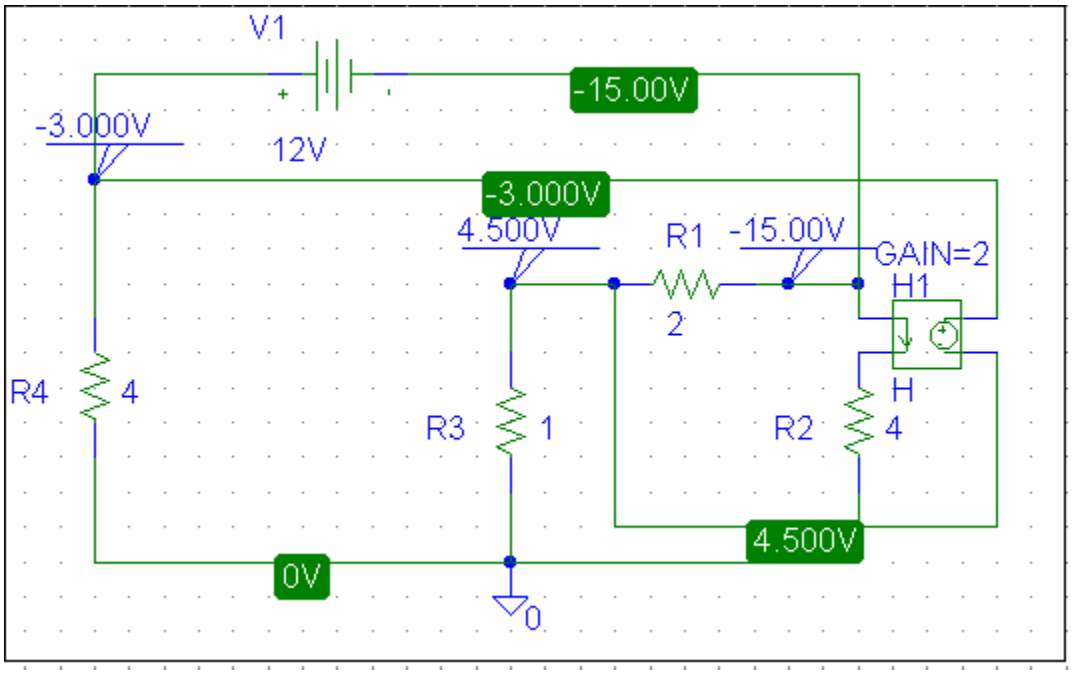

www.konkur.in

Chapter 3, Solution 79

The schematic is shown below. When the circuit is saved and simulated, we obtain the node voltages as displayed. Thus,

V_a = **–10.556 volts**; V_b = **20.56 volts**; V_c = **1.3889 volts**; and V_d = **–43.75 volts**.

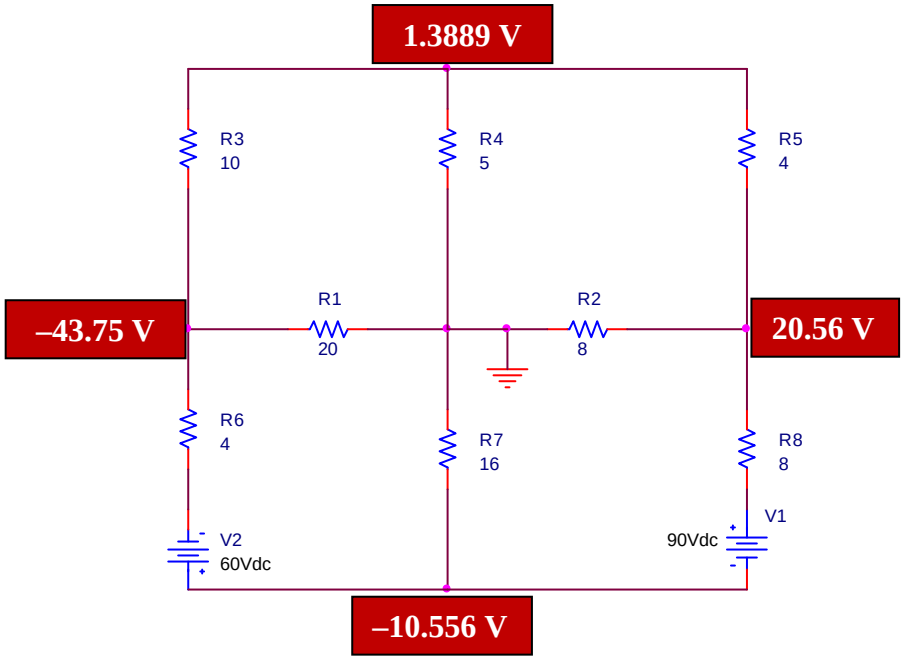

www.konkur.in

Chapter 3, Solution 80

```
* Schematics Netlist *

H_H1          $N_0002 $N_0003 VH_H1 6
VH_H1         0 $N_0001 0V
I_I1          $N_0004 $N_0005 DC 8A
V_V1          $N_0002 0 20V
R_R4          0 $N_0003  4
R_R1          $N_0005 $N_0003  10
R_R2          $N_0003 $N_0002  12
R_R5          0 $N_0004  1
R_R3          $N_0004 $N_0001  2
```

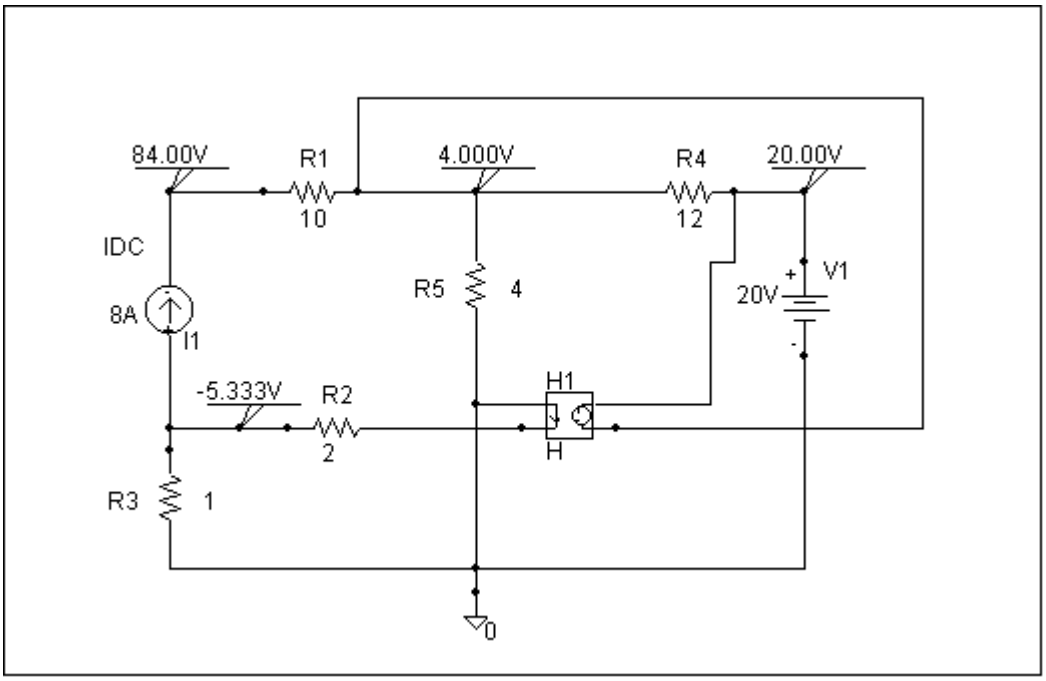

Clearly, v_1 = **84 volts**, v_2 = **4 volts**, v_3 = **20 volts**, and v_4 = **-5.333 volts**

www.konkur.in

Chapter 3, Solution 81

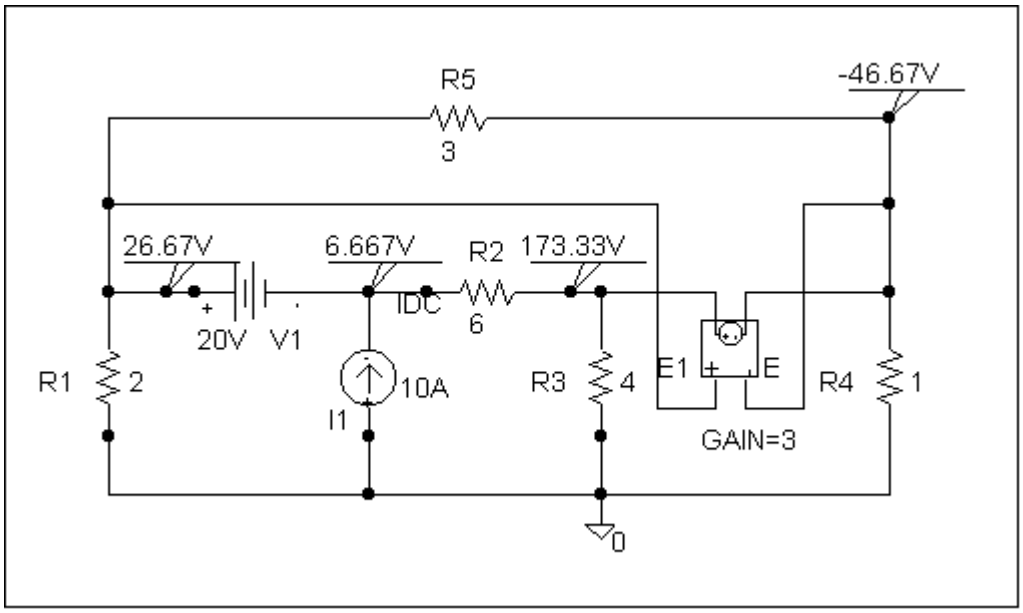

Clearly, v_1 = **26.67 volts**, v_2 = **6.667 volts**, v_3 = **173.33 volts**, and v_4 = **–46.67 volts** which agrees with the results of Example 3.4.

This is the netlist for this circuit.

```
* Schematics Netlist *

R_R1          0 $N_0001  2
R_R2          $N_0003 $N_0002  6
R_R3          0 $N_0002  4
R_R4          0 $N_0004  1
R_R5          $N_0001 $N_0004  3
I_I1          0 $N_0003 DC 10A
V_V1          $N_0001 $N_0003 20V
E_E1          $N_0002 $N_0004 $N_0001 $N_0004 3
```

www.konkur.in

Chapter 3, Solution 82

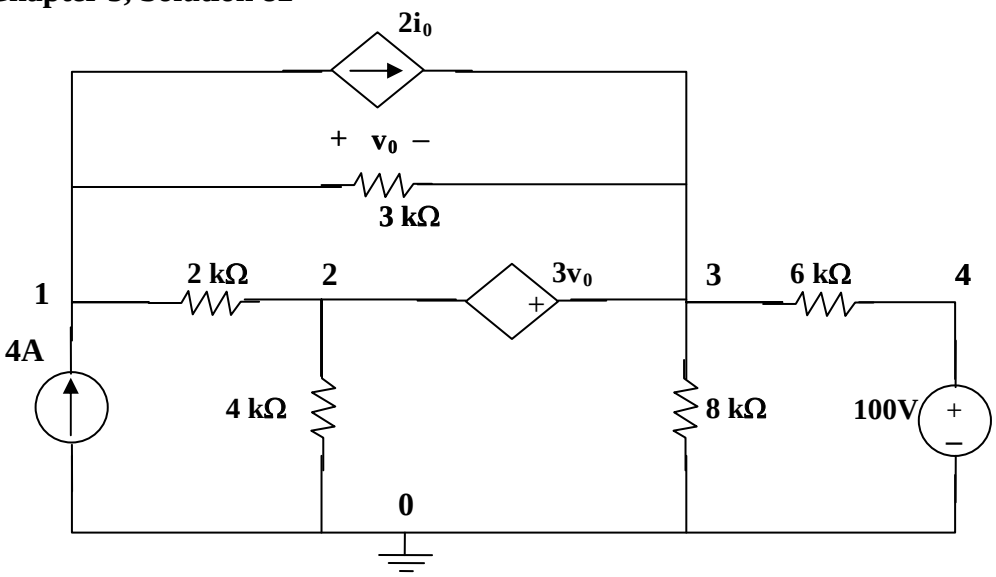

This network corresponds to the Netlist.

www.konkur.in

Chapter 3, Solution 83

The circuit is shown below.

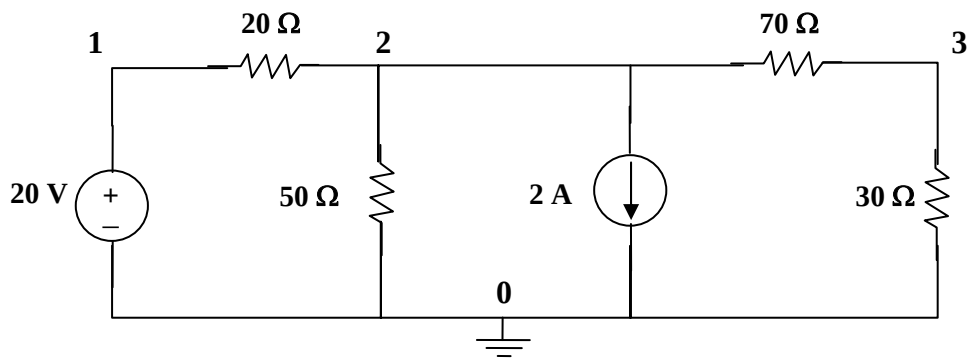

When the circuit is saved and simulated, we obtain v_2 = **–12.5 volts**

www.konkur.in

Chapter 3, Solution 84

From the output loop, $v_0 = 50i_0 x 20x10^3 = 10^6 i_0$ (1)

From the input loop, $15x10^{-3} + 4000i_0 - v_0/100 = 0$ (2)

From (1) and (2) we get, i_0 = **2.5 μA** and v_0 = **2.5 volt**.

www.konkur.in

Chapter 3, Solution 85

The amplifier acts as a source.

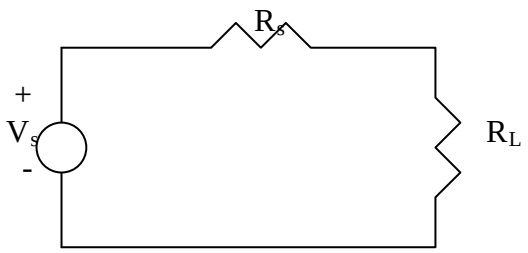

For maximum power transfer,

$$R_L = R_s = \underline{9\Omega}$$

www.konkur.in

Chapter 3, Solution 86

Let v_1 be the potential across the 2 k-ohm resistor with plus being on top. Then,

Since $i = [(0.047–v_1)/1k]$
$[(v_1–0.047)/1k] – 400[(0.047–v_1)/1k] + [(v_1–0)/2k] = 0$ or

$401[(v_1–0.047)] + 0.5v_1 = 0$ or $401.5v_1 = 401x0.047$ or
$v_1 = 0.04694$ volts and $i = (0.047–0.04694)/1k = 60$ nA

Thus,

$$v_0 = –5000x400x60x10^{-9} = \mathbf{–120\ mV}.$$

www.konkur.in

Chapter 3, Solution 87

$v_1 = 500(v_s)/(500 + 2000) = v_s/5$

$v_0 = -400(60v_1)/(400 + 2000) = -40v_1 = -40(v_s/5) = -8v_s$,

Therefore, $v_0/v_s =$ **–8**

www.konkur.in

Chapter 3, Solution 88

Let v_1 be the potential at the top end of the 100-ohm resistor.

$$(v_s - v_1)/200 = v_1/100 + (v_1 - 10^{-3}v_0)/2000 \qquad (1)$$

For the right loop, $v_0 = -40i_0(10{,}000) = -40(v_1 - 10^{-3})10{,}000/2000$,

$$\text{or, } v_0 = -200v_1 + 0.2v_0 = -4\text{x}10^{-3}v_0 \qquad (2)$$

Substituting (2) into (1) gives, $(v_s + 0.004v_1)/2 = -0.004v_0 + (-0.004v_1 - 0.001v_0)/20$

This leads to $0.125v_0 = 10v_s$ or $(v_0/v_s) = 10/0.125 =$ **–80**

www.konkur.in

Chapter 3, Solution 89

Consider the circuit below.

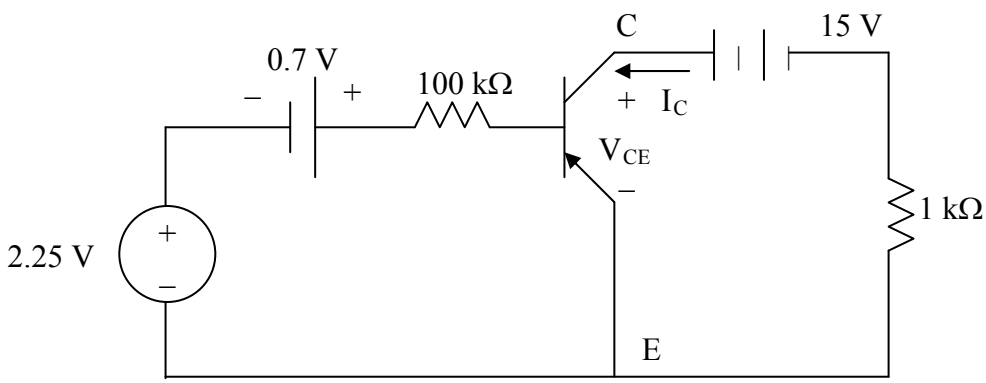

For the left loop, applying KVL gives

$$-2.25 - 0.7 + 10^5 I_B + V_{BE} = 0 \text{ but } V_{BE} = 0.7 \text{ V means } 10^5 I_B = 2.25 \text{ or}$$

$$I_B = \mathbf{22.5\ \mu A}.$$

For the right loop, $-V_{CE} + 15 - I_C x10^3 = 0$. Addition ally, $I_C = \beta I_B = 100x22.5x10^{-6} =$ 2.25 mA. Therefore,

$$V_{CE} = 15 - 2.25x10^{-3}x10^3 = \mathbf{12.75\ V}.$$

www.konkur.in

Chapter 3, Solution 90

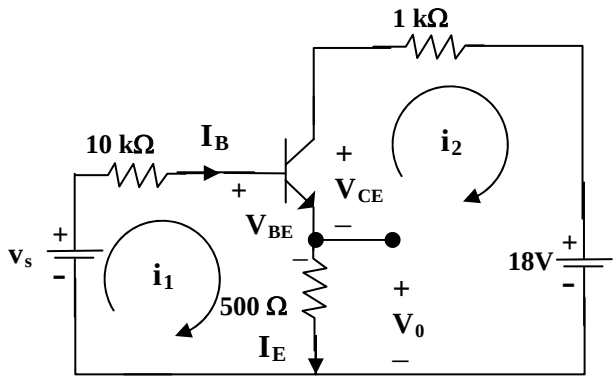

For loop 1, $-v_s + 10k(I_B) + V_{BE} + I_E\,(500) = 0 = -v_s + 0.7 + 10{,}000I_B + 500(1 + \beta)I_B$

which leads to $v_s + 0.7 = 10{,}000I_B + 500(151)I_B = 85{,}500I_B$

But, $v_0 = 500I_E = 500x151I_B = 4$ which leads to $I_B = 5.298x10^{-5}$

Therefore, $v_s = 0.7 + 85{,}500I_B =$ **5.23 volts**

www.konkur.in

Chapter 3, Solution 91

We first determine the Thevenin equivalent for the input circuit.

$R_{Th} = 6||2 = 6x2/8 = 1.5\ k\Omega$ and $V_{Th} = 2(3)/(2+6) = 0.75$ volts

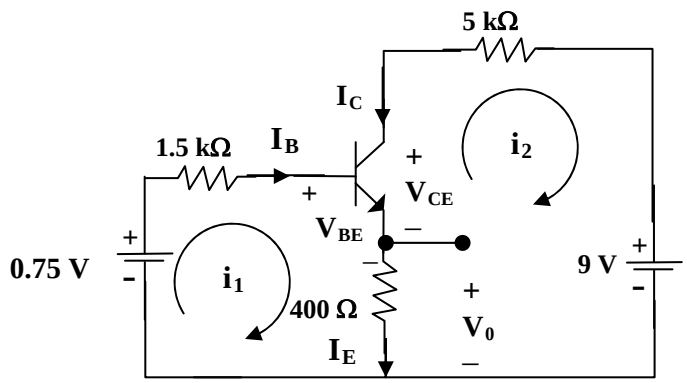

For loop 1, $-0.75 + 1.5kI_B + V_{BE} + 400I_E = 0 = -0.75 + 0.7 + 1500I_B + 400(1 + \beta)I_B$

$I_B = 0.05/81{,}900 =$ **0.61 μA**

$v_0 = 400I_E = 400(1 + \beta)I_B =$ **49 mV**

For loop 2, $-400I_E - V_{CE} - 5kI_C + 9 = 0$, but, $I_C = \beta I_B$ and $I_E = (1 + \beta)I_B$

$V_{CE} = 9 - 5k\beta I_B - 400(1 + \beta)I_B = 9 - 0.659 =$ **8.641 volts**

www.konkur.in

Chapter 3, Solution 92

Although there are many ways to work this problem, this is an example based on the same kind of problem asked in the third edition.

Problem

Find $\boldsymbol{I_B}$ and $\mathbf{V}_C$ for the circuit in Fig. 3.128. Let $\beta = 100$, $V_{BE} = 0.7V$.

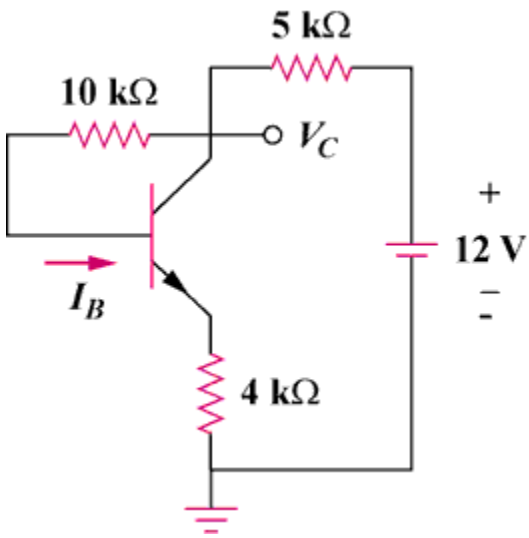

Figure 3.128

Solution

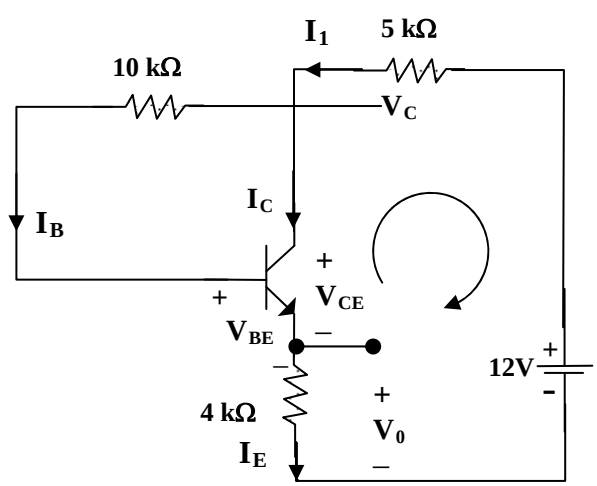

$I_1 = I_B + I_C = (1 + \beta)I_B$ and $I_E = I_B + I_C = I_1$

www.konkur.in

Applying KVL around the outer loop,

$$4kI_E + V_{BE} + 10kI_B + 5kI_1 = 12$$

$$12 - 0.7 = 5k(1 + \beta)I_B + 10kI_B + 4k(1 + \beta)I_B = 919kI_B$$

$$I_B = 11.3/919k = 12.296\ \mu A$$

Also, $12 = 5kI_1 + V_C$ which leads to $V_C = 12 - 5k(101)I_B =$ **5.791 volts**

www.konkur.in

Chapter 3, Solution 93

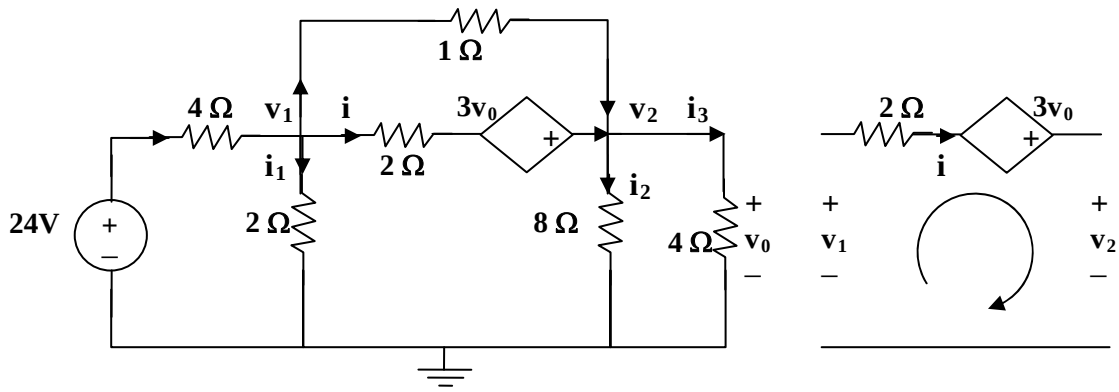

(a) **(b)**

From (b), $-v_1 + 2i - 3v_0 + v_2 = 0$ which leads to $i = (v_1 + 3v_0 - v_2)/2$

At node 1 in (a), $((24 - v_1)/4) = (v_1/2) + ((v_1 + 3v_0 - v_2)/2) + ((v_1 - v_2)/1)$, where $v_0 = v_2$

or $24 = 9v_1$ which leads to $v_1 =$ **2.667 volts**

At node 2, $((v_1 - v_2)/1) + ((v_1 + 3v_0 - v_2)/2) = (v_2/8) + v_2/4$, $v_0 = v_2$

$v_2 = 4v_1 =$ **10.66 volts**

Now we can solve for the currents, $i_1 = v_1/2 =$ **1.333 A**, $i_2 =$ **1.333 A**, and

$i_3 =$ **2.6667** A.

www.konkur.in

Chapter 4, Solution 1.

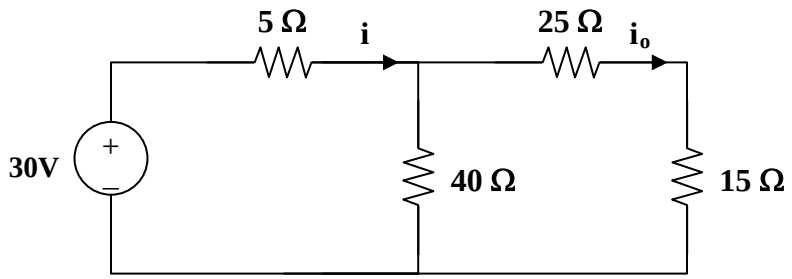

$40\|(25+15) = 20\Omega$, i = [30/(5+20)] = 1.2 and i_o = i20/40 = **600 mA**.

Since the resistance remains the same we get can use linearity to find the new value of the voltage source = (30/0.6)5 = **250 V**.

www.konkur.in

4.2 Using Fig. 4.70, design a problem to help other students better understand linearity.

Although there are many ways to work this problem, this is an example based on the same kind of problem asked in the third edition.

Problem

Find $\boldsymbol{v_o}$ in the circuit of Fig. 4.70. If the source current is reduced to 1 μA, what is $\boldsymbol{v_o}$?

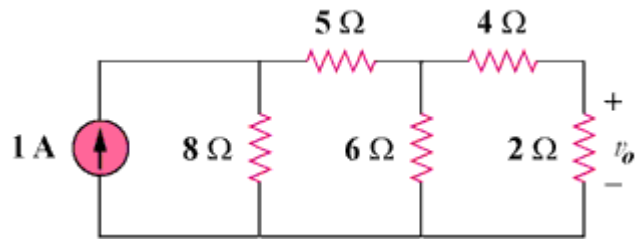

Figure 4.70

Solution

$$6\|(4+2) = 3\Omega, \quad i_1 = i_2 = \frac{1}{2}\text{A}$$

$$i_o = \frac{1}{2}i_1 = \frac{1}{4}, \quad v_o = 2i_o = \underline{\mathbf{0.5V}}$$

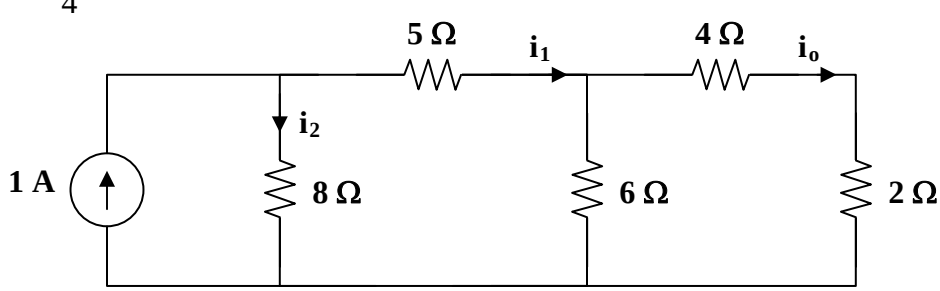

If i_s = 1μA, then v_o = **0.5μV**

www.konkur.in

Chapter 4, Solution 3.

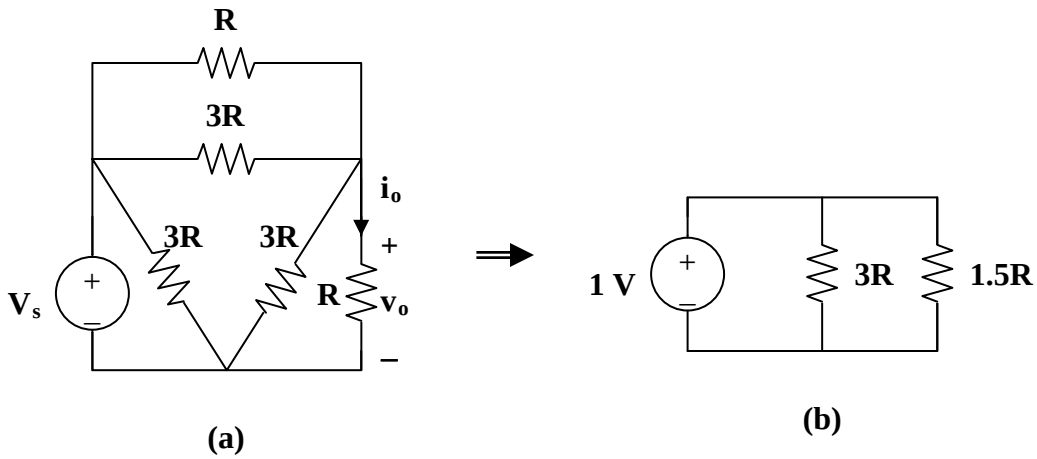

(a) We transform the Y sub-circuit to the equivalent Δ.

$$R \| 3R = \frac{3R^2}{4R} = \frac{3}{4}R, \quad \frac{3}{4}R + \frac{3}{4}R = \frac{3}{2}R$$

$v_o = \dfrac{v_s}{2}$ independent of R

$i_o = v_o/(R)$

When v_s = 1V, v_o = **0.5V**, i_o = **0.5A**

(b) When v_s = 10V, v_o = **5V**, i_o = **5A**

(c) When v_s = 10V and R = 10Ω,
v_o = **5V**, i_o = 10/(10) = **500mA**

www.konkur.in

Chapter 4, Solution 4.

If $I_o = 1$, the voltage across the 6Ω resistor is 6V so that the current through the 3Ω resistor is 2A.

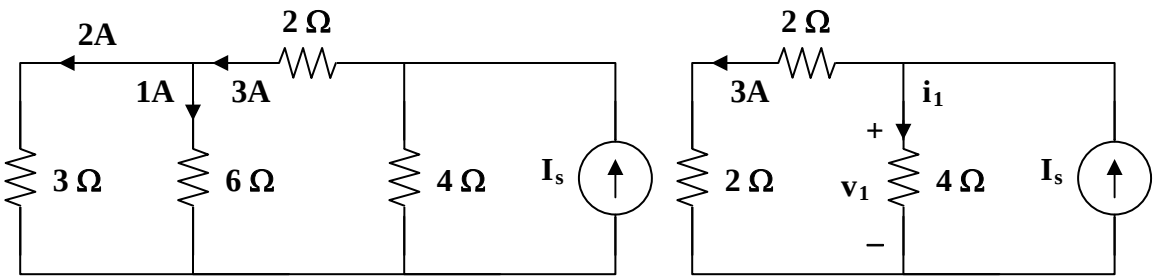

(a) **(b)**

$3\|6 = 2\Omega$, $v_o = 3(4) = 12V$, $i_1 = \dfrac{v_o}{4} = 3A.$

Hence $I_s = 3 + 3 = 6A$

If $I_s = 6A \longrightarrow I_o = 1$

$I_s = 9A \longrightarrow I_o = 9/6 =$ **1.5A**

www.konkur.in

Chapter 4, Solution 5.

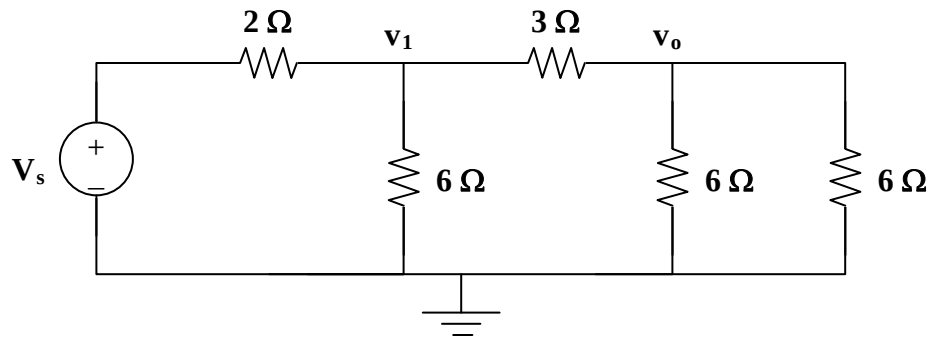

If $v_o = 1V$, $\quad V_1 = \left(\frac{1}{3}\right) + 1 = 2V$

$$V_s = 2\left(\frac{2}{3}\right) + v_1 = \frac{10}{3}$$

If $v_s = \frac{10}{3} \longrightarrow v_o = 1$

Then $v_s = 15 \longrightarrow v_o = \frac{3}{10} x15 =$ **4.5V**

www.konkur.in

Chapter 4, Solution 6.

Due to linearity, from the first experiment,

$$V_o = \frac{1}{3} V_s$$

Applying this to other experiments, we obtain:

Experiment	V_s	V_o
2	48	16 V
3	1 V	0.333 V
4	-6 V	-2V

www.konkur.in

Chapter 4, Solution 7.

If $V_o = 1V$, then the current through the 2-Ω and 4-Ω resistors is ½ = 0.5. The voltage across the 3-Ω resistor is ½ (4 + 2) = 3 V. The total current through the 1-Ω resistor is 0.5 +3/3 = 1.5 A. Hence the source voltage

$$v_s = 1x1.5 + 3 = 4.5 \text{ V}$$

If $v_s = 4.5 \longrightarrow 1V$

Then $v_s = 4 \longrightarrow \frac{1}{4.5} x4 = \underline{0.8889 \text{ V}}$ = **888.9 mV**.

www.konkur.in

Chapter 4, Solution 8.

Let $V_o = V_1 + V_2$, where V_1 and V_2 are due to 9-V and 3-V sources respectively. To find V_1, consider the circuit below.

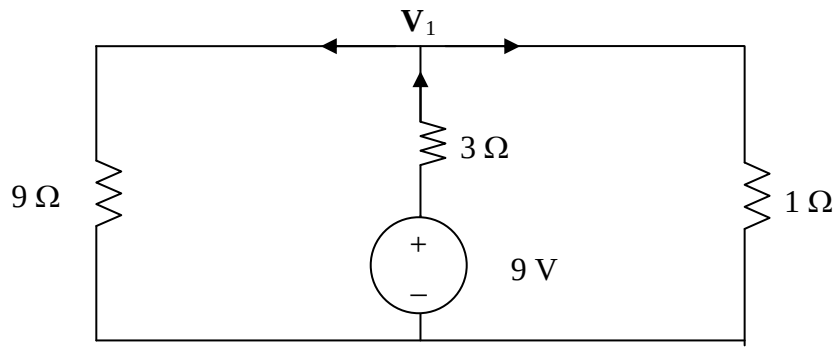

$$\frac{9-V_1}{3} = \frac{V_1}{9} + \frac{V_1}{1} \quad \longrightarrow \quad V_1 = 27/13 = 2.0769$$

To find V_2, consider the circuit below.

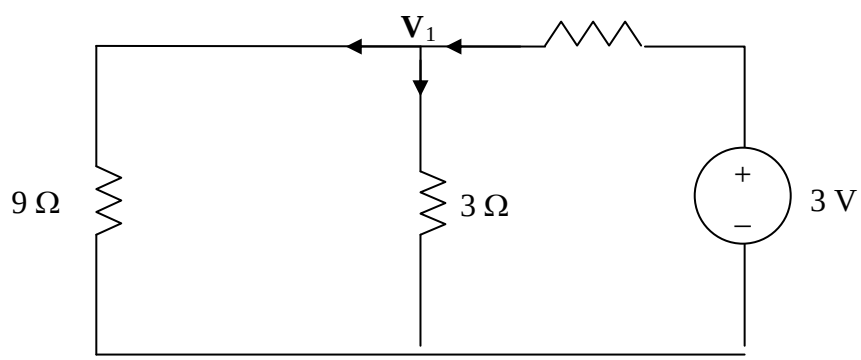

$$\frac{V_2}{9} + \frac{V_2}{3} = \frac{3-V_2}{1} \quad \longrightarrow \quad V_2 = 27/13 = 2.0769$$

$V_o = V_1 + V_2 =$ **4.1538 V**

www.konkur.in

Chapter 4. Solution 9.

Given that I = 4 amps when V_s = 40 volts and I_s = 4 amps and I = 1 amp when V_s = 20 volts and I_s = 0, determine the value of I when V_s = 60 volts and I_s = –2 amps.

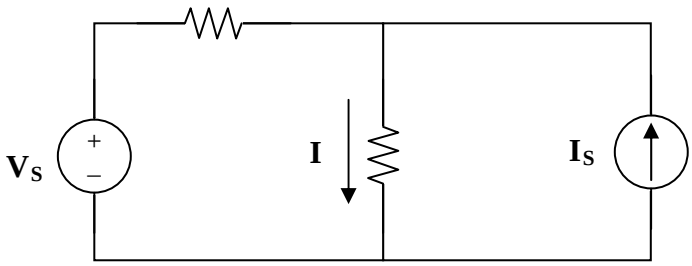

At first this appears to be a difficult problem. However, if you take it one step at a time then it is not as hard as it seems. The important thing to keep in mind is that it is linear!

If I = 1 amp when V_s = 20 and I_s = 0 then I = 2 amps when V_s = 40 volts and I_s = 0 (linearity). This means that I is equal to 2 amps (4–2) when I_s = 4 amps and V_s = 0 (superposition). Thus,

$$I = (60/20)1 + (-2/4)2 = 3-1 = \mathbf{2\ amps}.$$

www.konkur.in

Chapter 4, Solution 10.

Using Fig. 4.78, design a problem to help other students better understand superposition. Note, the letter *k* is a gain you can specify to make the problem easier to solve but must not be zero.

Although there are many ways to work this problem, this is an example based on the same kind of problem asked in the third edition.

Problem

For the circuit in Fig. 4.78, find the terminal voltage V_{ab} using superposition.

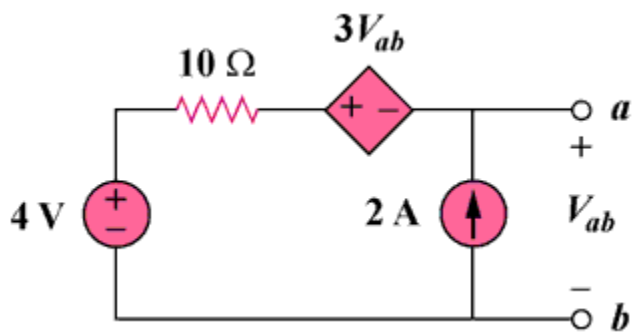

Figure 4.78
For Prob. 4.10.

Solution

Let $v_{ab} = v_{ab1} + v_{ab2}$ where v_{ab1} and v_{ab2} are due to the 4-V and the 2-A sources respectively.

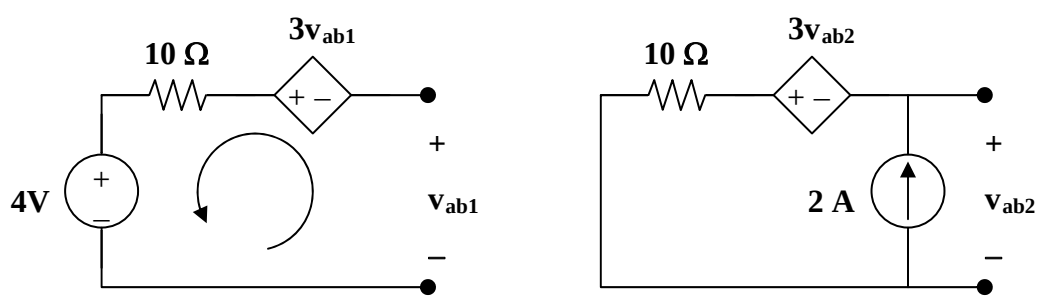

(a) **(b)**

For v_{ab1}, consider Fig. (a). Applying KVL gives,

$$- v_{ab1} - 3\, v_{ab1} + 10x0 + 4 = 0, \text{ which leads to } v_{ab1} = 1 \text{ V}$$

For v_{ab2}, consider Fig. (b). Applying KVL gives,

www.konkur.in

$$-v_{ab2} - 3v_{ab2} + 10x2 = 0, \text{ which leads to } v_{ab2} = 5$$

$$v_{ab} = 1 + 5 = \mathbf{6\ V}$$

www.konkur.in

Chapter 4, Solution 11.

Let $v_o = v_1 + v_2$, where v_1 and v_2 are due to the 6-A and 80-V sources respectively. To find v_1, consider the circuit below.

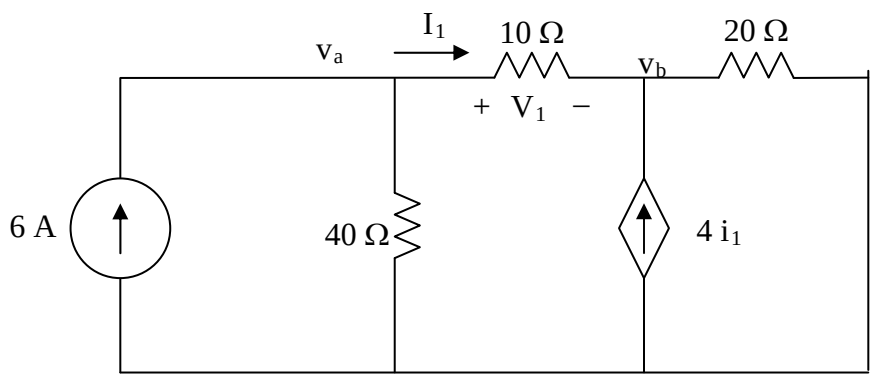

At node a,

$$6 = \frac{v_a}{40} + \frac{v_a - v_b}{10} \longrightarrow 240 = 5v_a - 4v_b \qquad (1)$$

At node b,

$$-I_1 - 4I_1 + (v_b - 0)/20 = 0 \text{ or } v_b = 100I_1$$

But $i_1 = \dfrac{v_a - v_b}{10}$ which leads to $100(v_a - v_b)10 = v_b$ or $v_b = 0.9091v_a$ (2)

Substituting (2) into (1),

$$5v_a - 3.636v_a = 240 \text{ or } v_a = 175.95 \text{ and } v_b = 159.96$$

However, $v_1 = v_a - v_b = 15.99$ V.

To find v_2, consider the circuit below.

www.konkur.in

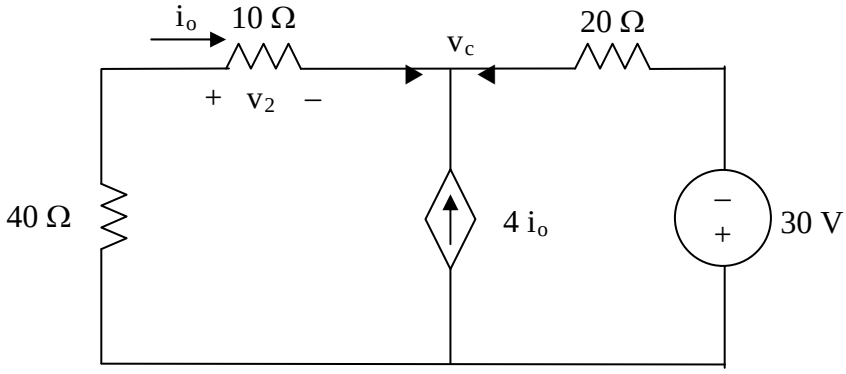

$$\frac{0-v_c}{50}+4i_o+\frac{(-30-v_c)}{20}=0$$

But $i_o=\dfrac{(0-v_c)}{50}$

$$-\frac{5v_c}{50}-\frac{(30+v_c)}{20}=0 \longrightarrow v_c=-10\text{ V}$$

$$i_2=\frac{0-v_c}{50}=\frac{0+10}{50}=\frac{1}{5}$$

$$v_2=10i_2=2\text{ V}$$

$v_o = v_1 + v_2$ =15.99 + 2 = **17.99 V** and $i_o = v_o/10$= **1.799 A**.

Chapter 4, Solution 12.

Let $v_o = v_{o1} + v_{o2} + v_{o3}$, where v_{o1}, v_{o2}, and v_{o3} are due to the 2-A, 12-V, and 19-V sources respectively. For v_{o1}, consider the circuit below.

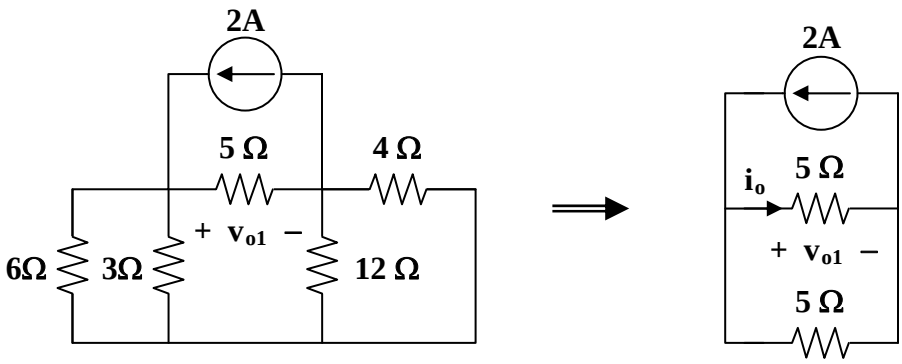

$6||3 = 2$ ohms, $4||12 = 3$ ohms. Hence,

$$i_o = 2/2 = 1, v_{o1} = 5io = 5 \text{ V}$$

For v_{o2}, consider the circuit below.

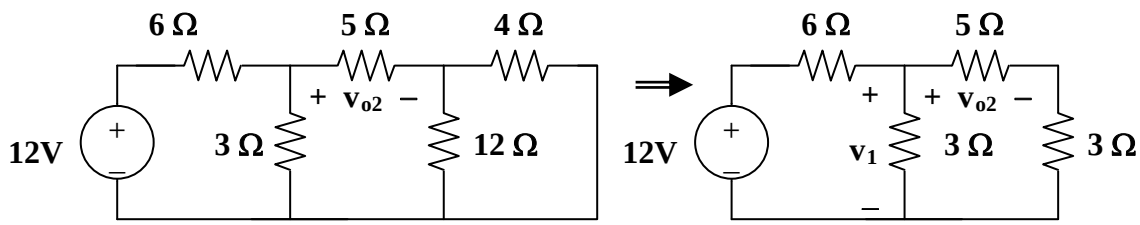

$3||8 = 24/11$, $v_1 = [(24/11)/(6 + 24/11)]12 = 16/5$

$$v_{o2} = (5/8)v_1 = (5/8)(16/5) = 2 \text{ V}$$

For v_{o3}, consider the circuit shown below.

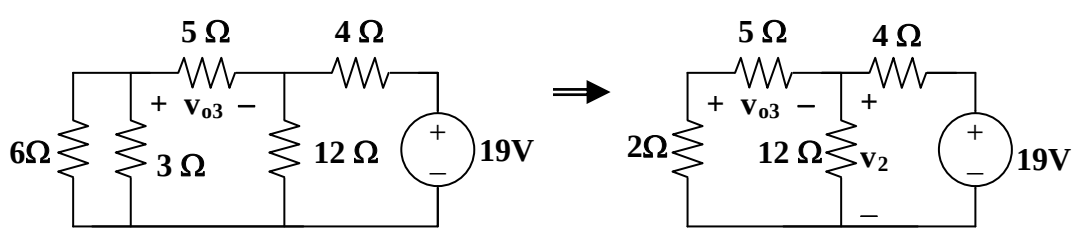

$7||12 = (84/19)$ ohms, $v_2 = [(84/19)/(4 + 84/19)]19 = 9.975$

$$v = (-5/7)v2 = -7.125$$

$$v_o = 5 + 2 – 7.125 = \mathbf{-125\ mV}$$

Chapter 4, Solution 13.

Let $v_o = v_1 + v_2 + v_3$, where v_1, v_2, and v_3 are due to the independent sources. To find v_1, consider the circuit below.

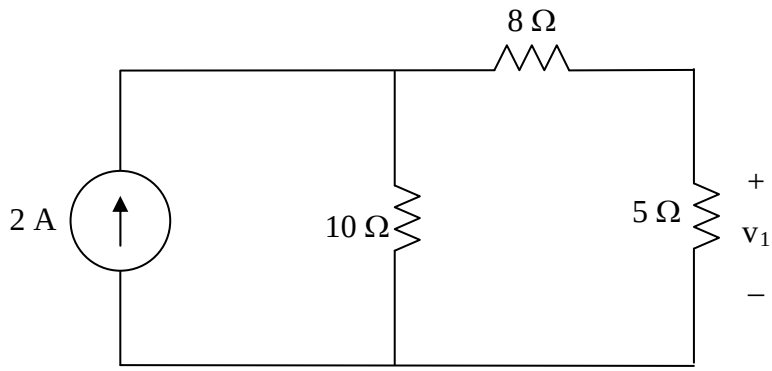

$$v_1 = 5x\frac{10}{10+8+5}x2 = 4.3478$$

To find v_2, consider the circuit below.

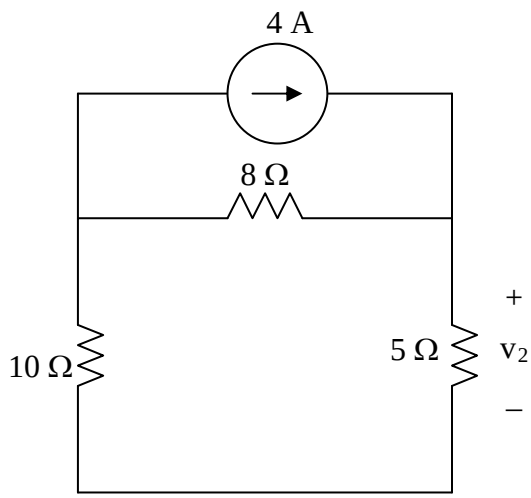

$$v_2 = 5x\frac{8}{8+10+5}x4 = 6.9565$$

To find v_3, consider the circuit below.

www.konkur.in

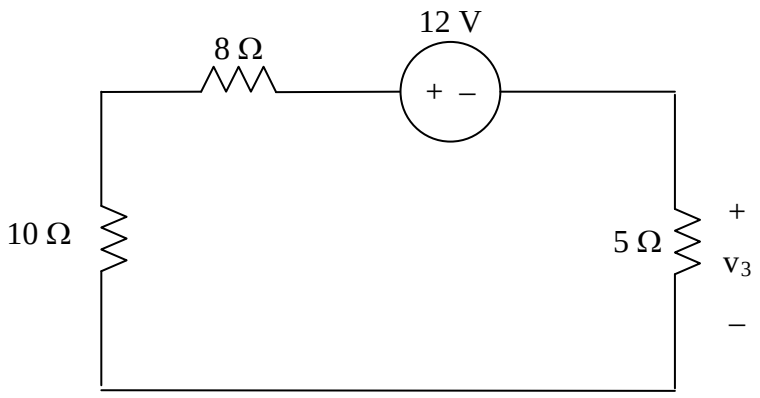

$$v_3 = -12\left(\frac{5}{5+10+8}\right) = -2.6087$$

$$v_o = v_1 + v_2 + v_3 = \underline{8.6956\ \text{V}} = \mathbf{8.696V}.$$

www.konkur.in

Chapter 4, Solution 14.

Let $v_o = v_{o1} + v_{o2} + v_{o3}$, where v_{o1}, v_{o2} , and v_{o3}, are due to the 20-V, 1-A, and 2-A sources respectively. For v_{o1}, consider the circuit below.

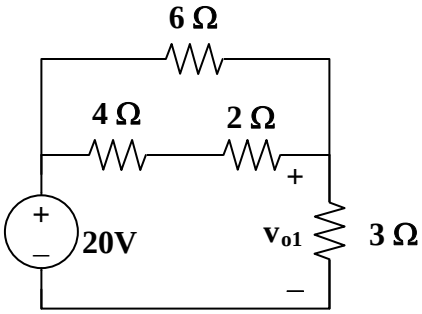

$$6||(4 + 2) = 3 \text{ ohms}, v_{o1} = (½)20 = 10 \text{ V}$$

For v_{o2}, consider the circuit below.

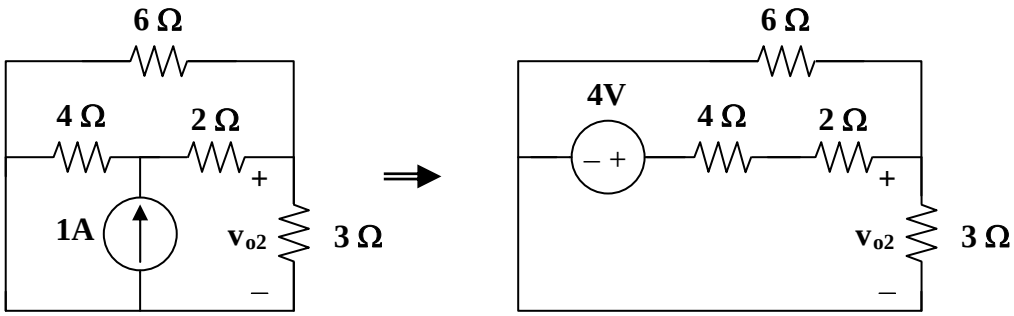

$$3||6 = 2 \text{ ohms}, v_{o2} = [2/(4 + 2 + 2)]4 = 1 \text{ V}$$

For v_{o3}, consider the circuit below.

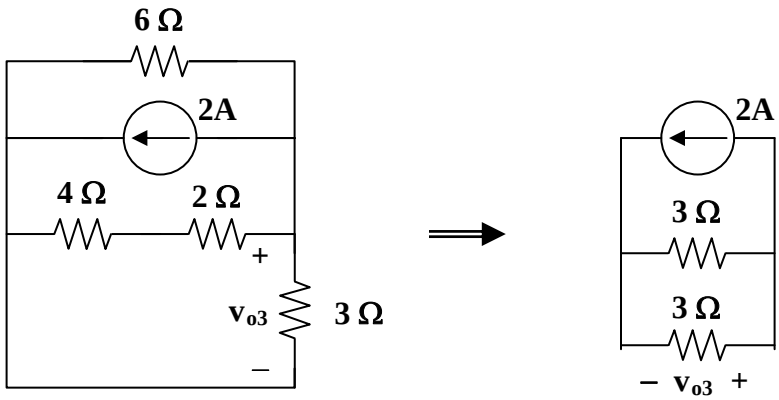

$$6||(4 + 2) = 3, v_{o3} = (-1)3 = -3$$

$$v_o = 10 + 1 - 3 = \mathbf{8\ V}$$

www.konkur.in

Chapter 4, Solution 15.

Let $i = i_1 + i_2 + i_3$, where i_1, i_2, and i_3 are due to the 20-V, 2-A, and 16-V sources. For i_1, consider the circuit below.

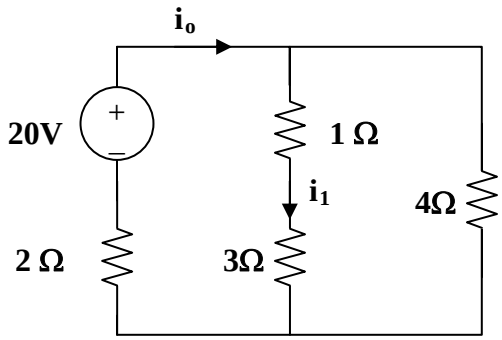

$4||(3 + 1) = 2$ ohms, Then $i_o = [20/(2 + 2)] = 5$ A, $i_1 = i_o/2 = 2.5$ A

For i_3, consider the circuit below.

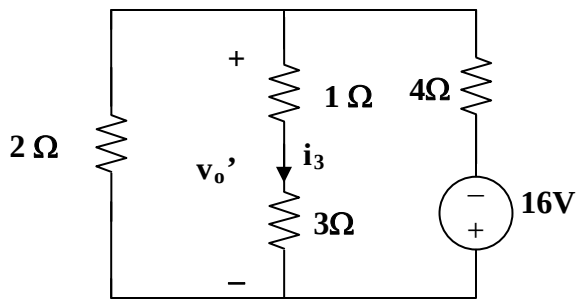

$2||(1 + 3) = 4/3$, $v_o' = [(4/3)/((4/3) + 4)](-16) = -4$

$i_3 = v_o'/4 = -1$

For i_2, consider the circuit below.

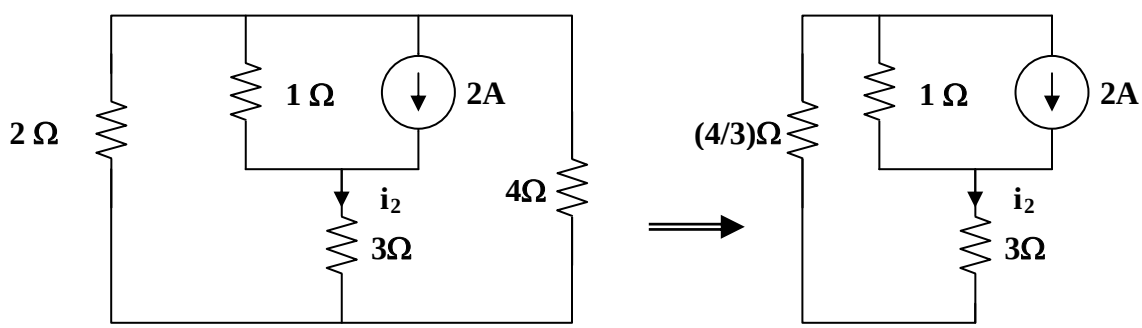

$2||4 = 4/3$, $3 + 4/3 = 13/3$

www.konkur.in

Using the current division principle.

$$i_2 = [1/(1 + 13/2)]2 = 3/8 = 0.375$$

$$i = 2.5 + 0.375 - 1 = \mathbf{1.875\ A}$$

$$p = i^2R = (1.875)^2 3 = \mathbf{10.55\ watts}$$

www.konkur.in

Chapter 4, Solution 16.

Let $i_o = i_{o1} + i_{o2} + i_{o3}$, where i_{o1}, i_{o2}, and i_{o3} are due to the 12-V, 4-A, and 2-A sources. For i_{o1}, consider the circuit below.

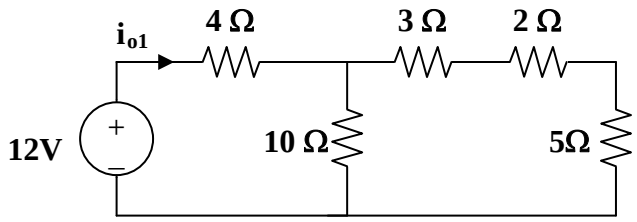

$$10||(3 + 2 + 5) = 5 \text{ ohms}, \quad i_{o1} = 12/(5 + 4) = (12/9) \text{ A}$$

For i_{o2}, consider the circuit below.

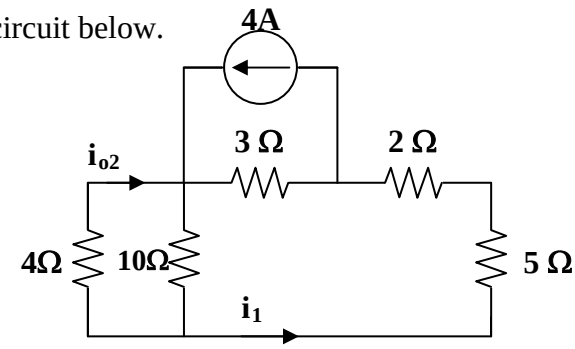

$$2 + 5 + 4||10 = 7 + 40/14 = 69/7$$
$$i_1 = [3/(3 + 69/7)]4 = 84/90, \quad i_{o2} = [-10/(4 + 10)]i_1 = -6/9$$

For i_{o3}, consider the circuit below.

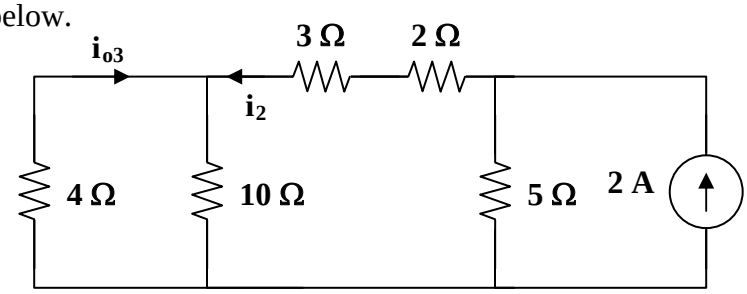

$$3 + 2 + 4||10 = 5 + 20/7 = 55/7$$

$$i_2 = [5/(5 + 55/7)]2 = 7/9, \quad i_{o3} = [-10/(10 + 4)]i_2 = -5/9$$

$$i_o = (12/9) – (6/9) – (5/9) = 1/9 = \mathbf{111.11\ mA}$$

www.konkur.in

Chapter 4, Solution 17.

Let $v_x = v_{x1} + v_{x2} + v_{x3}$, where v_{x1},v_{x2}, and v_{x3} are due to the 90-V, 6-A, and 40-V sources. For v_{x1}, consider the circuit below.

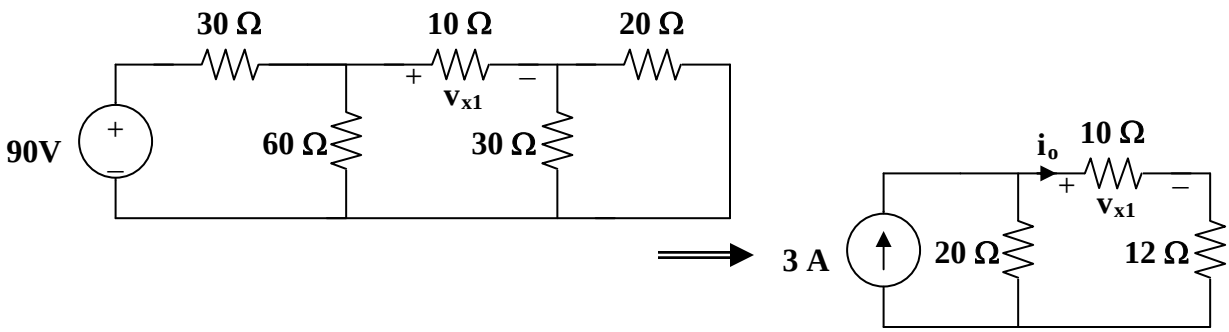

$$20||30 = 12 \text{ ohms}, \quad 60||30 = 20 \text{ ohms}$$

By using current division,

$$i_o = [20/(22 + 20)]3 = 60/42, \quad v_{x1} = 10i_o = 600/42 = 14.286 \text{ V}$$

For v_{x2}, consider the circuit below.

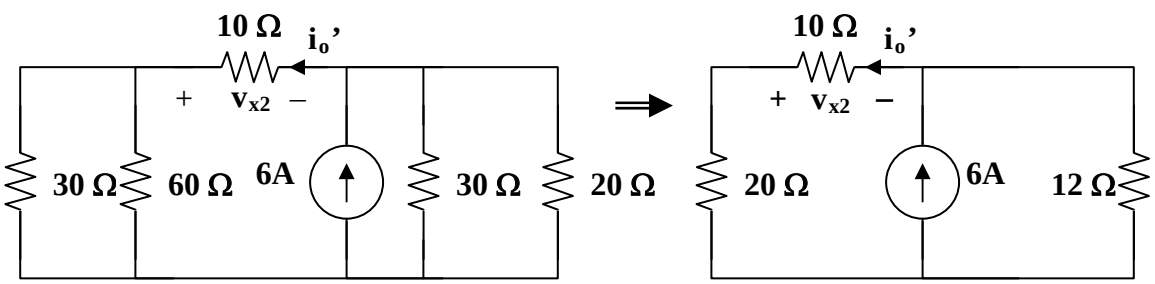

$$i_o' = [12/(12 + 30)]6 = 72/42, \quad v_{x2} = -10i_o' = -17.143 \text{ V}$$

For v_{x3}, consider the circuit below.

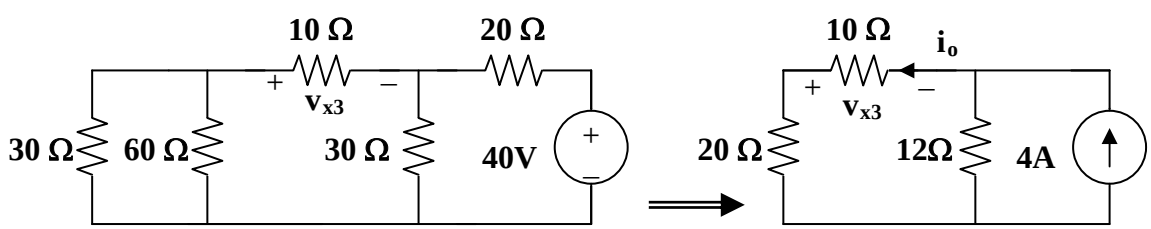

$$i_o'' = [12/(12 + 30)]2 = 24/42, \quad v_{x3} = -10i_o'' = -5.714 = [12/(12 + 30)]2 = 24/42,$$
$$v_{x3} = -10i_o'' = -5.714$$
$$= [12/(12 + 30)]2 = 24/42, \quad v_{x3} = -10i_o'' = -5.714$$
$$v_x = 14.286 - 17.143 - 5.714 = \mathbf{-8.571\ V}$$

www.konkur.in

Chapter 4, Solution 18.

Let $V_o = V_1 + V_2$, where V_1 and V_2 are due to 10-V and 2-A sources respectively. To find V_1, we use the circuit below.

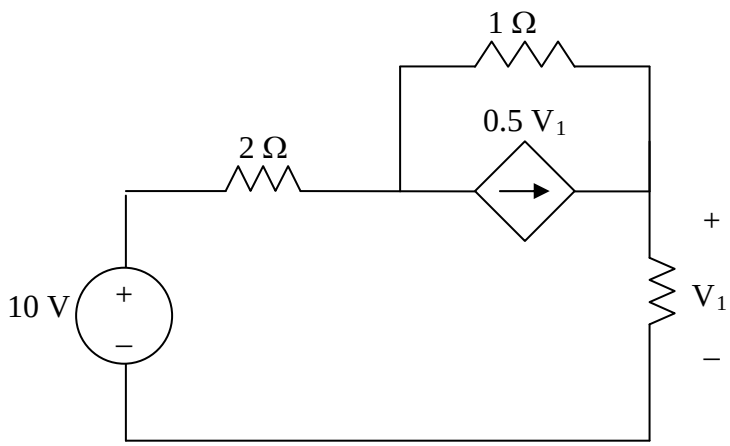

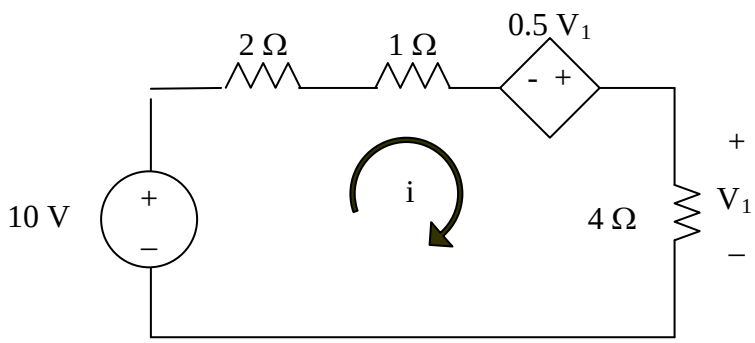

$$-10 + 7i - 0.5V_1 = 0$$

But $V_1 = 4i$

$$`10 = 7i - 2i = 5i \longrightarrow i = 2, \quad V_1 = 8 \text{ V}$$

www.konkur.in

To find V_2, we use the circuit below.

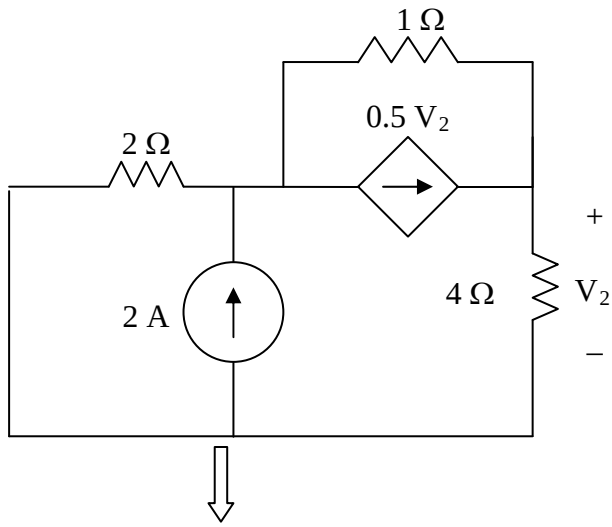

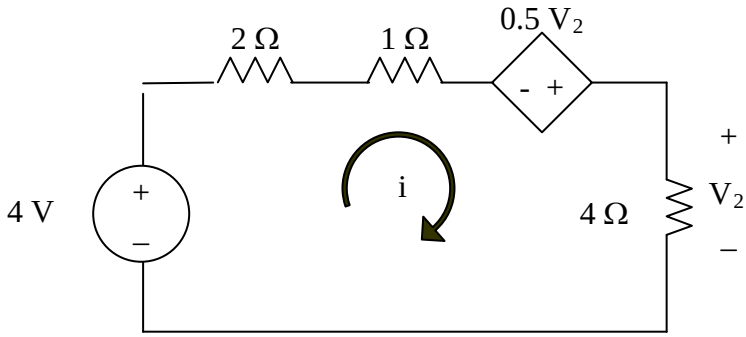

$-4 + 7i - 0.5V_2 = 0$

But $V_2 = 4i$

$4 = 7i - 2i = 5i \longrightarrow i = 0.8, \quad V_2 = 4i = 3.2$

$V_o = V_1 + V_2 = 8 + 3.2 =$ **11.2 V**

www.konkur.in

Chapter 4, Solution 19.

Let $v_x = v_1 + v_2$, where v_1 and v_2 are due to the 4-A and 6-A sources respectively.

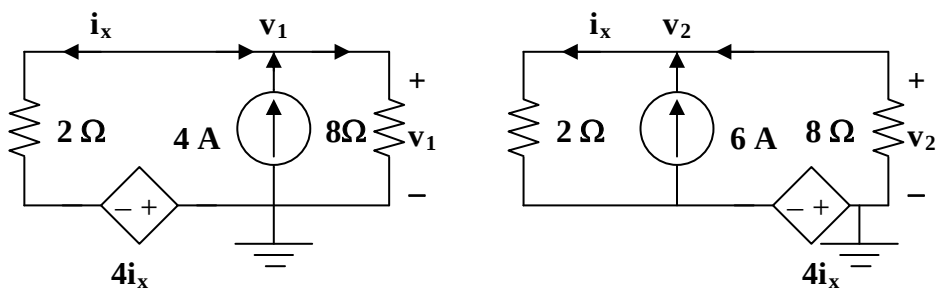

(a) **(b)**

To find v_1, consider the circuit in Fig. (a).

$$v_1/8 - 4 + (v_1 - (-4i_x))/2 = 0 \text{ or } (0.125+0.5)v_1 = 4 - 2i_x \text{ or } v_1 = 6.4 - 3.2i_x$$

But, $i_x = (v_1 - (-4i_x))/2$ or $i_x = -0.5v_1$. Thus,

$$v_1 = 6.4 + 3.2(0.5v_1), \text{ which leads to } v_1 = -6.4/0.6 = -10.667$$

To find v_2, consider the circuit shown in Fig. (b).

$$v_2/8 - 6 + (v_2 - (-4i_x))/2 = 0 \text{ or } v_2 + 3.2i_x = 9.6$$

But $i_x = -0.5v_2$. Therefore,

$$v_2 + 3.2(-0.5v_2) = 9.6 \text{ which leads to } v_2 = -16$$

Hence, $v_x = -10.667 - 16 = \mathbf{-26.67V}$.

Checking,

$$i_x = -0.5v_x = 13.333\text{A}$$

Now all we need to do now is sum the currents flowing out of the top node.

$$13.333 - 6 - 4 + (-26.67)/8 = 3.333 - 3.333 = 0$$

www.konkur.in

Chapter 4, Solution 20.

Convert the voltage sources to current sources and obtain the circuit shown below.

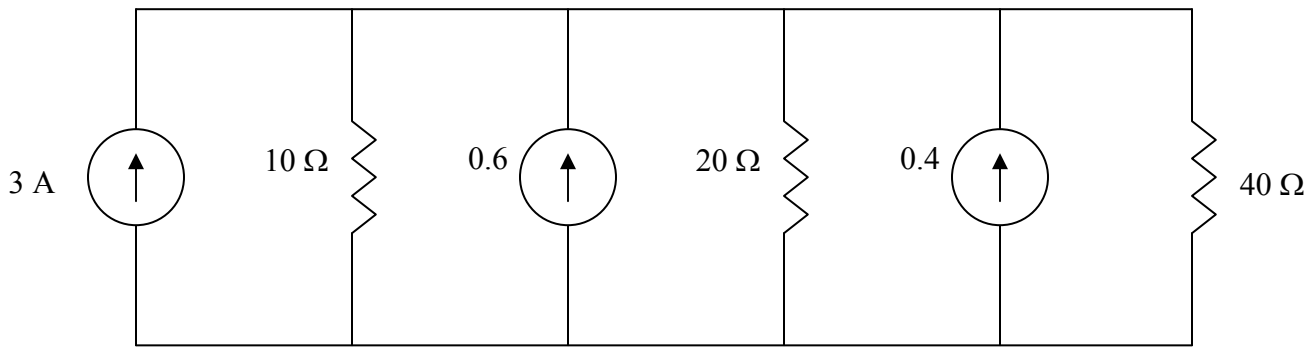

$$\frac{1}{R_{eq}} = \frac{1}{10} + \frac{1}{20} + \frac{1}{40} = 0.1 + 0.05 + 0.025 = 0.175 \longrightarrow R_{eq} = 5.714\ \Omega$$

$I_{eq} = 3 + 0.6 + 0.4 = 4$

Thus, the circuit is reduced as shown below. Please note, we that this is merely an exercise in combining sources and resistors. The circuit we have is an equivalent circuit which has no real purpose other than to demonstrate source transformation. In a practical situation, this would need some kind of reference and a use to an external circuit to be of real value.

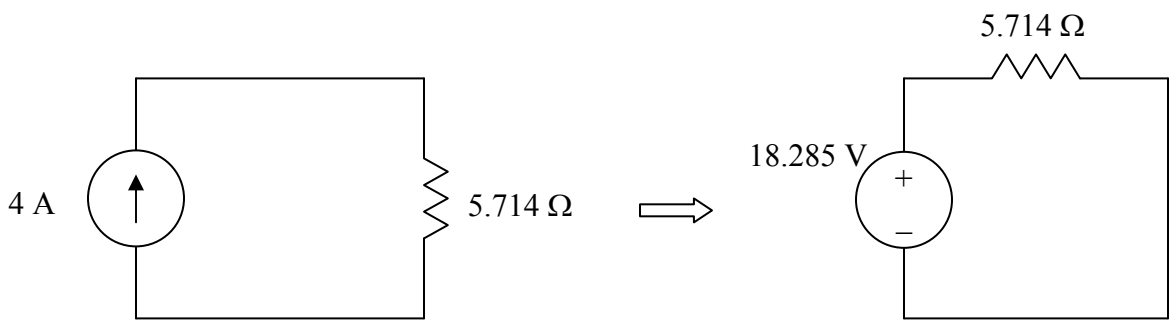

4.21 Using Fig. 4.89, design a problem to help other students to better understand source transformation.

Although there are many ways to work this problem, this is an example based on the same kind of problem asked in the third edition.

Problem

Apply source transformation to determine v_o and i_o in the circuit in Fig. 4.89.

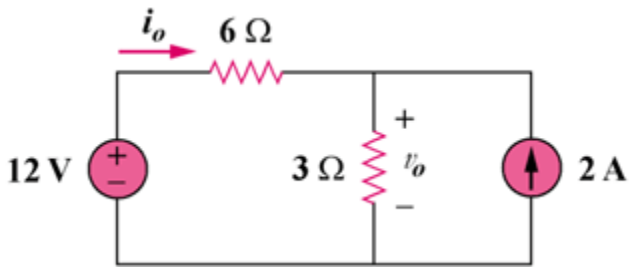

Figure 4.89

Solution

To get i_o, transform the current sources as shown in Fig. (a).

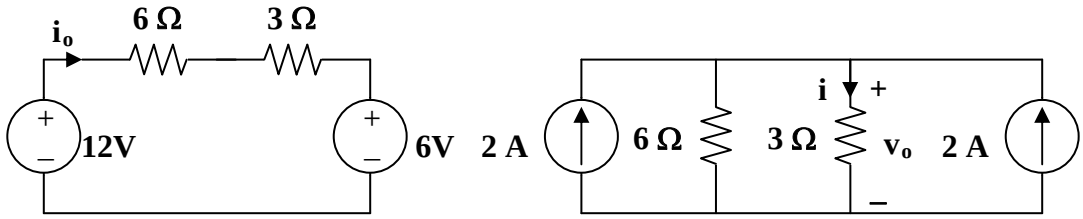

(a) **(b)**

From Fig. (a), $-12 + 9i_o + 6 = 0$, therefore i_o = **666.7 mA**

To get v_o, transform the voltage sources as shown in Fig. (b).

$$i = [6/(3 + 6)](2 + 2) = 8/3$$

$$v_o = 3i = \mathbf{8\ V}$$

www.konkur.in

Chapter 4, Solution 22.

We transform the two sources to get the circuit shown in Fig. (a).

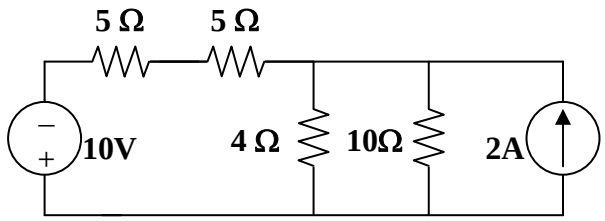

(a)

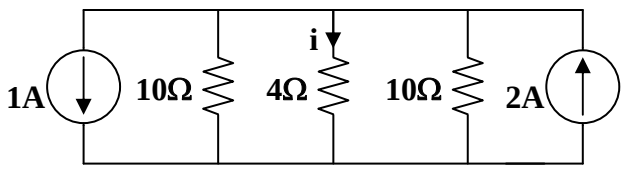

(b)

We now transform only the voltage source to obtain the circuit in Fig. (b).

$$10||10 = 5 \text{ ohms}, \quad i = [5/(5 + 4)](2 - 1) = 5/9 = \mathbf{555.5\ mA}$$

www.konkur.in

Chapter 4, Solution 23

If we transform the voltage source, we obtain the circuit below.

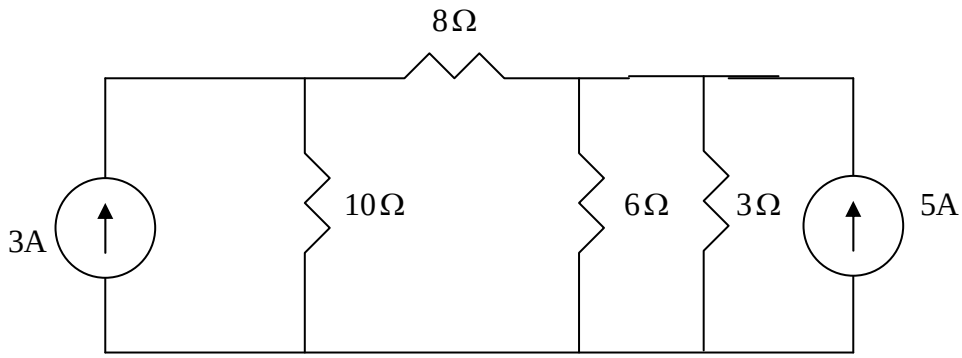

3//6 = 2-ohm. Convert the current sources to voltages sources as shown below.

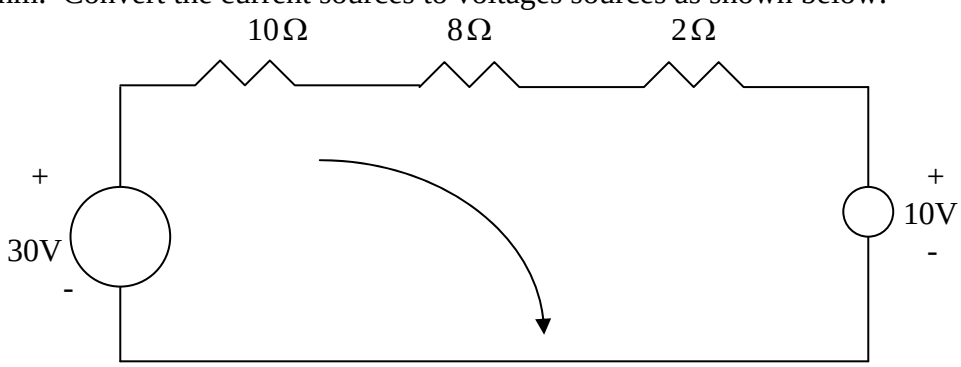

Applying KVL to the loop gives

$-30+10+I(10+8+2)=0 \longrightarrow$ I = **1 A**

$$p = VI = I^2R = \mathbf{8\ W}$$

www.konkur.in

Chapter 4, Solution 24.

Transform the two current sources in parallel with the resistors into their voltage source equivalents yield,

a 30-V source in series with a 10-Ω resistor and a $20V_x$-V sources in series with a 10-Ω resistor.

We now have the following circuit,

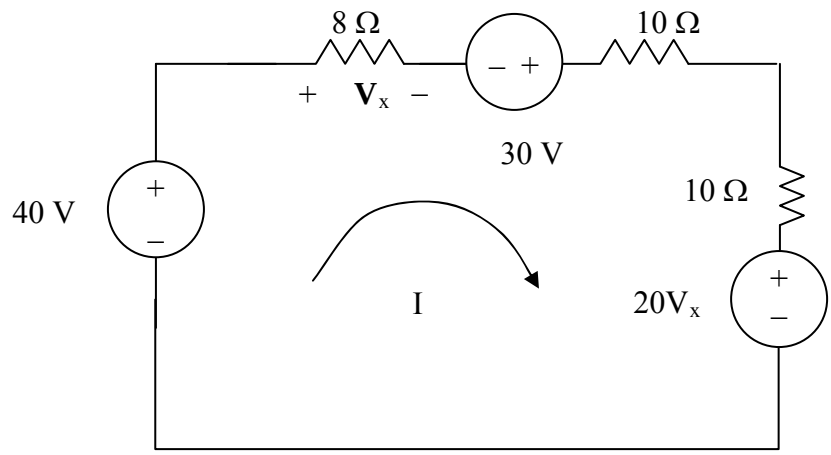

We now write the following mesh equation and constraint equation which will lead to a solution for V_x,

$28I - 70 + 20V_x = 0$ or $28I + 20V_x = 70$, but $V_x = 8I$ which leads to

$28I + 160I = 70$ or $I = 0.3723$ A or $V_x =$ **2.978 V**.

www.konkur.in

Chapter 4, Solution 25.

Transforming only the current source gives the circuit below.

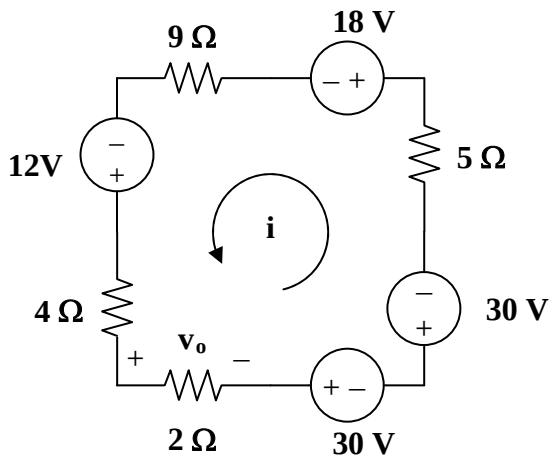

Applying KVL to the loop gives,

$$-(4 + 9 + 5 + 2)i + 12 - 18 - 30 - 30 = 0$$

$$20i = -66 \text{ which leads to } i = -3.3$$

$v_o = 2i = \mathbf{-6.6\ V}$

www.konkur.in

Chapter 4, Solution 26.

Transforming the current sources gives the circuit below.

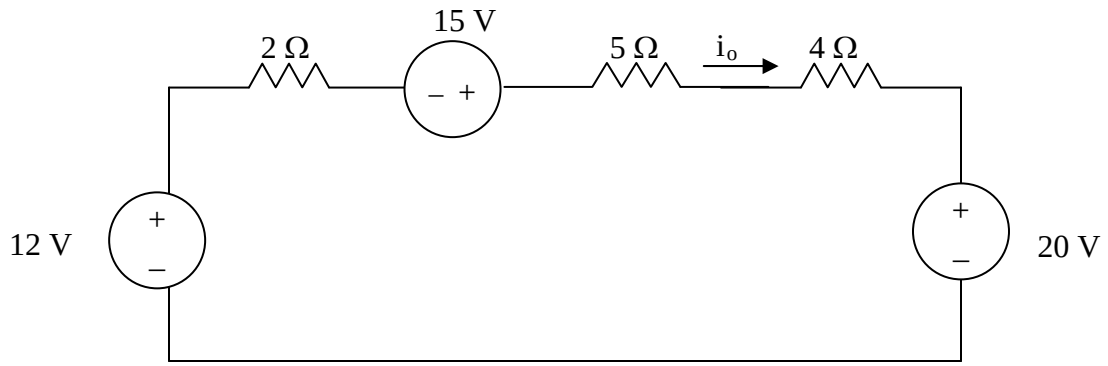

$-12 + 11i_o - 15 + 20 = 0$ or $11i_o = 7$ or $i_o =$ **636.4 mA**.

www.konkur.in

Chapter 4, Solution 27.

Transforming the voltage sources to current sources gives the circuit in Fig. (a).

$$10||40 = 8 \text{ ohms}$$

Transforming the current sources to voltage sources yields the circuit in Fig. (b).
Applying KVL to the loop,

$$-40 + (8 + 12 + 20)i + 200 = 0 \text{ leads to } i = -4$$

$$v_x \quad 12i = \mathbf{-48\ V}$$

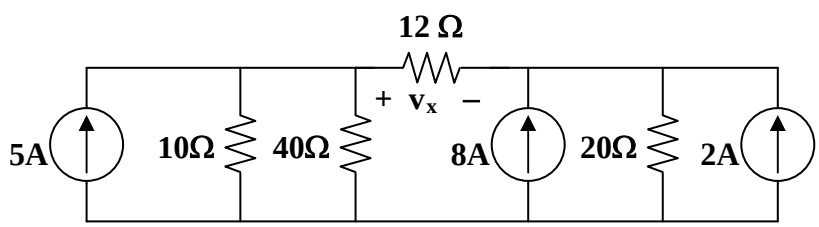

(a)

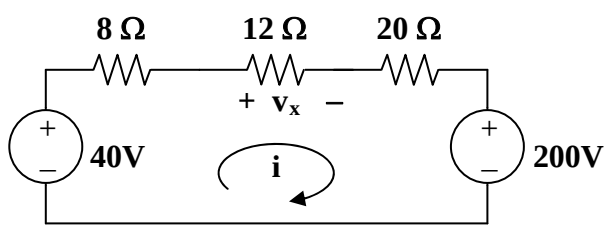

(b)

www.konkur.in

Chapter 4, Solution 28.

Convert the dependent current source to a dependent voltage source as shown below.

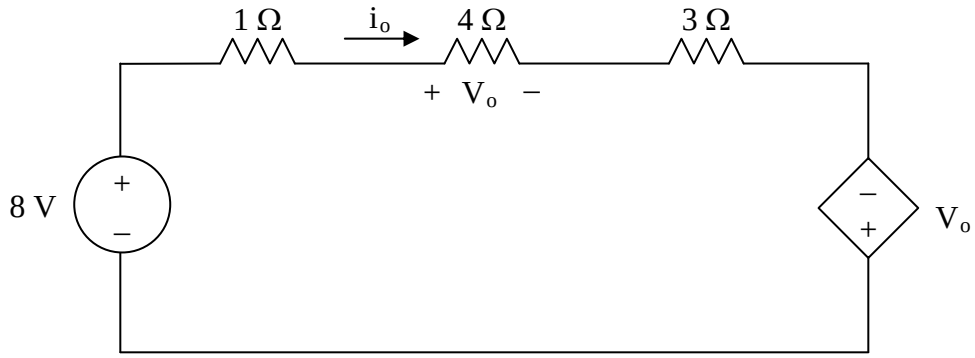

Applying KVL,

$$-8 + i_o(1+4+3) - V_o = 0$$

But $V_o = 4i_o$

$$-8 + 8i_o - 4i_o = 0 \quad \longrightarrow \quad i_o = \underline{2\ \text{A}}$$

www.konkur.in

Chapter 4, Solution 29.

Transform the dependent voltage source to a current source as shown in Fig. (a). 2||4 = (4/3) k ohms

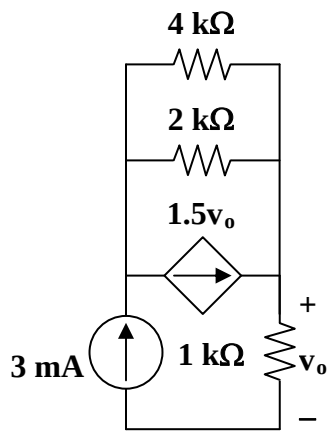

(a)

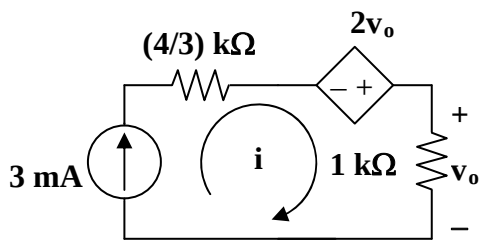

(b)

It is clear that i = 3 mA which leads to v_o = 1000i = **3 V**

If the use of source transformations was not required for this problem, the actual answer could have been determined by inspection right away since the only current that could have flowed through the 1 k ohm resistor is 3 mA.

www.konkur.in

Chapter 4, Solution 30

Transform the dependent current source as shown below.

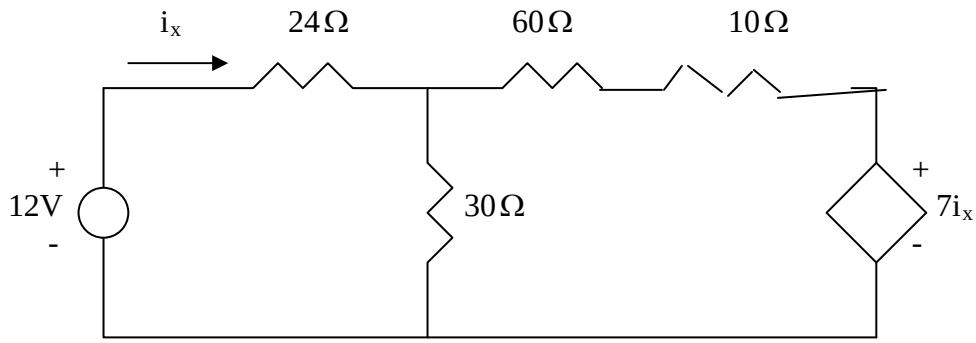

Combine the 60-ohm with the 10-ohm and transform the dependent source as shown below.

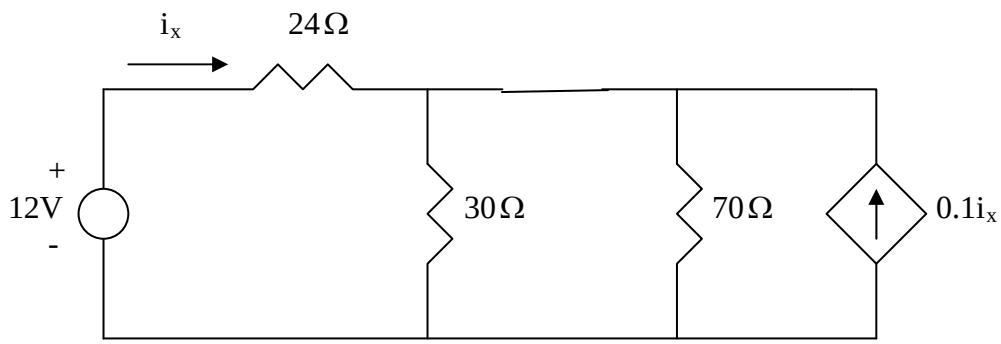

Combining 30-ohm and 70-ohm gives 30//70 = 70x30/100 = 21-ohm. Transform the dependent current source as shown below.

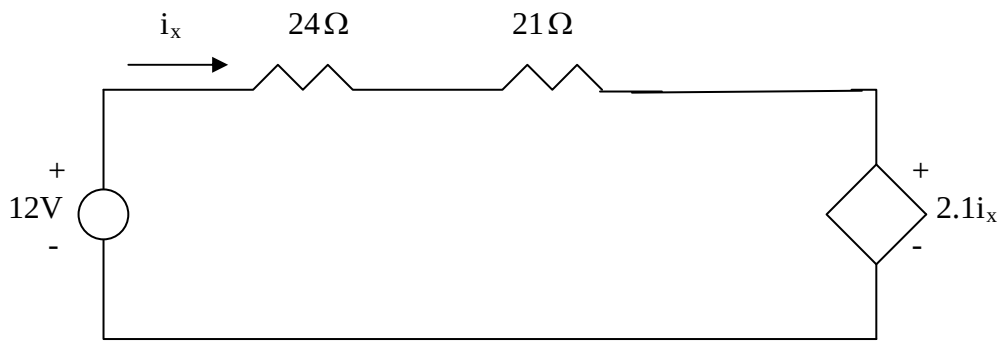

Applying KVL to the loop gives

$$45i_x - 12 + 2.1i_x = 0 \quad \longrightarrow \quad i_x = \frac{12}{47.1} = 254.8 \text{ mA}.$$

www.konkur.in

Chapter 4, Solution 31.

Transform the dependent source so that we have the circuit in Fig. (a). 6||8 = (24/7) ohms. Transform the dependent source again to get the circuit in Fig. (b).

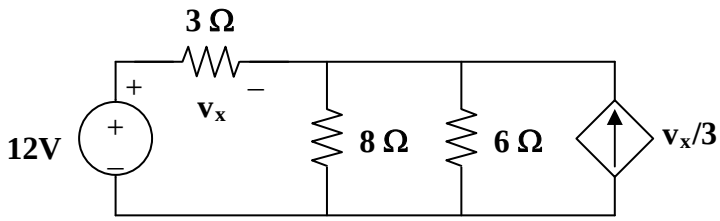

(a)

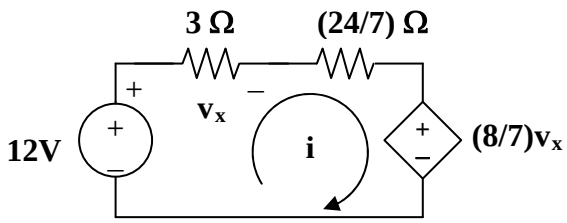

(b)

From Fig. (b),

$$v_x = 3i, \text{ or } i = v_x/3.$$

Applying KVL,

$$-12 + (3 + 24/7)i + (24/21)v_x = 0$$

$$12 = [(21 + 24)/7]v_x/3 + (8/7)v_x, \text{ leads to } v_x = 84/23 = \mathbf{3.652\ V}$$

www.konkur.in

Chapter 4, Solution 32.

As shown in Fig. (a), we transform the dependent current source to a voltage source,

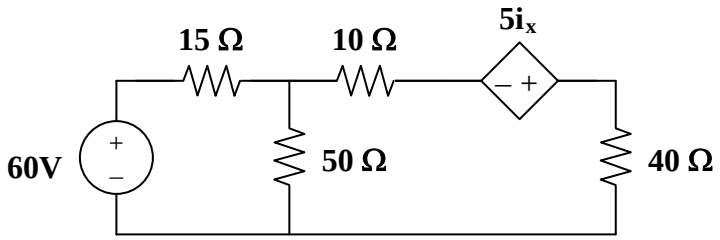

(a)

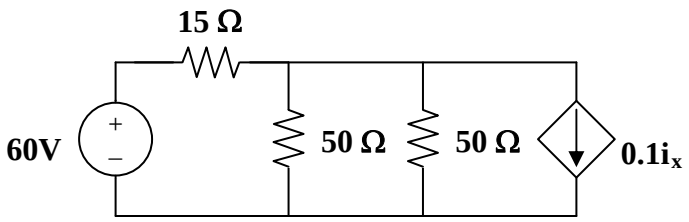

(b)

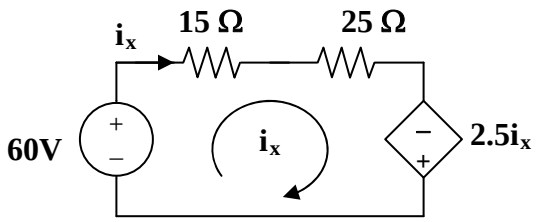

(c)

In Fig. (b), 50||50 = 25 ohms. Applying KVL in Fig. (c),

$-60 + 40i_x - 2.5i_x = 0$, or $i_x =$ **1.6 A**

www.konkur.in

Chapter 4, Solution 33.

Determine the Thevenin equivalent circuit as seen by the 5-ohm resistor. Then calculate the current flowing through the 5-ohm resistor.

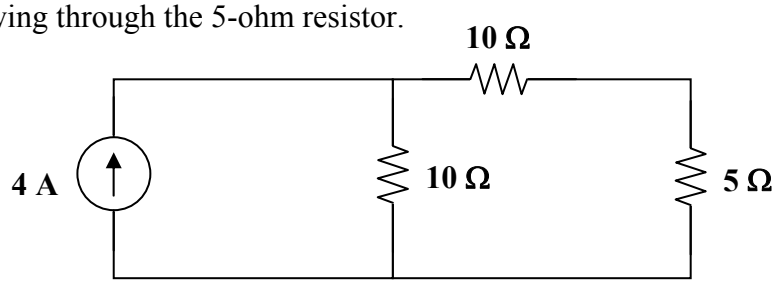

Solution

Step 1. We need to find V_{oc} and I_{sc}. To do this, we will need two circuits, label the appropriate unknowns and solve for V_{oc}, I_{sc}, and then R_{eq} which is equal to V_{oc}/I_{sc}.

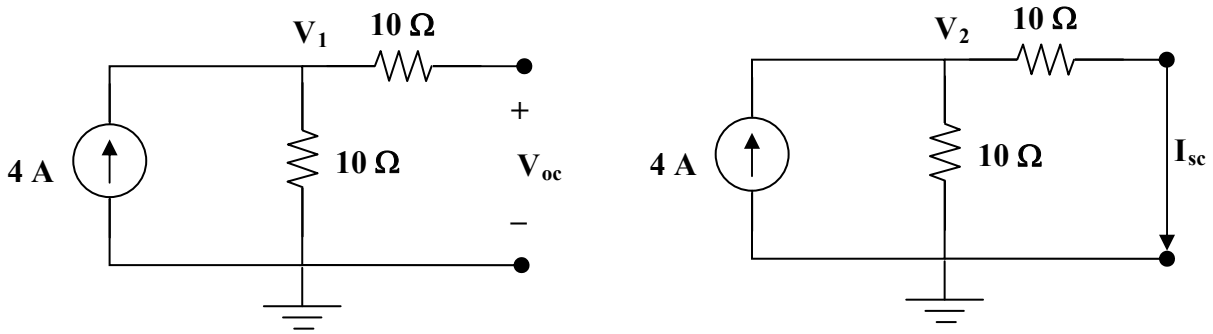

Note, in the first case $V_1 = V_{oc}$ and the nodal equation at 1 produces $-4+(V_1-0)/10 = 0$. In the second case, $I_{sc} = (V_2-0)/10$ where the nodal equation at 2 produces, $-4+[(V_2-0)/10]+[(V_2-0)/10] = 0$.

Step 2. $0.1V_1 = 4$ or $V_1 =$ **40 V** $= V_{oc} = V_{Thev}$. Next, $(0.1+0.1)V_2 = 4$ or $0.2V_2 = 4$ or $V_2 = 20$ V. Thus, $I_{sc} = 20/10 = 2$ A. This leads to $R_{eq} = 40/2 =$ **20 Ω**. We can check our results by using source transformation. The 4-amp current source in parallel with the 10-ohm resistor can be replaced by a 40-volt voltage source in series with a 10-ohm resistor which in turn is in series with the other 10-ohm resistor yielding the same Thevenin equivalent circuit. Once the 5-ohm resistor is connected to the Thevenin equivalent circuit, we now have 40 V across 25 Ω producing a current of **1.6 A**.

4.34 Using Fig. 4.102, design a problem that will help other students better understand Thevenin equivalent circuits.

Although there are many ways to work this problem, this is an example based on the same kind of problem asked in the third edition.

Problem

Find the Thevenin equivalent at terminals ***a-b*** of the circuit in Fig. 4.102.

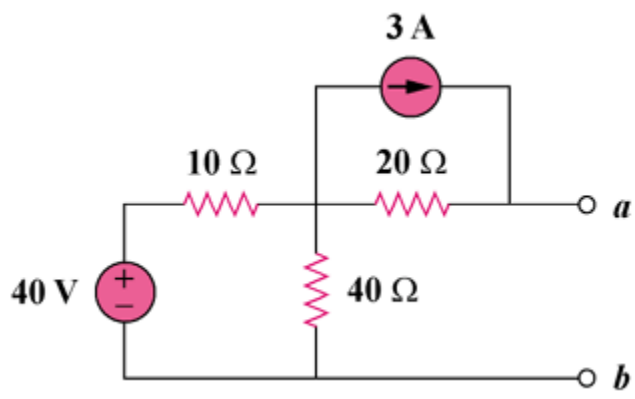

Figure 4.102

Solution

To find R_{Th}, consider the circuit in Fig. (a).

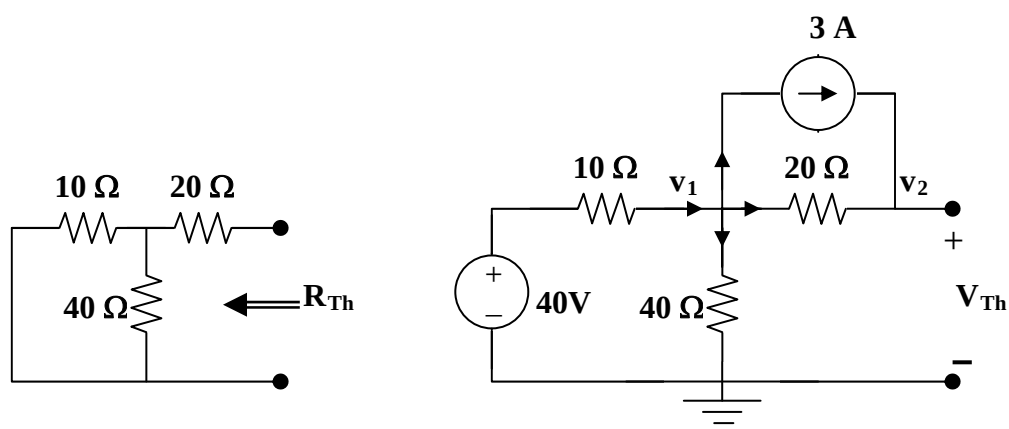

(a) **(b)**

$$R_{Th} = 20 + 10||40 = 20 + 400/50 = \mathbf{28\ ohms}$$

To find V_{Th}, consider the circuit in Fig. (b).

www.konkur.in

At node 1, $(40 - v_1)/10 = 3 + [(v_1 - v_2)/20] + v_1/40$, $40 = 7v_1 - 2v_2$ (1)

At node 2, $3 + (v1 - v2)/20 = 0$, or $v1 = v2 - 60$ (2)

Solving (1) and (2), $v_1 = 32$ V, $v_2 = 92$ V, and $V_{Th} = v_2 =$ **92 V**

www.konkur.in

Chapter 4, Solution 35.

To find R_{Th}, consider the circuit in Fig. (a).

$$R_{Th} = R_{ab} = 6||3 + 12||4 = 2 + 3 = 5 \text{ ohms}$$

To find V_{Th}, consider the circuit shown in Fig. (b).

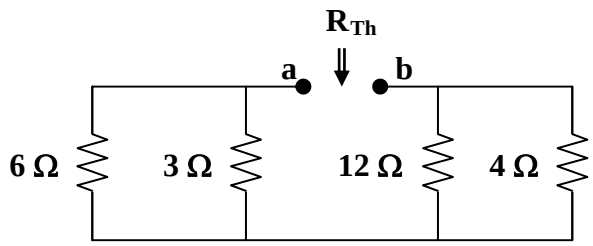

(a)

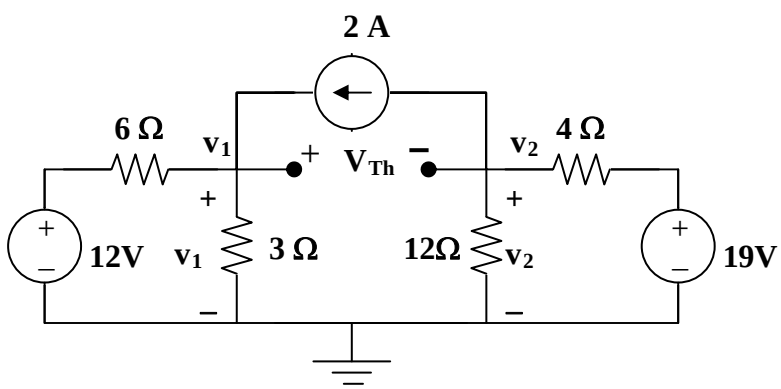

(b)

At node 1, $2 + (12 - v_1)/6 = v_1/3$, or $v_1 = 8$

At node 2, $(19 - v_2)/4 = 2 + v_2/12$, or $v_2 = 33/4$

But, $-v_1 + V_{Th} + v_2 = 0$, or $V_{Th} = v_1 - v_2 = 8 - 33/4 = -0.25$

www.konkur.in

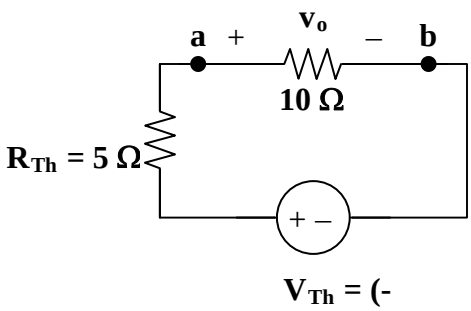

$v_o = V_{Th}/2 = -0.25/2 =$ **–125 mV**

www.konkur.in

Chapter 4, Solution 36.

Remove the 30-V voltage source and the 20-ohm resistor.

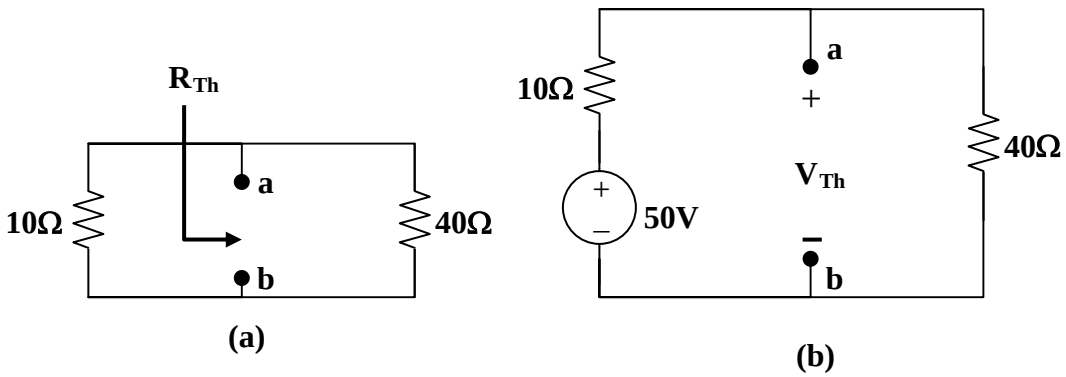

From Fig. (a), $R_{Th} = 10||40 = 8$ ohms

From Fig. (b), $V_{Th} = (40/(10 + 40))50 = 40V$

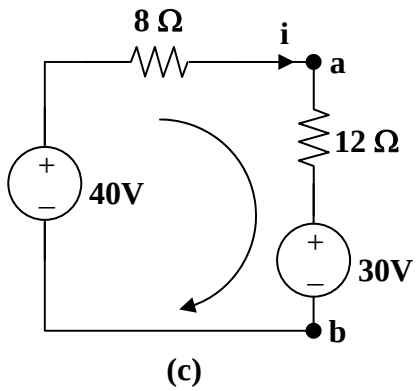

The equivalent circuit of the original circuit is shown in Fig. (c). Applying KVL,

$$30 - 40 + (8 + 12)i = 0, \text{ which leads to } i = \mathbf{500mA}$$

www.konkur.in

Chapter 4, Solution 37

R_N is found from the circuit below.

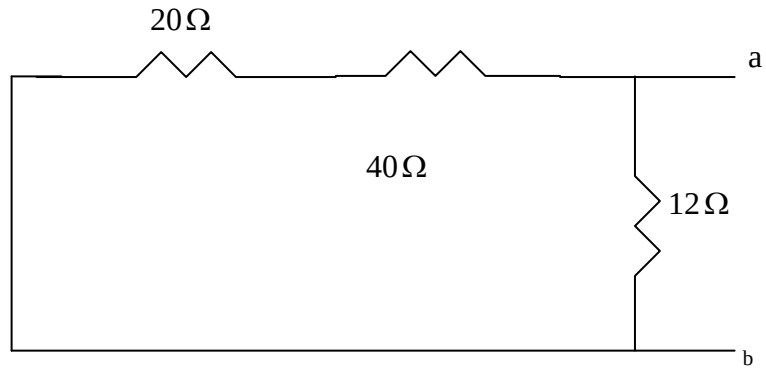

$R_N = 12//(20+40) = \mathbf{10\ \Omega}$.

I_N is found from the circuit below.

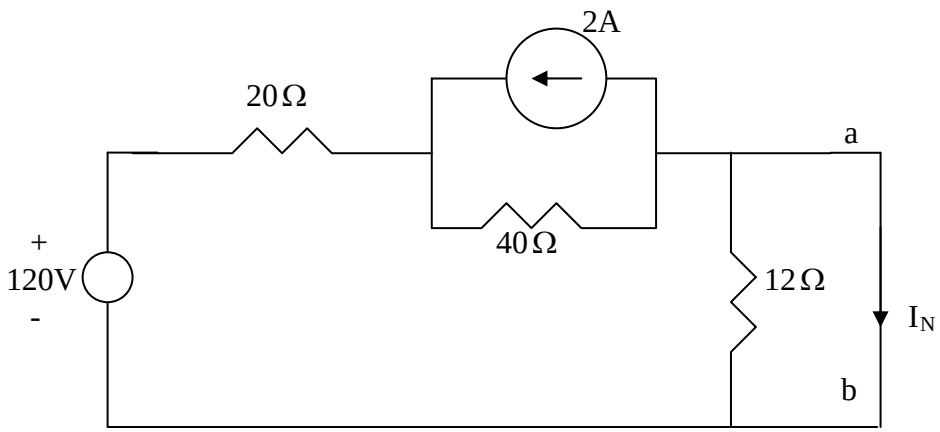

Applying source transformation to the current source yields the circuit below.

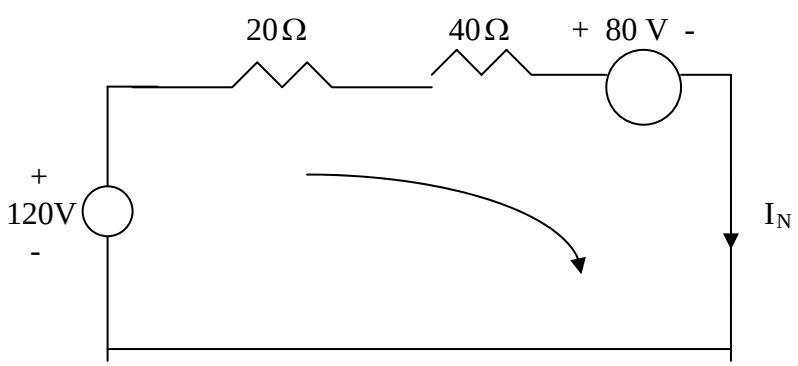

Applying KVL to the loop yields

$-120 + 80 + 60I_N = 0 \quad \longrightarrow \quad I_N = 40/60 = \mathbf{666.7\ mA}$.

www.konkur.in

Chapter 4, Solution 38

We find Thevenin equivalent at the terminals of the 10-ohm resistor. For R_{Th}, consider the circuit below.

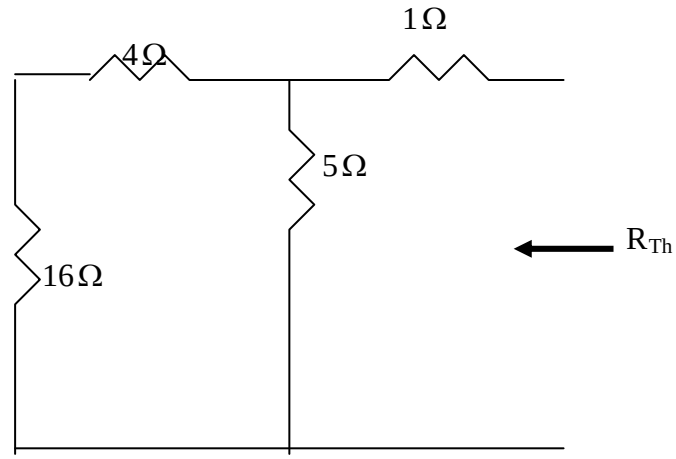

$$R_{Th} = 1 + 5//(4+16) = 1 + 4 = 5\Omega$$

For V_{Th}, consider the circuit below.

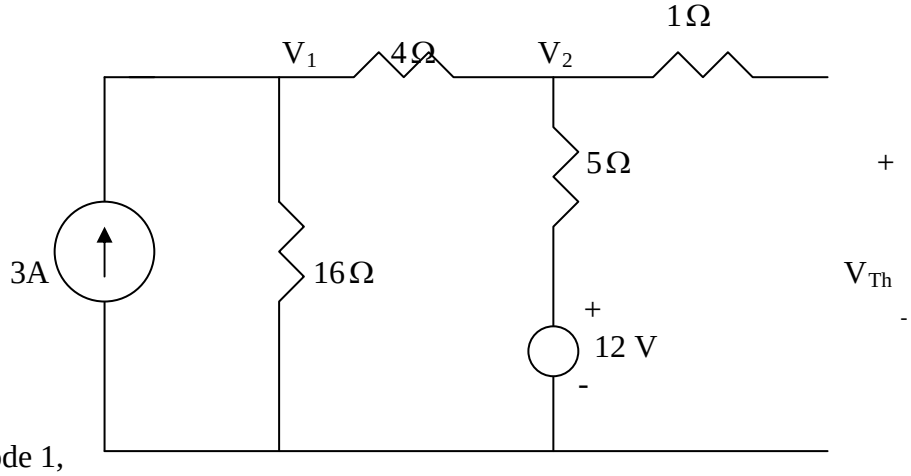

At node 1,

$$3 = \frac{V_1}{16} + \frac{V_1 - V_2}{4} \quad \longrightarrow \quad 48 = 5V_1 - 4V_2 \qquad (1)$$

At node 2,

$$\frac{V_1 - V_2}{4} + \frac{12 - V_2}{5} = 0 \quad \longrightarrow \quad 48 = -5V_1 + 9V_2 \qquad (2)$$

Solving (1) and (2) leads to

$$V_{Th} = V_2 = 19.2$$

www.konkur.in

Thus, the given circuit can be replaced as shown below.

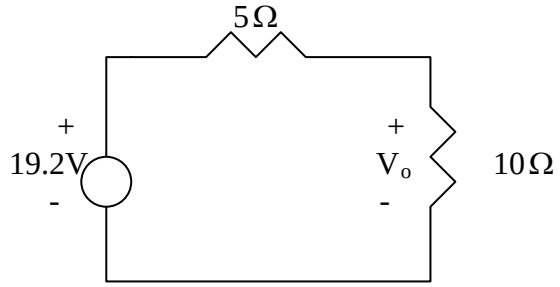

Using voltage division,

$$V_o = \frac{10}{10+5}(19.2) = 12.8 \text{ V}.$$

Chapter 4, Solution 39.

We obtain R_{Th} using the circuit below.

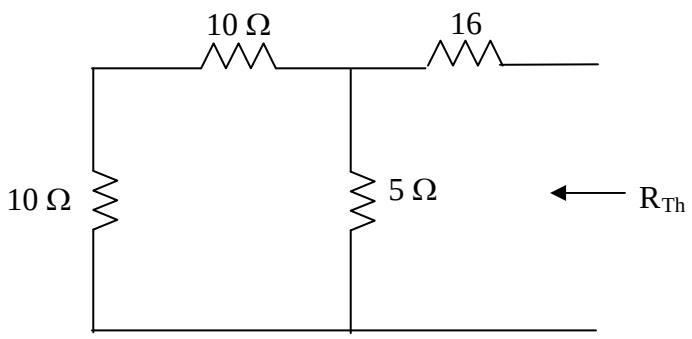

R_{Thev} = 16 + (20||5) = 16 + (20x5)/(20+5) = **20 Ω**

To find V_{Th}, we use the circuit below.

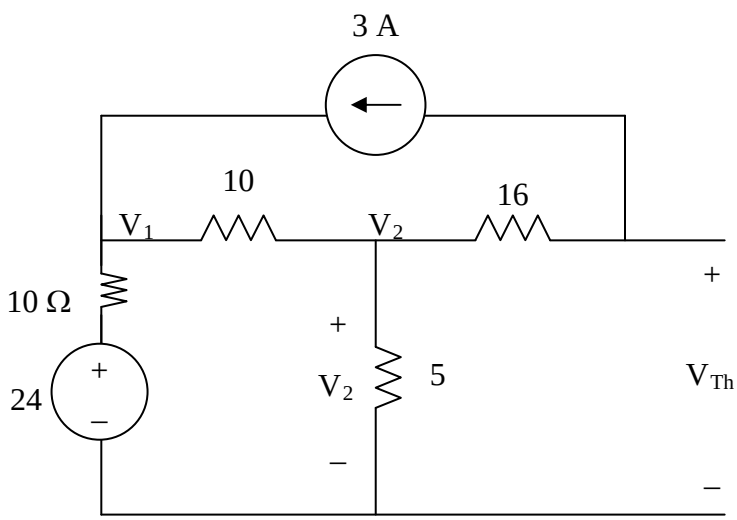

At node 1,

$$\frac{24 - V_1}{10} + 3 = \frac{V_1 - V_2}{10} \longrightarrow 54 = 2V_1 - V_2 \qquad (1)$$

At node 2,

$$\frac{V_1 - V_2}{10} = 3 + \frac{V_2}{5} \longrightarrow 60 = 2V_1 - 6V_2 \qquad (2)$$

www.konkur.in

Substracting (1) from (2) gives

$$6 = -5V_2 \text{ or } V_2 = -1.2 \text{ V}$$

But

$$-V_2 + 16x3 + V_{Thev} = 0 \text{ or } V_{Thev} = -(48 + 1.2) = \mathbf{-49.2\ V}$$

www.konkur.in

Chapter 4, Solution 40.

To obtain V_{Th}, we apply KVL to the loop.

$$-70 + (10 + 20)kI + 4V_o = 0$$

But $V_o = 10kI$

$$70 = 70kI \longrightarrow I = 1mA$$

$$-70 + 10kI + V_{Th} = 0 \longrightarrow V_{Th} = \underline{60\ \text{V}}$$

To find R_{Th}, we remove the 70-V source and apply a 1-V source at terminals a-b, as shown in the circuit below.

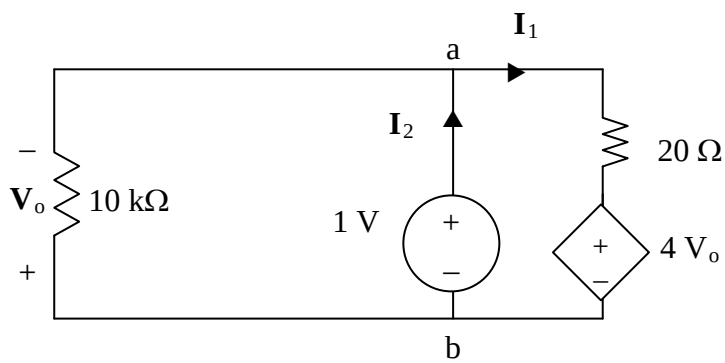

We notice that V_o = -1 V.

$$-1 + 20kI_1 + 4V_o = 0 \longrightarrow I_1 = 0.25\ \text{mA}$$

$$I_2 = I_1 + \frac{1V}{10k} = 0.35\ \text{mA}$$

$$R_{Th} = \frac{1V}{I_2} = \frac{1}{0.35}k\Omega = \underline{2.857\ \text{k}\Omega}$$

www.konkur.in

Chapter 4, Solution 41

To find R_{Th}, consider the circuit below

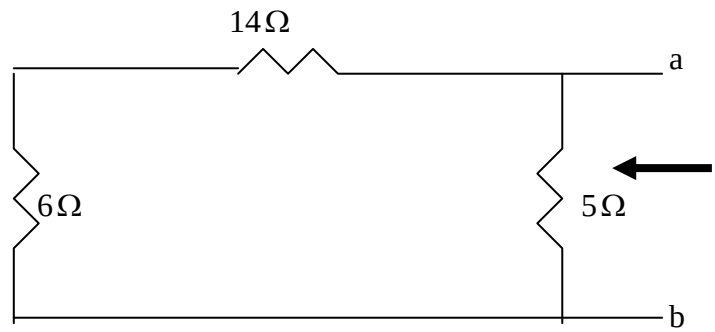

$$R_{Th} = 5//(14+6) = 4\Omega = R_N$$

Applying source transformation to the 1-A current source, we obtain the circuit below.

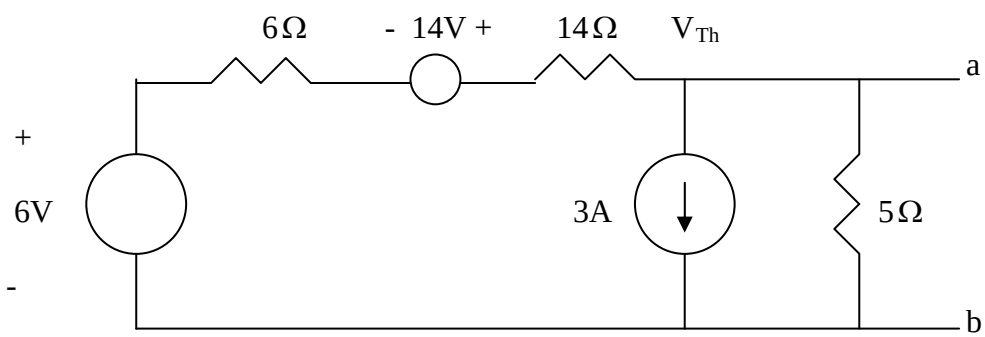

At node a,

$$\frac{14+6-V_{Th}}{6+14} = 3 + \frac{V_{Th}}{5} \quad \longrightarrow \quad V_{Th} = -8\text{ V}$$

$$I_N = \frac{V_{Th}}{R_{Th}} = (-8)/4 = -2\text{ A}$$

Thus,

$$\underline{\boldsymbol{R_{Th} = R_N = 4\Omega, \quad V_{Th} = -8\text{V}, \quad I_N = -2\text{ A}}}$$

www.konkur.in

Chapter 4, Solution 42.

To find R_{Th}, consider the circuit in Fig. (a).

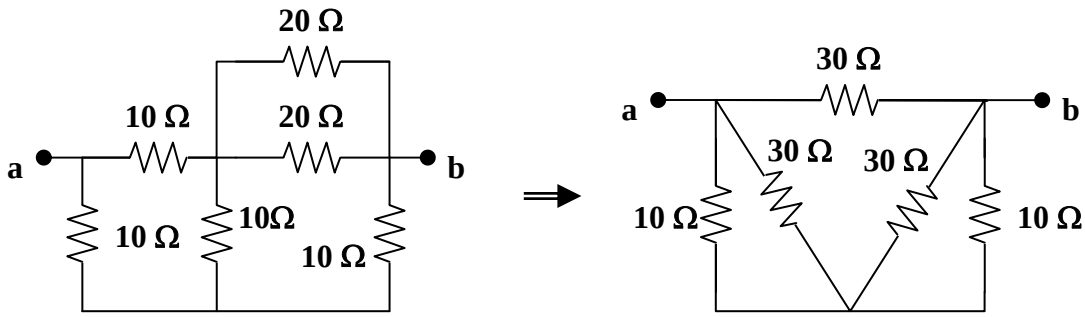

(a) **(b)**

20||20 = 10 ohms. Transform the wye sub-network to a delta as shown in Fig. (b).
10||30 = 7.5 ohms. $R_{Th} = R_{ab} = 30||(7.5 + 7.5)$ = **10 ohms**.

To find V_{Th}, we transform the 20-V (to a current source in parallel with the 20 Ω resistor and then back into a voltage source in series with the parallel combination of the two 20 Ω resistors) and the 5-A sources. We obtain the circuit shown in Fig. (c).

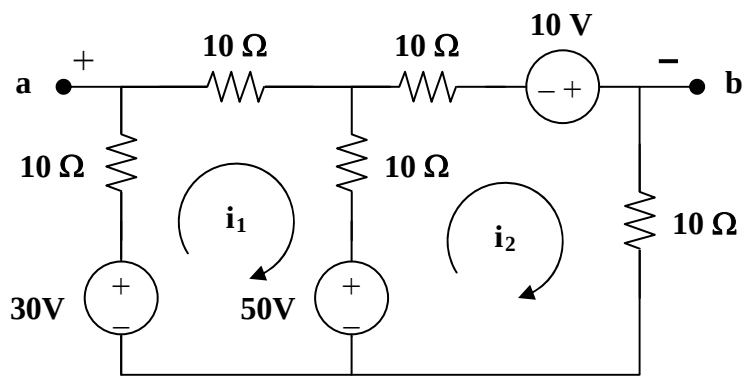

(c)

For loop 1, $-30 + 50 + 30i_1 - 10i_2 = 0$, or $-2 = 3i_1 - i_2$ (1)

For loop 2, $-50 - 10 + 30i_2 - 10i_1 = 0$, or $6 = -i_1 + 3i_2$ (2)

Solving (1) and (2), $i_1 = 0$, $i_2 = 2$ A

Applying KVL to the output loop, $-v_{ab} - 10i_1 + 30 - 10i_2 = 0$, $v_{ab} = 10$ V

$V_{Th} = v_{ab}$ = **10 volts**

www.konkur.in

Chapter 4, Solution 43.

To find R_{Th}, consider the circuit in Fig. (a).

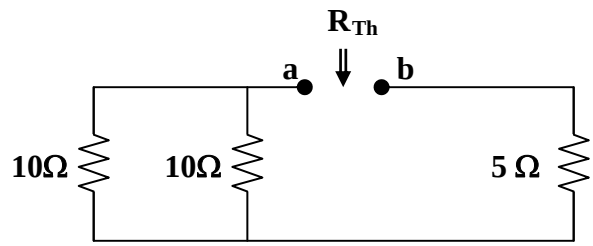

(a)

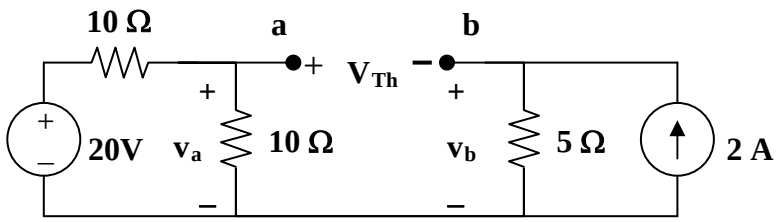

(b)

$$R_{Th} = 10||10 + 5 = \textbf{10 ohms}$$

To find V_{Th}, consider the circuit in Fig. (b).

$$v_b = 2x5 = 10 \text{ V}, \quad v_a = 20/2 = 10 \text{ V}$$

But, $-v_a + V_{Th} + v_b = 0$, or $V_{Th} = v_a - v_b =$ **0 volts**

www.konkur.in

Chapter 4, Solution 44.

(a) For R_{Th}, consider the circuit in Fig. (a).

$$R_{Th} = 1 + 4||(3 + 2 + 5) = \mathbf{3.857\ ohms}$$

For V_{Th}, consider the circuit in Fig. (b). Applying KVL gives,

$$10 - 24 + i(3 + 4 + 5 + 2), \text{ or } i = 1$$

$$V_{Th} = 4i = \mathbf{4\ V}$$

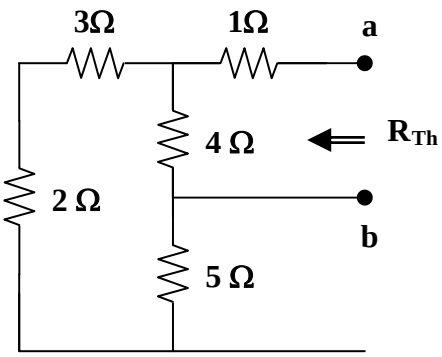

(a)

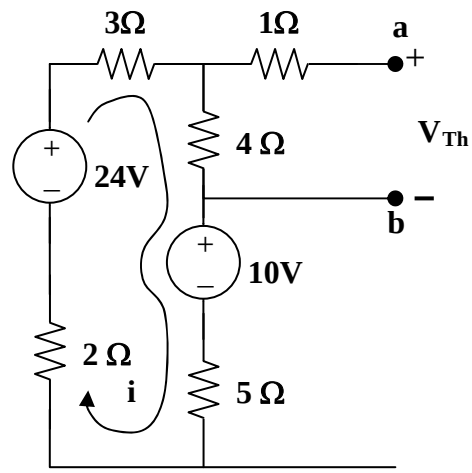

(b)

(b) For R_{Th}, consider the circuit in Fig. (c).

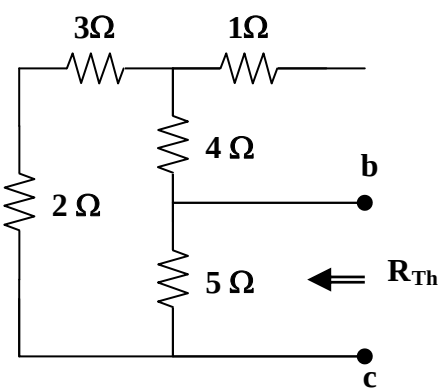

(c)

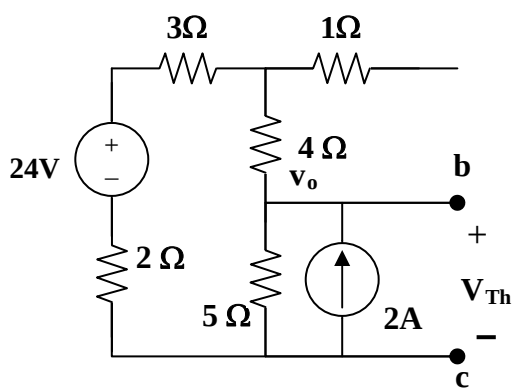

(d)

$$R_{Th} = 5||(2 + 3 + 4) = \mathbf{3.214\ ohms}$$

www.konkur.in

To get V_{Th}, consider the circuit in Fig. (d). At the node, KCL gives,

$$[(24 - vo)/9] + 2 = vo/5, \text{ or } vo = 15$$

$$V_{Th} = vo = \mathbf{15\ V}$$

www.konkur.in

Chapter 4, Solution 45.

For R_N, consider the circuit in Fig. (a).

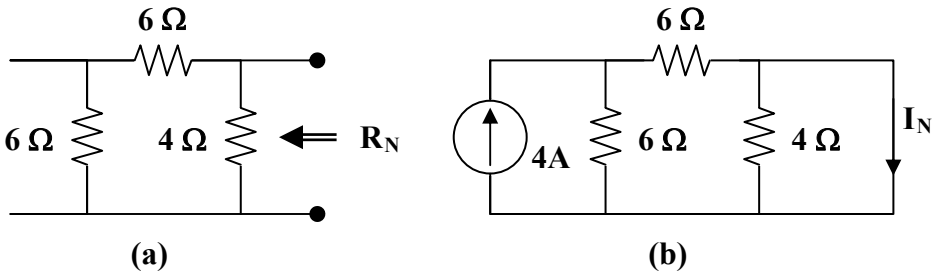

$$R_N = (6 + 6)||4 = \mathbf{3\ \Omega}$$

For I_N, consider the circuit in Fig. (b). The 4-ohm resistor is shorted so that 4-A current is equally divided between the two 6-ohm resistors. Hence,

$$I_N = 4/2 = \mathbf{2\ A}$$

www.konkur.in

Chapter 4, Solution 46.

Using Fig. 4.113, design a problem to help other students better understand Norton equivalent circuits.

Although there are many ways to work this problem, this is an example based on the same kind of problem asked in the third edition.

Problem

Find the Norton equivalent at terminals a-b of the circuit in Fig. 4.113.

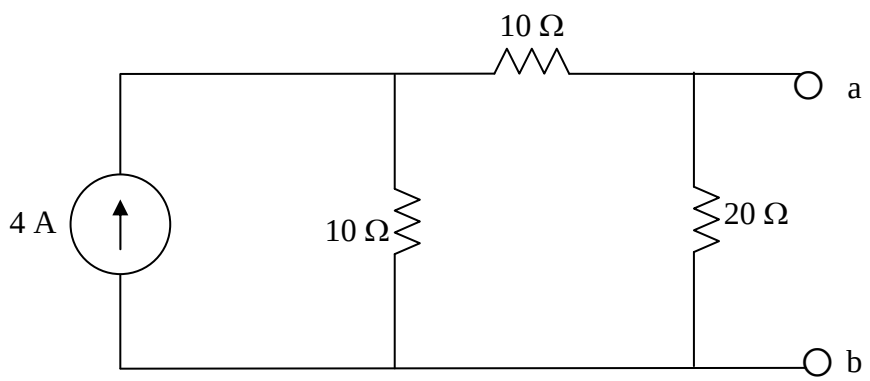

Figure 4.113 For Prob. 4.46.

Solution

R_N is found using the circuit below.

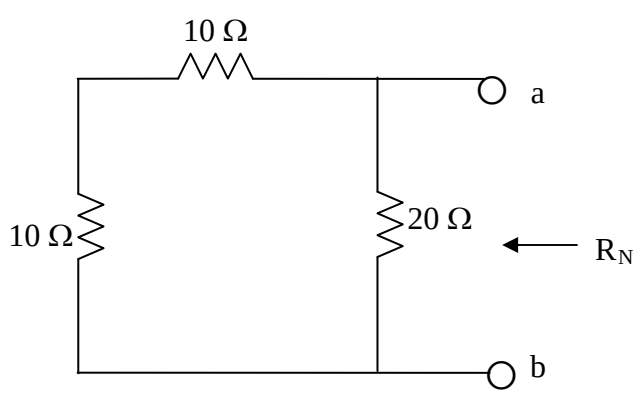

www.konkur.in

$R_N = 20//(10+10) = 10\ \Omega$
To find I_N, consider the circuit below.

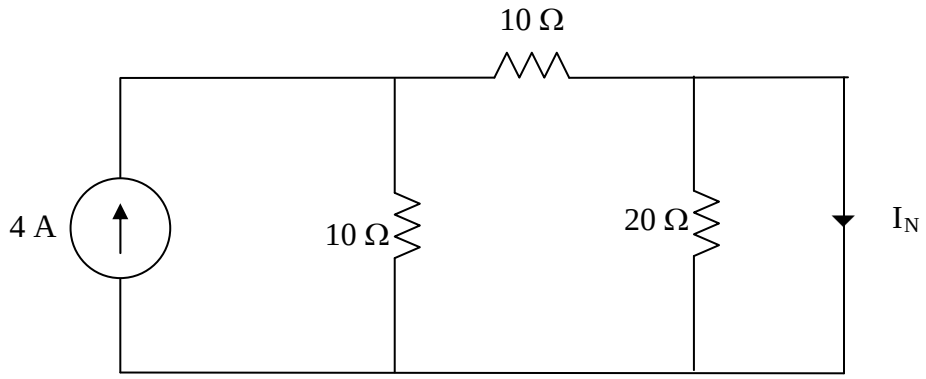

The 20-Ω resistor is short-circuited and can be ignored.

$$I_N = ½ \times 4 = \mathbf{2\ A}$$

www.konkur.in

Chapter 4, Solution 47

Since $V_{Th} = V_{ab} = V_x$, we apply KCL at the node a and obtain

$$\frac{30 - V_{Th}}{12} = \frac{V_{Th}}{60} + 2V_{Th} \longrightarrow V_{Th} = 150/126 = 1.1905 \text{ V}$$

To find R_{Th}, consider the circuit below.

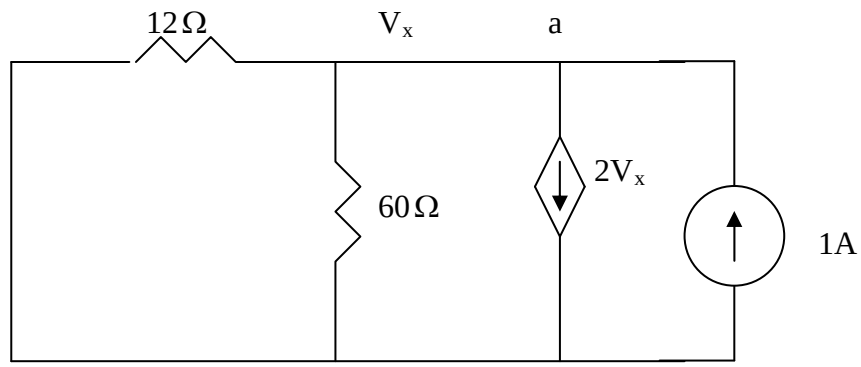

At node a, KCL gives

$$1 = 2V_x + \frac{V_x}{60} + \frac{V_x}{12} \longrightarrow V_x = 60/126 = 0.4762$$

$$R_{Th} = \frac{V_x}{1} = 0.4762\Omega, \quad I_N = \frac{V_{Th}}{R_{Th}} = 1.19/0.4762 = 2.5$$

Thus,

V_{Thev} = **1.1905 V**, R_{eq} = **476.2 mΩ**, and I_N = **2.5 A**.

www.konkur.in

Chapter 4, Solution 48.

To get R_{Th}, consider the circuit in Fig. (a).

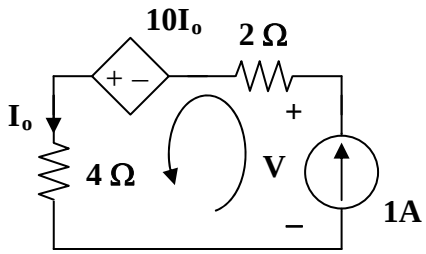

(a)

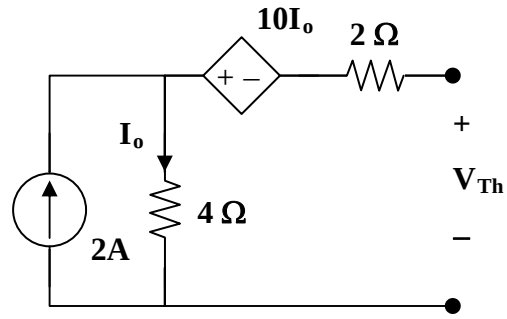

(b)

From Fig. (a), $I_o = 1$, $6 - 10 - V = 0$, or $V = -4$

$$R_{eq} = V/1 = \mathbf{-4\ ohms}$$

Note that the negative value of R_{eq} indicates that we have an active device in the circuit since we cannot have a negative resistance in a purely passive circuit.

To solve for I_N we first solve for V_{Th}, consider the circuit in Fig. (b),

$$I_o = 2,\ V_{Th} = -10I_o + 4I_o = -12\ V$$

$$I_N = V_{Th}/R_{Th} = \mathbf{3A}$$

www.konkur.in

Chapter 4, Solution 49.

$R_N = R_{Th} =$ **28 ohms**

To find I_N, consider the circuit below,

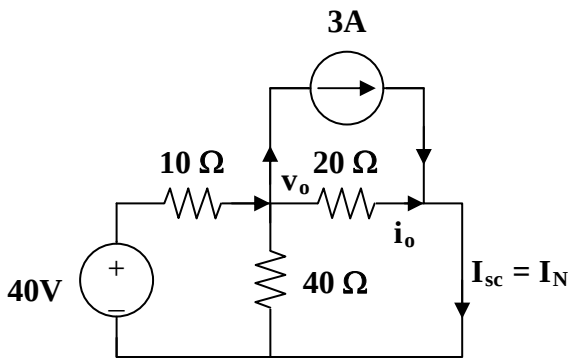

At the node, $(40 - v_o)/10 = 3 + (v_o/40) + (v_o/20)$, or $v_o = 40/7$

$i_o = v_o/20 = 2/7$, but $I_N = I_{sc} = i_o + 3 =$ **3.286 A**

www.konkur.in

Chapter 4, Solution 50.

From Fig. (a), $R_N = 6 + 4 =$ **10 ohms**

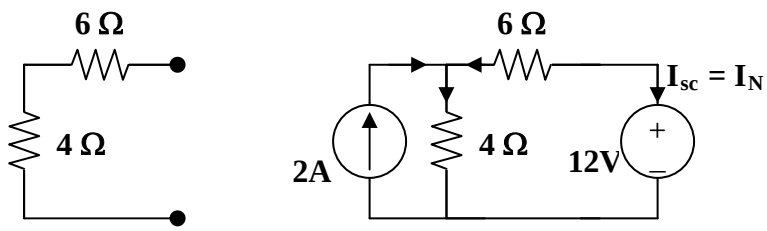

(a) **(b)**

From Fig. (b), $2 + (12 - v)/6 = v/4$, or $v = 9.6$ V

$-I_N = (12 - v)/6 = 0.4$, which leads to $I_N =$ **-0.4 A**

Combining the Norton equivalent with the right-hand side of the original circuit produces the circuit in Fig. (c).

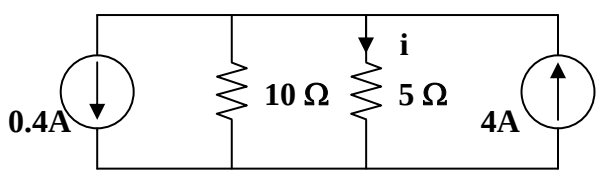

(c)

$i = [10/(10 + 5)]\,(4 - 0.4) =$ **2.4 A**

www.konkur.in

Chapter 4, Solution 51.

(a) From the circuit in Fig. (a),

$$R_N = 4||(2 + 6||3) = 4||4 = \mathbf{2\ ohms}$$

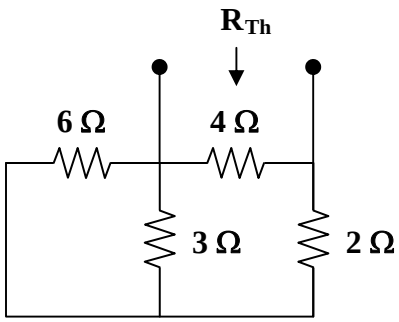

(a)

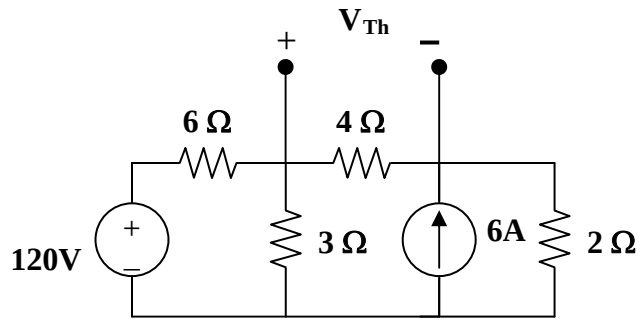

(b)

For I_N or V_{Th}, consider the circuit in Fig. (b). After some source transformations, the circuit becomes that shown in Fig. (c).

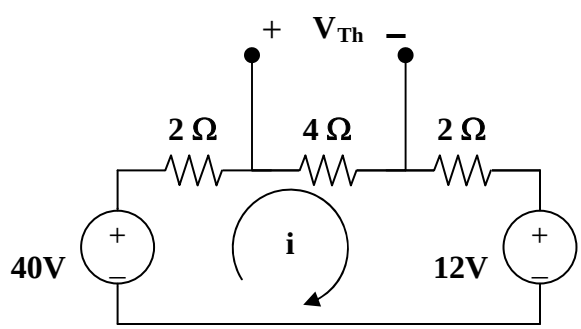

(c)

Applying KVL to the circuit in Fig. (c),

$$-40 + 8i + 12 = 0 \text{ which gives } i = 7/2$$

$$V_{Th} = 4i = 14 \text{ therefore } I_N = V_{Th}/R_N = 14/2 = \mathbf{7\ A}$$

www.konkur.in

(b) To get R_N, consider the circuit in Fig. (d).

$$R_N = 2||(4 + 6||3) = 2||6 = \mathbf{1.5\ ohms}$$

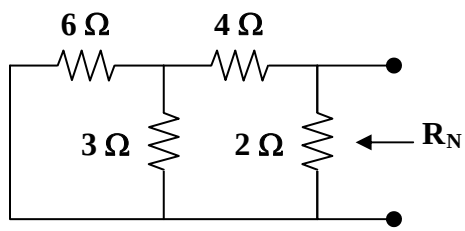

(d)

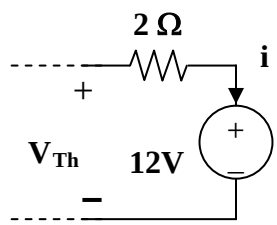

(e)

To get I_N, the circuit in Fig. (c) applies except that it needs slight modification as in Fig. (e).

$$i = 7/2,\ V_{Th} = 12 + 2i = 19,\ I_N = V_{Th}/R_N = 19/1.5 = \mathbf{12.667\ A}$$

www.konkur.in

Chapter 4, Solution 52.

For the transistor model in Fig. 4.118, obtain the Thevenin equivalent at terminals ***a-b***.

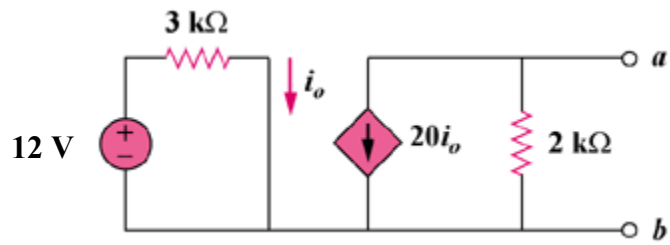

Figure 4.118
For Prob. 4.52.

Solution

Step 1. To find the Thevenin equivalent for this circuit we need to find v_{oc} and i_{sc}. Then $V_{Thev} = v_{oc}$ and $R_{eq} = v_{oc}/i_{sc}$.

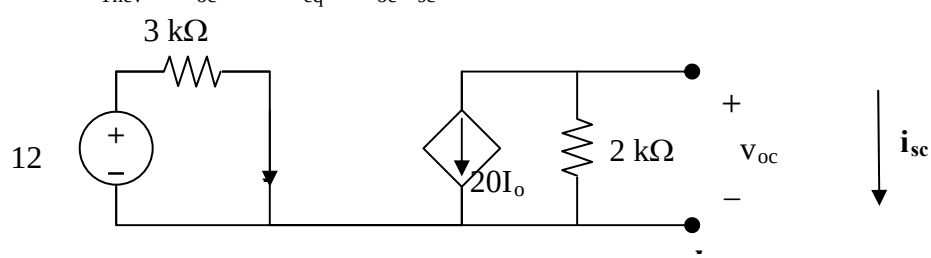

For v_{oc}, $I_o = (12–0)/3k = 4$ mA and $20I_o + (v_{oc}–0)/2k = 0$.

For i_{sc}, $i_{sc} = –20I_o$.

Step 2. $v_{oc} = –2k(20I_o) = –40x4 =$ **–160 volts** $= V_{Thev}$

$i_{sc} = –20x4x10^{-3} = –80$ mA or

$$R_{eq} = –160/(80x10^{-3}) = \mathbf{2\ k\Omega}.$$

www.konkur.in

Chapter 4, Solution 53.

To get R_{Th}, consider the circuit in Fig. (a).

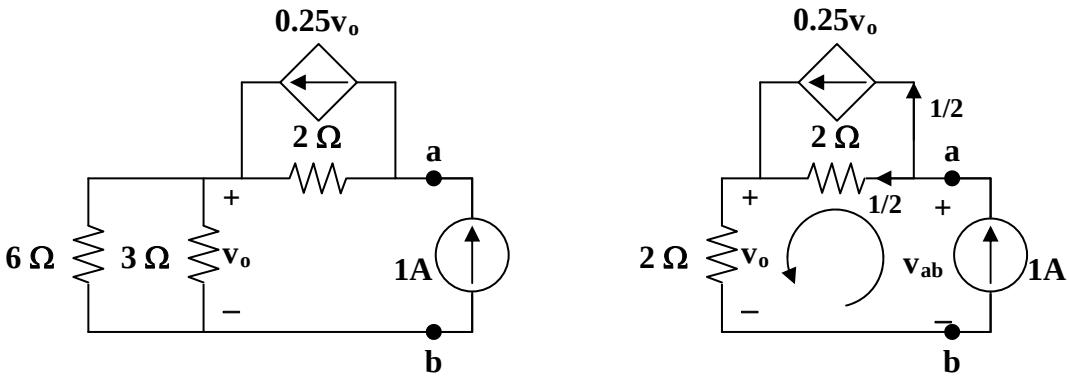

(a) **(b)**

From Fig. (b),

$$v_o = 2x1 = 2V, \ -v_{ab} + 2x(1/2) + v_o = 0$$

$$v_{ab} = 3V$$

$$R_N = v_{ab}/1 = \mathbf{3\ ohms}$$

To get I_N, consider the circuit in Fig. (c).

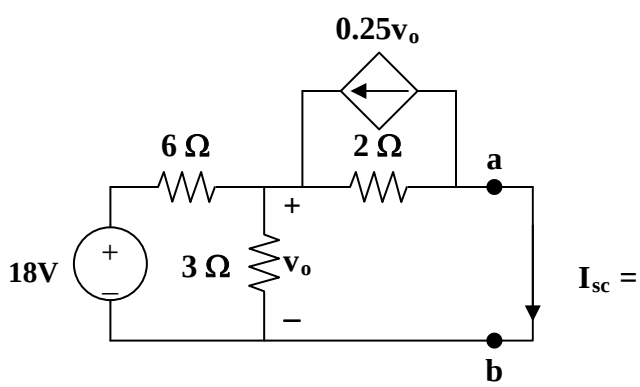

(c)

$$[(18 - v_o)/6] + 0.25v_o = (v_o/2) + (v_o/3) \ \text{ or } \ v_o = 4V$$

But, $(v_o/2) = 0.25v_o + I_N$, which leads to $I_N = \mathbf{1\ A}$

www.konkur.in

Chapter 4, Solution 54

To find $V_{Th} = V_x$, consider the left loop.

$$-3 + 1000i_o + 2V_x = 0 \quad \longrightarrow \quad 3 = 1000i_o + 2V_x \qquad (1)$$

For the right loop,

$$V_x = -50x40i_o = -2000i_o \qquad (2)$$

Combining (1) and (2),

$$3 = 1000i_o - 4000i_o = -3000i_o \quad \longrightarrow \quad i_o = -1\text{mA}$$

$$V_x = -2000i_o = 2 \quad \longrightarrow \quad \underline{V_{Th} = 2}$$

To find R_{Th}, insert a 1-V source at terminals a-b and remove the 3-V independent source, as shown below.

.

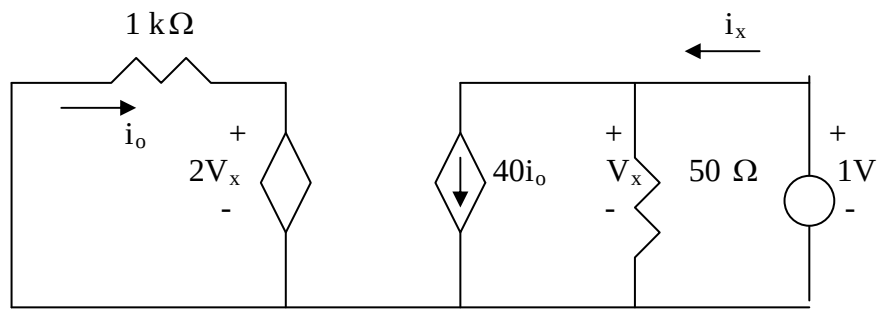

$$V_x = 1, \qquad i_o = -\frac{2V_x}{1000} = -2\text{mA}$$

$$i_x = 40i_o + \frac{V_x}{50} = -80\text{mA} + \frac{1}{50}\text{A} = \text{-}60\text{mA}$$

$$R_{Th} = \frac{1}{i_x} = -1/0.060 = \underline{-16.67\Omega}$$

www.konkur.in

Chapter 4, Solution 55.

To get R_N, apply a 1 mA source at the terminals a and b as shown in Fig. (a).

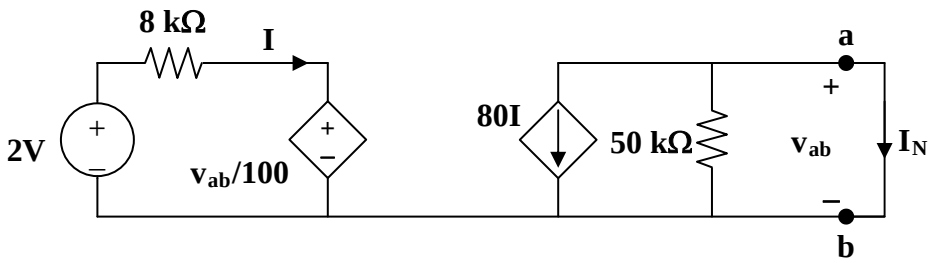

(b)

We assume all resistances are in k ohms, all currents in mA, and all voltages in volts. At node a,

$$(v_{ab}/50) + 80I = 1 \qquad (1)$$

Also,

$$-8I = (v_{ab}/1000), \text{ or } I = -v_{ab}/8000 \qquad (2)$$

From (1) and (2), $(v_{ab}/50) - (80v_{ab}/8000) = 1$, or $v_{ab} = 100$

$$R_N = v_{ab}/1 = \mathbf{100\ k\ ohms}$$

To get I_N, consider the circuit in Fig. (b).

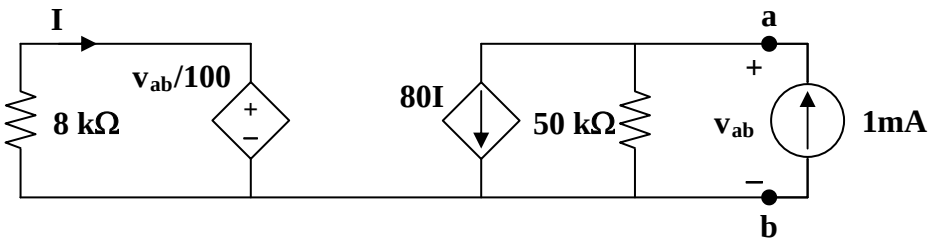

(a)

Since the 50-k ohm resistor is shorted,

$$I_N = -80I, \ v_{ab} = 0$$

Hence, $8i = 2$ which leads to $I = (1/4)$ mA

$$I_N = \mathbf{-20\ mA}$$

www.konkur.in

Chapter 4, Solution 56.

We remove the 1-kΩ resistor temporarily and find Norton equivalent across its terminals. R_{eq} is obtained from the circuit below.

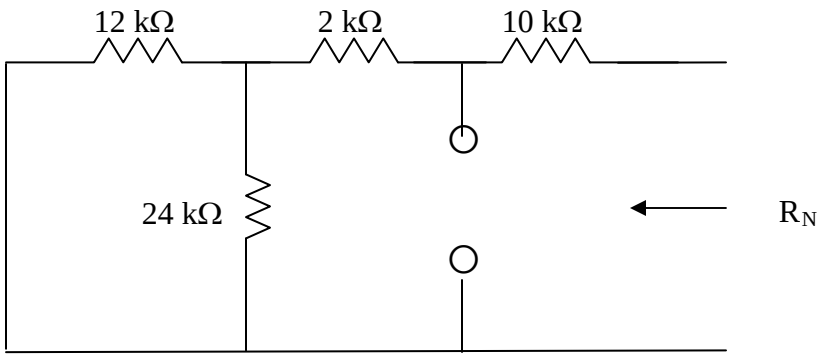

R_{eq} = 10 + 2 + (12//24) = 12+8 = 20 kΩ
I_N is obtained from the circuit below.

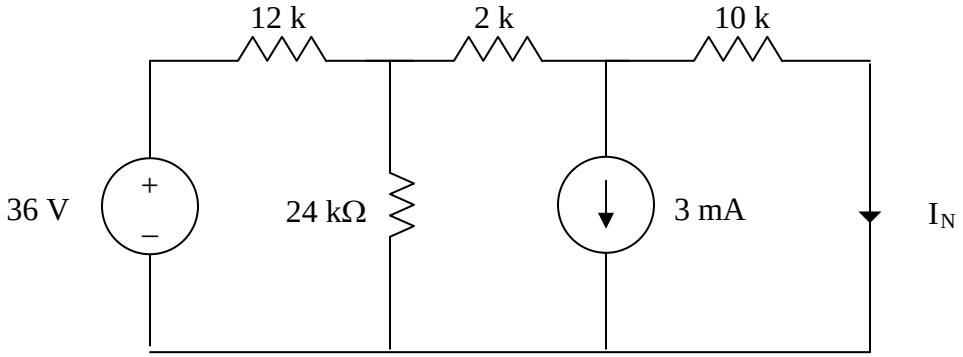

We can use superposition theorem to find I_N. Let $I_N = I_1 + I_2$, where I_1 and I_2 are due to 16-V and 3-mA sources respectively. We find I_1 using the circuit below.

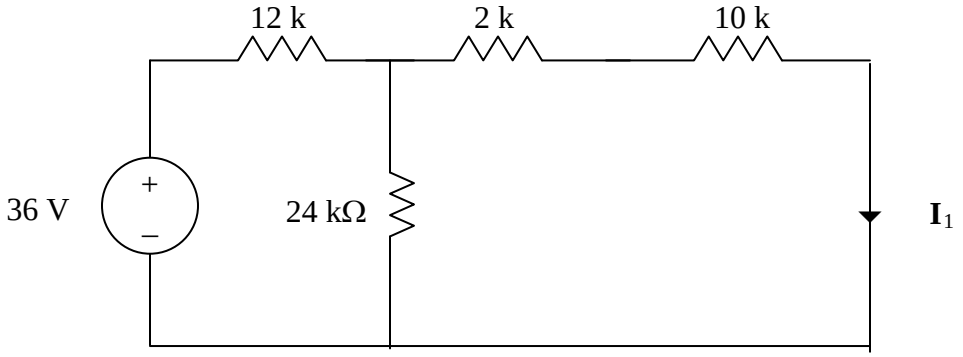

Using source transformation, we obtain the circuit below.

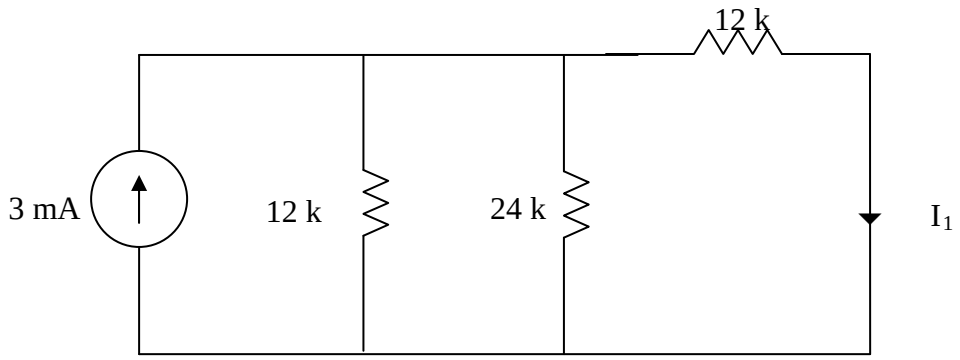

12//24 = 8 kΩ

$$I_1 = \frac{8}{8+12}(3mA) = 1.2 \text{ mA}$$

To find I_2, consider the circuit below.

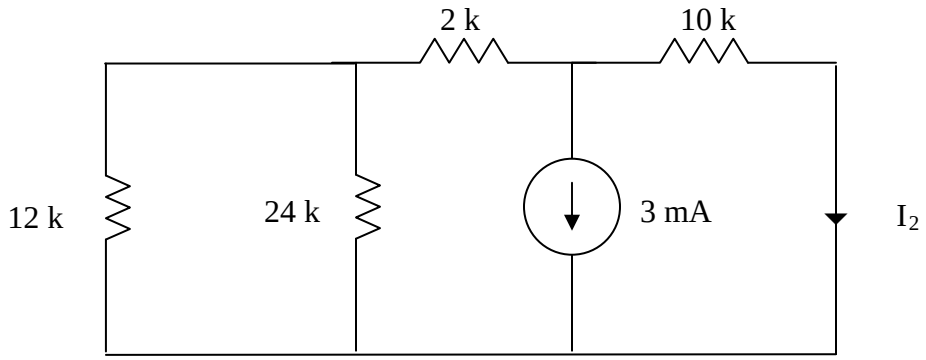

2k + 12k//24 k = 10 kΩ
I_2=0.5(-3mA) = -1.5 mA
I_N = 1.2 –1.5 = -0.3 mA

The Norton equivalent with the 1-kΩ resistor is shown below

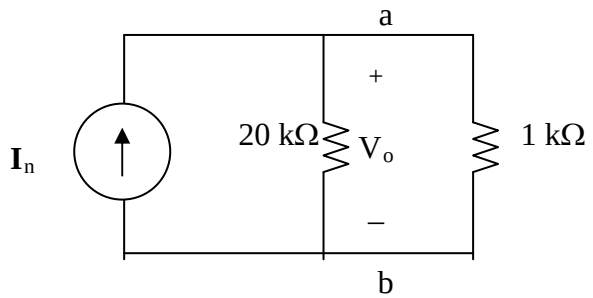

V_o = 1k(20/(20+1))(-0.3 mA) = **-285.7 mV**.

Chapter 4, Solution 57.

To find R_{Th}, remove the 50V source and insert a 1-V source at a – b, as shown in Fig. (a).

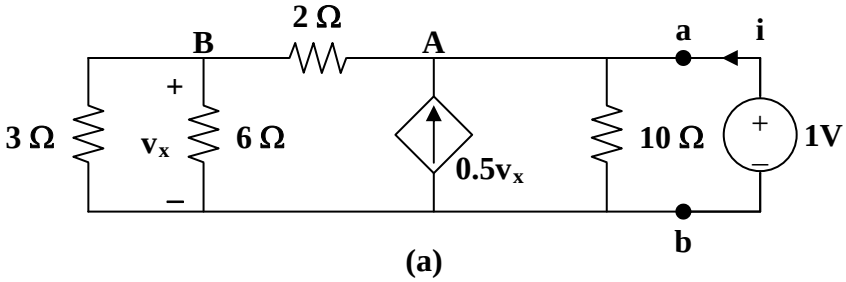

(a)

We apply nodal analysis. At node A,

$$i + 0.5v_x = (1/10) + (1 - v_x)/2, \text{ or } i + v_x = 0.6 \qquad (1)$$

At node B,

$$(1 - v_o)/2 = (v_x/3) + (v_x/6), \text{ and } v_x = 0.5 \qquad (2)$$

From (1) and (2), $i = 0.1$ and

$$R_{Th} = 1/i = \mathbf{10\ ohms}$$

To get V_{Th}, consider the circuit in Fig. (b).

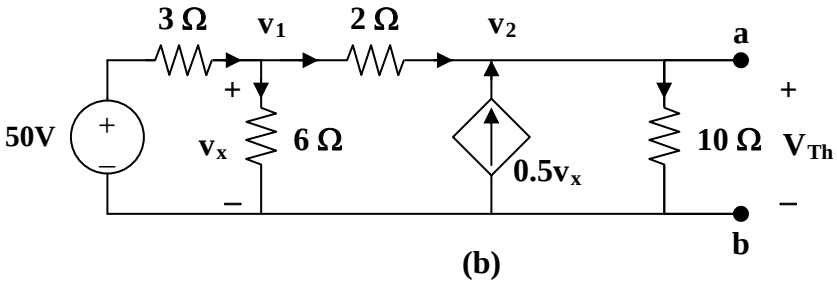

(b)

At node 1, $(50 - v_1)/3 = (v_1/6) + (v_1 - v_2)/2$, or $100 = 6v_1 - 3v_2$ (3)

At node 2, $0.5v_x + (v_1 - v_2)/2 = v_2/10$, $v_x = v_1$, and $v_1 = 0.6v_2$ (4)

From (3) and (4),

$$v_2 = V_{Th} = \mathbf{166.67\ V}$$

$$I_N = V_{Th}/R_{Th} = \mathbf{16.667\ A}$$

$$R_N = R_{Th} = \mathbf{10\ ohms}$$

www.konkur.in

Chapter 4, Solution 58.

This problem does not have a solution as it was originally stated. The reason for this is that the load resistor is in series with a current source which means that the only equivalent circuit that will work will be a Norton circuit where the value of R_N = **infinity**. I_N can be found by solving for I_{sc}.

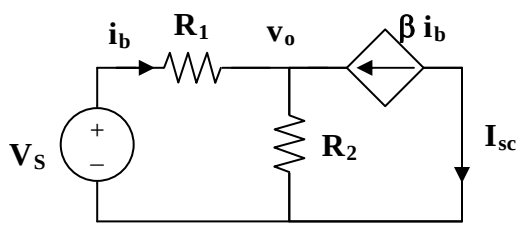

Writing the node equation at node vo,

$$i_b + \beta i_b = v_o/R_2 = (1 + \beta)i_b$$

But $$i_b = (V_s - v_o)/R_1$$

$$v_o = V_s - i_b R_1$$

$$V_s - i_b R_1 = (1 + \beta)R_2 i_b, \text{ or } i_b = V_s/(R_1 + (1 + \beta)R_2)$$

$$I_{sc} = I_N = -\beta i_b = \mathbf{-\beta V_s/(R_1 + (1 + \beta)R_2)}$$

www.konkur.in

Chapter 4, Solution 59.

R_{Th} = (10 + 20)||(50 + 40) 30||90 = **22.5 ohms**

To find V_{Th}, consider the circuit below.

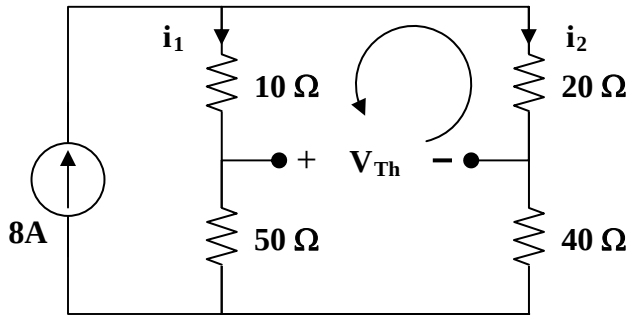

$i_1 = i_2 = 8/2 = 4$, $10i_1 + V_{Th} - 20i_2 = 0$, or $V_{Th} = 20i_2 - 10i_1 = 10i_1 = 10x4$

V_{Th} = **40V**, and $I_N = V_{Th}/R_{Th} = 40/22.5$ = **1.7778 A**

www.konkur.in

Chapter 4, Solution 60.

The circuit can be reduced by source transformations.

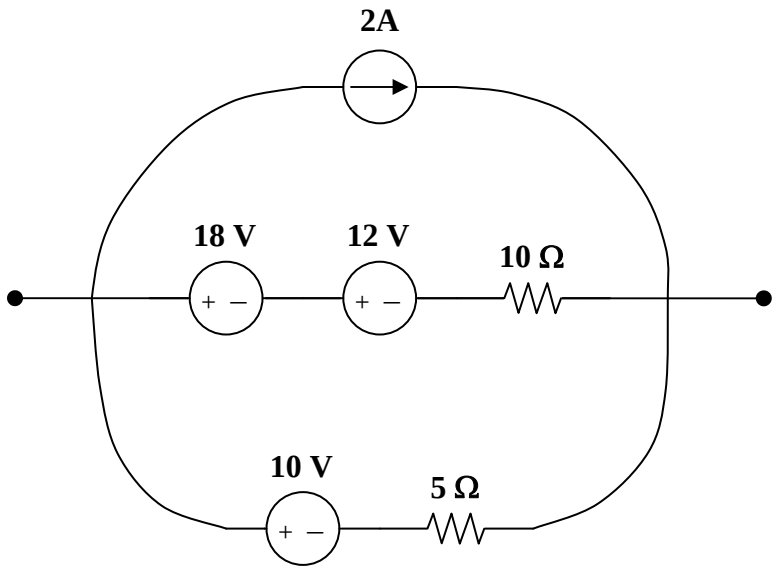

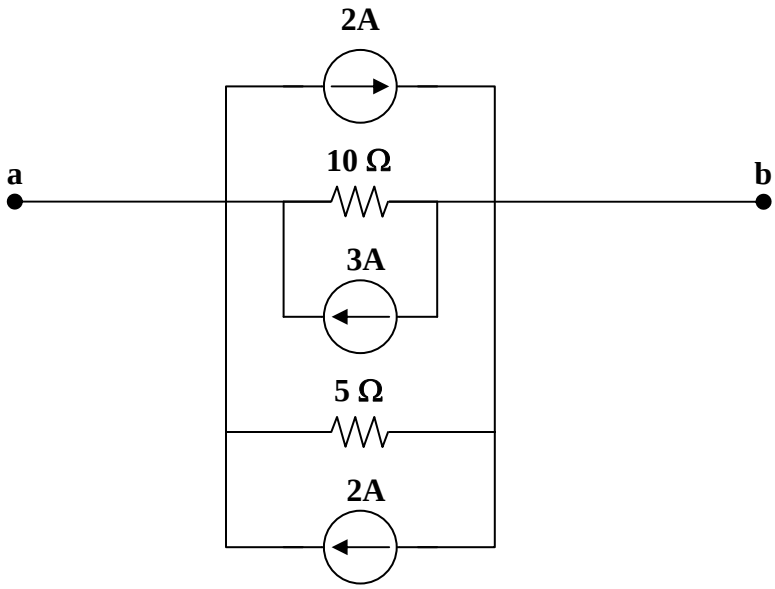

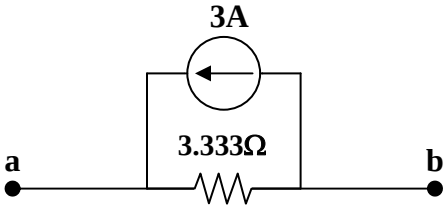

Norton Equivalent Circuit

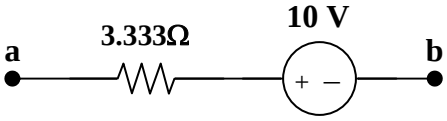

Thevenin Equivalent Circuit

www.konkur.in

Chapter 4, Solution 61.

To find R_{Th}, consider the circuit in Fig. (a).

Let $R = 2||18 = 1.8$ ohms, $R_{Th} = 2R||R = (2/3)R =$ **1.2 ohms**.

To get V_{Th}, we apply mesh analysis to the circuit in Fig. (d).

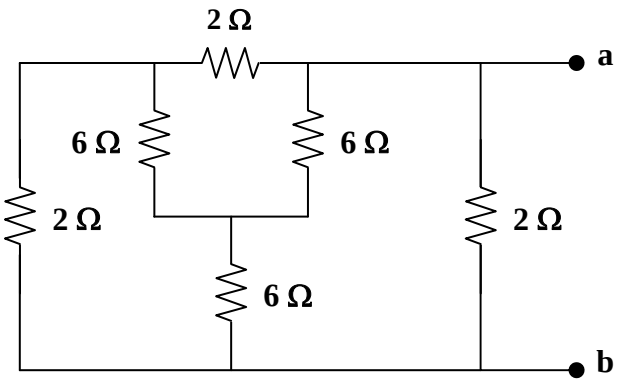

(a)

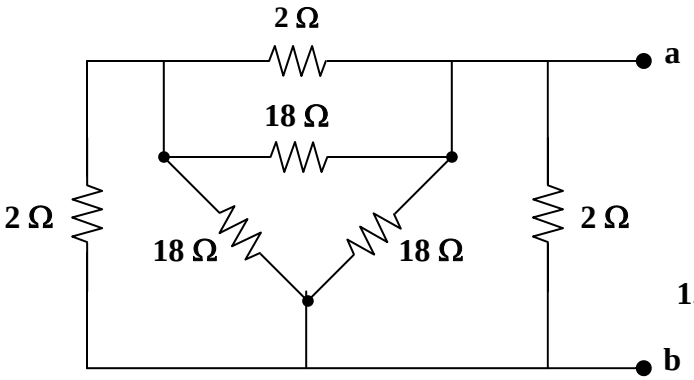

(b)

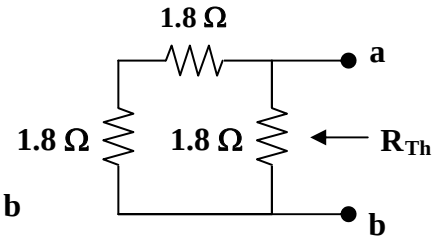

(c)

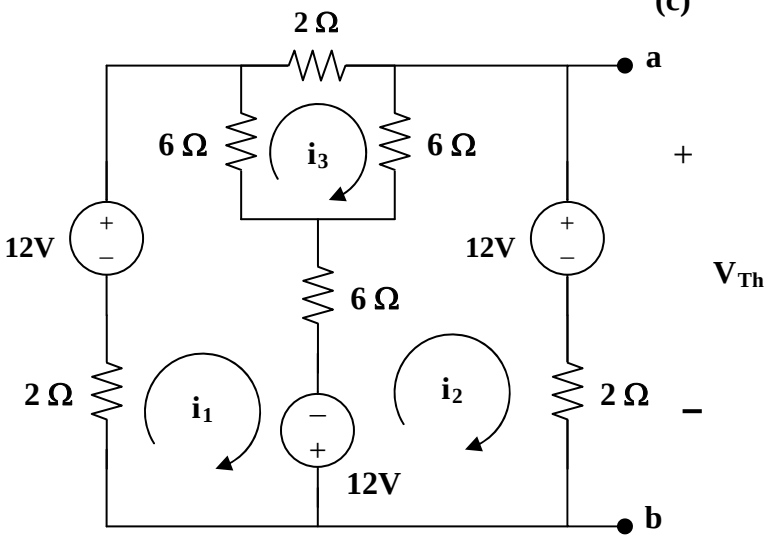

(d)

www.konkur.in

$-12 - 12 + 14i_1 - 6i_2 - 6i_3 = 0$, and $7\,i_1 - 3\,i_2 - 3i_3 = 12$ (1)

$12 + 12 + 14\,i_2 - 6\,i_1 - 6\,i_3 = 0$, and $-3\,i_1 + 7\,i_2 - 3\,i_3 = -12$ (2)

$14\,i_3 - 6\,i_1 - 6\,i_2 = 0$, and $-3\,i_1 - 3\,i_2 + 7\,i_3 = 0$ (3)

This leads to the following matrix form for (1), (2) and (3),

$$\begin{bmatrix} 7 & -3 & -3 \\ -3 & 7 & -3 \\ -3 & -3 & 7 \end{bmatrix}\begin{bmatrix} i_1 \\ i_2 \\ i_3 \end{bmatrix} = \begin{bmatrix} 12 \\ -12 \\ 0 \end{bmatrix}$$

$$\Delta = \begin{vmatrix} 7 & -3 & -3 \\ -3 & 7 & -3 \\ -3 & -3 & 7 \end{vmatrix} = 100, \qquad \Delta_2 = \begin{vmatrix} 7 & 12 & -3 \\ -3 & -12 & -3 \\ -3 & 0 & 7 \end{vmatrix} = -120$$

$$i_2 = \Delta/\Delta_2 = -120/100 = -1.2 \text{ A}$$

$$V_{Th} = 12 + 2i_2 = \mathbf{9.6\ V}, \text{ and } I_N = V_{Th}/R_{Th} = \mathbf{8\ A}$$

www.konkur.in

Chapter 4, Solution 62.

Since there are no independent sources, $V_{Th} = 0$ V

To obtain R_{Th}, consider the circuit below.

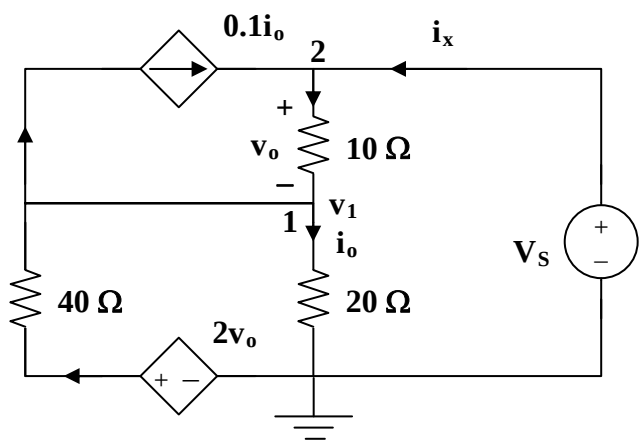

At node 2,

$$i_x + 0.1i_o = (1 - v_1)/10, \text{ or } 10i_x + i_o = 1 - v_1 \qquad (1)$$

At node 1,

$$(v_1/20) + 0.1i_o = [(2v_o - v_1)/40] + [(1 - v_1)/10] \qquad (2)$$

But $i_o = (v_1/20)$ and $v_o = 1 - v_1$, then (2) becomes,

$$1.1v_1/20 = [(2 - 3v_1)/40] + [(1 - v_1)/10]$$

$$2.2v_1 = 2 - 3v_1 + 4 - 4v_1 = 6 - 7v_1$$

or

$$v_1 = 6/9.2 \qquad (3)$$

From (1) and (3),

$$10i_x + v_1/20 = 1 - v_1$$

$$10i_x = 1 - v_1 - v_1/20 = 1 - (21/20)v_1 = 1 - (21/20)(6/9.2)$$

$$i_x = 31.52 \text{ mA}, \; R_{Th} = 1/i_x = \mathbf{31.73 \text{ ohms.}}$$

www.konkur.in

Chapter 4, Solution 63.

Because there are no independent sources, $I_N = I_{sc} =$ **0 A**

R_N can be found using the circuit below.

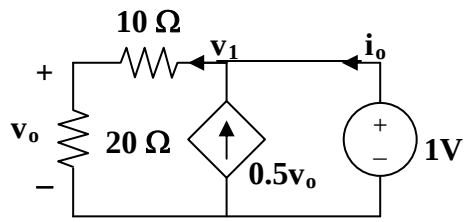

Applying KCL at node 1, $v_1 = 1$, and $v_o = (20/30)v_1 = 2/3$

$i_o = (v_1/30) - 0.5v_o = (1/30) - 0.5x2/3 = 0.03333 - 0.33333 = -0.3$ A.

Hence,

$$R_N = 1/(-0.3) = \mathbf{-3.333\ ohms}$$

www.konkur.in

Chapter 4, Solution 64.

With no independent sources, V_{Th} = **0 V**. To obtain R_{Th}, consider the circuit shown below.

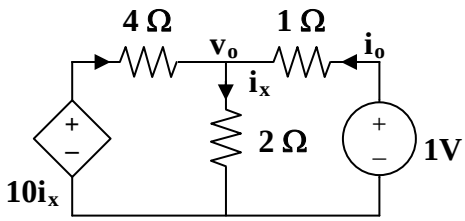

$$i_x = [(1 - v_o)/1] + [(10i_x - v_o)/4], \text{ or } 5v_o = 4 + 6i_x \qquad (1)$$

But $i_x = v_o/2$. Hence,

$$5v_o = 4 + 3v_o, \text{ or } v_o = 2, \; i_o = (1 - v_o)/1 = -1$$

$$\text{Thus, } R_{Th} = 1/i_o = \mathbf{-1\ ohm}$$

www.konkur.in

Chapter 4, Solution 65

At the terminals of the unknown resistance, we replace the circuit by its Thevenin equivalent.

$R_{eq} = 2 + (4 \| 12) = 2 + 3 = 5\Omega,$ $\qquad V_{Th} = \dfrac{12}{12+4}(32) = 24\text{ V}$

Thus, the circuit can be replaced by that shown below.

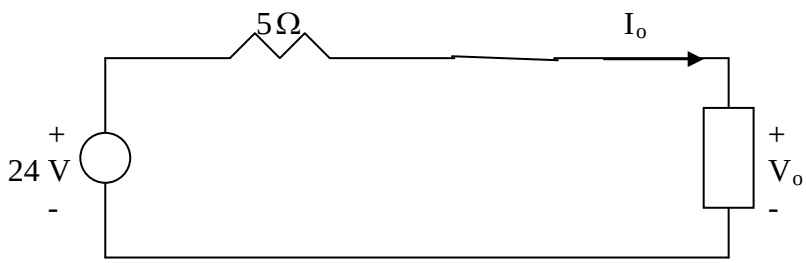

Applying KVL to the loop,

$$-24 + 5I_o + V_o = 0 \qquad \longrightarrow \qquad \mathbf{V_o = 24 - 5I_o.}$$

www.konkur.in

Chapter 4, Solution 66.

We first find the Thevenin equivalent at terminals a and b. We find R_{Th} using the circuit in Fig. (a).

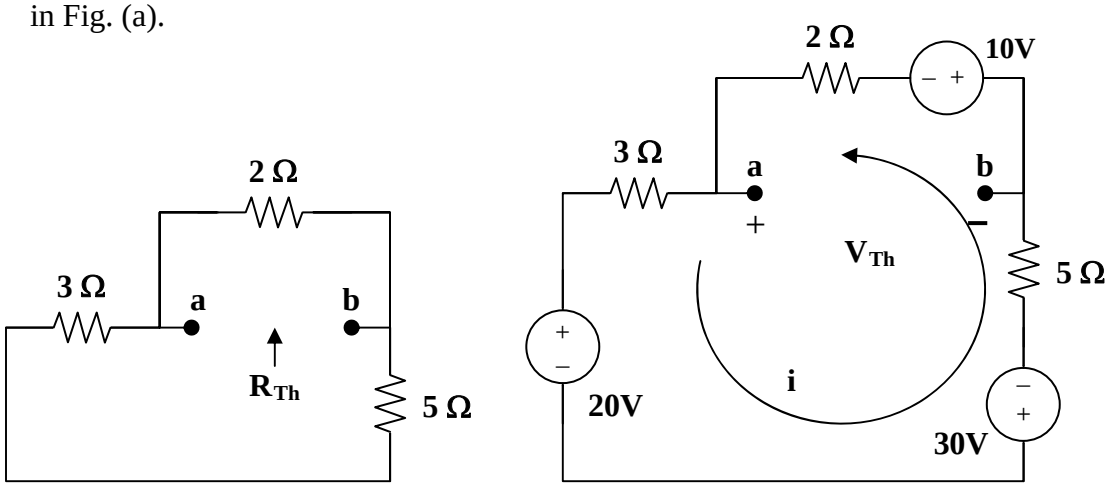

(a) **(b)**

$$R_{Th} = 2||(3 + 5) = 2||8 = \mathbf{1.6\ ohms}$$

By performing source transformation on the given circuit, we obatin the circuit in (b). We now use this to find V_{Th}.

$$10i + 30 + 20 + 10 = 0, \text{ or } i = -6$$

$$V_{Th} + 10 + 2i = 0, \text{ or } V_{Th} = 2\text{ V}$$

$$p = V_{Th}^2/(4R_{Th}) = (2)^2/[4(1.6)] = \mathbf{625\ m\ watts}$$

www.konkur.in

Chapter 4, Solution 67.

We first find the Thevenin equivalent. We find R_{Th} using the circuit below.

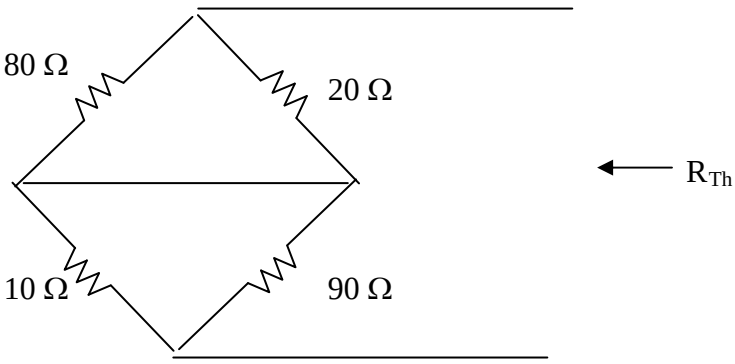

$$R_{Th} = 20//80 + 90//10 = 16 + 9 = 25\ \Omega$$

We find V_{Th} using the circuit below. We apply mesh analysis.

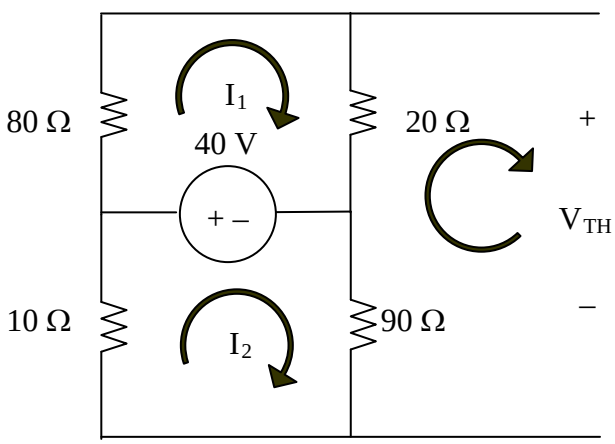

$$(80+20)i_1 - 40 = 0 \longrightarrow i_1 = 0.4$$
$$(10+90)i_2 + 40 = 0 \longrightarrow i_2 = -0.4$$
$$-90i_2 - 20i_1 + V_{Th} = 0 \longrightarrow V_{Th} = -28\ \text{V}$$

(a) $R = R_{Th} = \mathbf{25\ \Omega}$

(b) $P_{max} = \dfrac{V_{Th}^2}{4R_{Th}} = \dfrac{(28)^2}{100} = \underline{7.84\ \text{W}}$

www.konkur.in

Chapter 4, Solution 68.

This is a challenging problem in that the load is already specified. This now becomes a "minimize losses" style problem. When a load is specified and internal losses can be adjusted, then the objective becomes, reduce R_{Thev} as much as possible, which will result in maximum power transfer to the load.

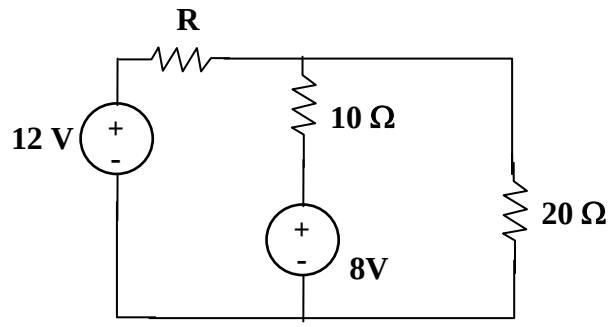

Removing the 10 ohm resistor and solving for the Thevenin Circuit results in:

$$R_{Th} = (Rx20/(R+20)) \text{ and a } V_{oc} = V_{Th} = 12x(20/(R+20)) + (-8)$$

As R goes to zero, R_{Th} goes to zero and V_{Th} goes to 4 volts, which produces the maximum power delivered to the 10-ohm resistor.

$$P = vi = v^2/R = 4x4/10 = 1.6 \text{ watts}$$

Notice that if R = 20 ohms which gives an R_{Th} = 10 ohms, then V_{Th} becomes -2 volts and the power delivered to the load becomes 0.1 watts, much less that the 1.6 watts.

It is also interesting to note that the internal losses for the first case are $12^2/20 = 7.2$ watts and for the second case are = to 12 watts. This is a significant difference.

www.konkur.in

Chapter 4, Solution 69.

We need the Thevenin equivalent across the resistor R. To find R_{Th}, consider the circuit below.

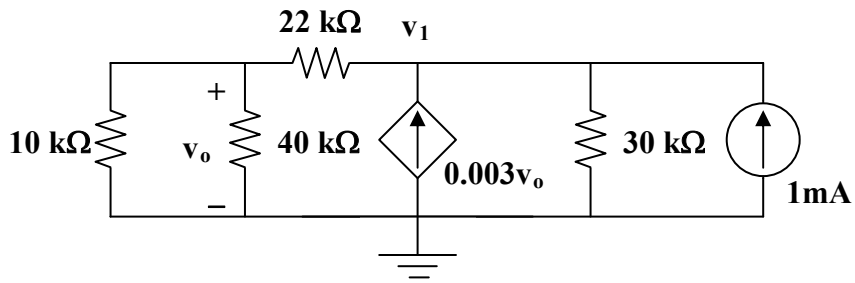

Assume that all resistances are in k ohms and all currents are in mA.

$$10||40 = 8, \text{ and } 8 + 22 = 30$$

$$1 + 3v_o = (v_1/30) + (v_1/30) = (v_1/15)$$

$$15 + 45v_o = v_1$$

But $v_o = (8/30)v_1$, hence,

$$15 + 45x(8v_1/30)\ v_1, \text{ which leads to } v_1 = 1.3636$$

$$R_{Th} = v_1/1 = -1.3636 \text{ k ohms}$$

R_{Th} being negative indicates an active circuit and if you now make R equal to 1.3636 k ohms, then the active circuit will actually try to supply infinite power to the resistor. The correct answer is therefore:

$$p_R = \left(\frac{V_{Th}}{-1363.6+1363.6}\right)^2 1363.6 = \left(\frac{V_{Th}}{0}\right)^2 1363.6 = \infty$$

It may still be instructive to find V_{Th}. Consider the circuit below.

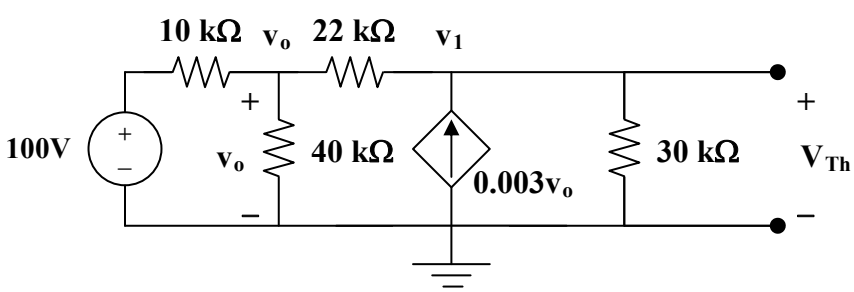

$$(100 - v_o)/10 = (v_o/40) + (v_o - v_1)/22 \qquad (1)$$

www.konkur.in

$$[(v_o - v_1)/22] + 3v_o = (v_1/30) \qquad (2)$$

Solving (1) and (2),

$$v_1 = V_{Th} = -243.6 \text{ volts}$$

www.konkur.in

Chapter 4, Solution 70

We find the Thevenin equivalent across the 10-ohm resistor. To find V_{Th}, consider the circuit below.

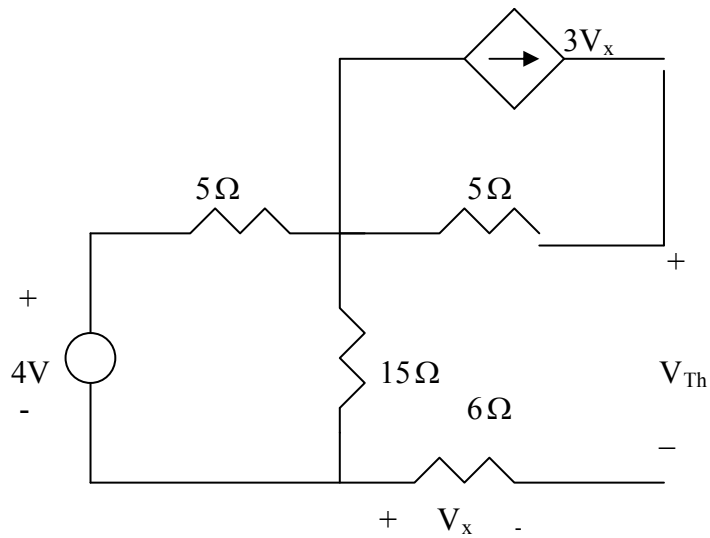

From the figure,

$$V_x = 0, \qquad V_{Th} = \frac{15}{15+5}(4) = 3\text{V}$$

To find $R_{eq,}$ consider the circuit below:

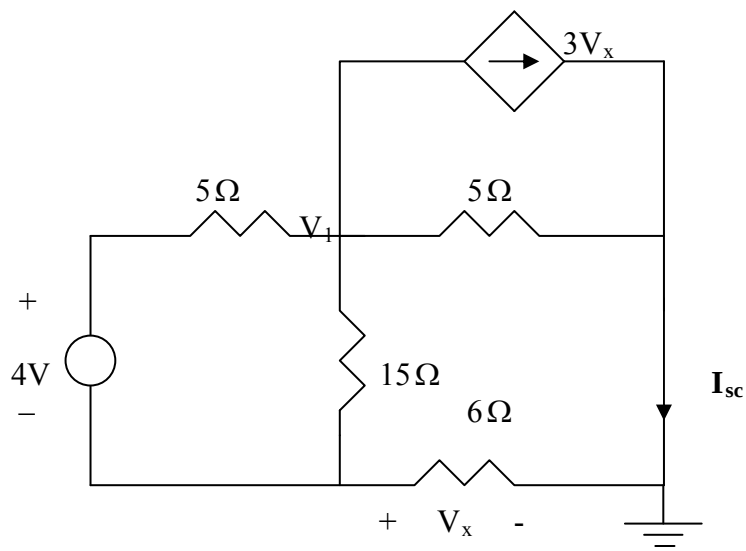

At node 1,

$$[(V_1 - V_x)/15] + [(V_1 - (4+V_x))/5] + [(V_1 - 0)/5] + 3V_x = 0 \text{ or}$$

www.konkur.in

$$0.4667V_1 + 2.733V_x = 0.8 \qquad (1)$$

At node x,

$[(V_x–0)/6] + [((V_x+4)–V_1)/5] + [(V_x–V_1)/15] = 0$ or
$–(0.2667)V_1 + 0.4333V_x = –0.8$ (2)

Adding (1) and (2) together lead to,

$(0.4667–0.2667)V_1 + (2.733+0.4333)V_x = 0$ or $V_1 = –(3.166/0.2)V_x = –15.83V_x$

Now we can put this into (1) and we get,

$0.4667(–15.83V_x) + 2.733V_x = 0.8 = (–7.388+2.733)V_x = –4.655V_x$ or $V_x = –0.17186$ V.

$I_{sc} = –V_x/6 = 0.02864$ and $R_{eq} = 3/(0.02864) = 104.75\ \Omega$

An alternate way to find R_{eq} is replace I_{sc} with a 1 amp current source flowing up and setting the 4 volts source to zero. We then find the voltage across the 1 amp current source which is equal to R_{eq}. First we note that $V_x = 6$ volts ;
$V_1 = 6+3.75 = –9.75$; $V_2 = 19x5 + V_1 = 95+9.75 = 104.75$ or $R_{eq} = 104.75\ \Omega$.

Clearly setting the load resistance to 104.75 Ω means that the circuit will deliver maximum power to it. Therefore,

$$p_{max} = [3/(2x104.75)]^2x104.75 = \mathbf{21.48\ mW}$$

www.konkur.in

Chapter 4, Solution 71.

We need R_{Th} and V_{Th} at terminals a and b. To find R_{Th}, we insert a 1-mA source at the terminals a and b as shown below.

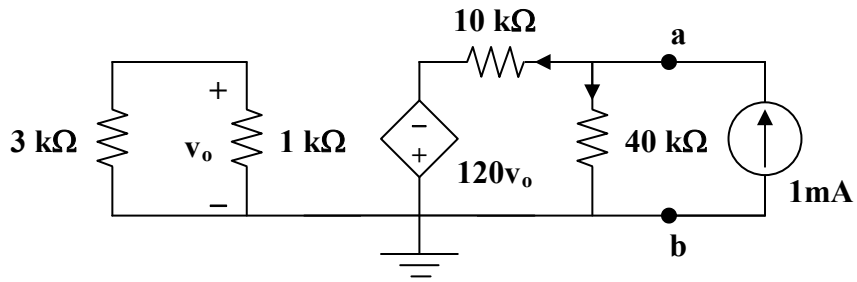

Assume that all resistances are in k ohms, all currents are in mA, and all voltages are in volts. At node a,

$$1 = (v_a/40) + [(v_a + 120v_o)/10], \text{ or } 40 = 5v_a + 480v_o \qquad (1)$$

The loop on the left side has no voltage source. Hence, $v_o = 0$. From (1), $v_a = 8$ V.

$$R_{Th} = v_a/1 \text{ mA} = 8 \text{ kohms}$$

To get V_{Th}, consider the original circuit. For the left loop,

$$v_o = (1/4)8 = 2 \text{ V}$$

For the right loop, $v_R = V_{Th} = (40/50)(-120v_o) = -192$

The resistance at the required resistor is

$$R = R_{Th} = \mathbf{8\ k\Omega}$$

$$p = V_{Th}^2/(4R_{Th}) = (-192)^2/(4x8x10^3) = \mathbf{1.152\ watts}$$

www.konkur.in

Chapter 4, Solution 72.

(a) R_{Th} and V_{Th} are calculated using the circuits shown in Fig. (a) and (b) respectively.

From Fig. (a), $R_{Th} = 2 + 4 + 6 =$ **12 ohms**

From Fig. (b), $-V_{Th} + 12 + 8 + 20 = 0$, or $V_{Th} =$ **40 V**

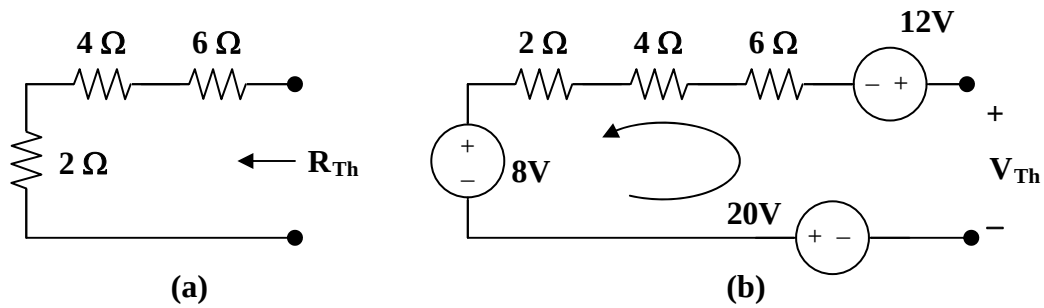

(b) $i = V_{Th}/(R_{Th} + R) = 40/(12 + 8) =$ **2A**

(c) For maximum power transfer, $R_L = R_{Th} =$ **12 ohms**

(d) $p = V_{Th}^2/(4R_{Th}) = (40)^2/(4x12) =$ **33.33 watts**.

www.konkur.in

Chapter 4, Solution 73

Find the Thevenin's equivalent circuit across the terminals of R.

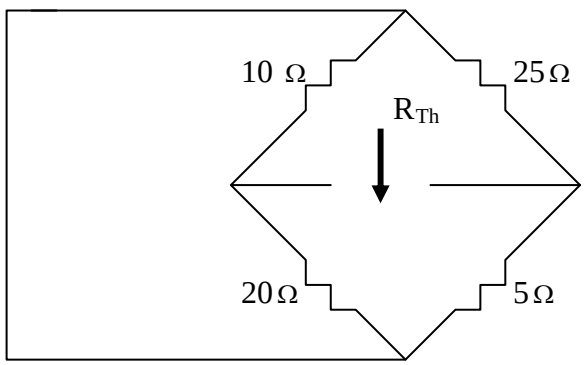

$$R_{Th} = 10 // 20 + 25 // 5 = 325/30 = 10.833\Omega$$

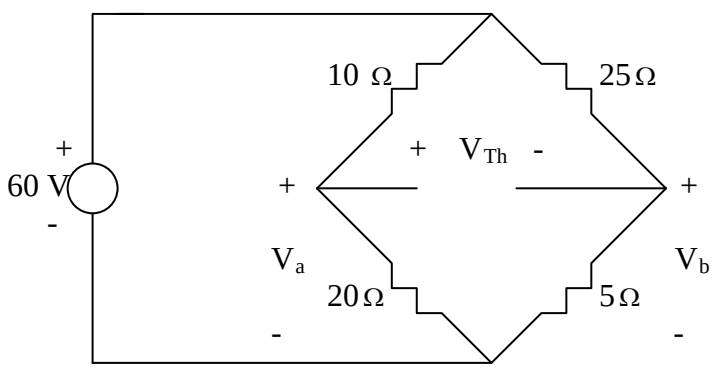

$$V_a = \frac{20}{30}(60) = 40, \qquad V_b = \frac{5}{30}(60) = 10$$

$$-V_a + V_{Th} + V_b = 0 \quad \longrightarrow \quad V_{Th} = V_a - V_b = 40 - 10 = 30 \text{ V}$$

$$\boldsymbol{p_{max} = \frac{V_{Th}^{\ 2}}{4R_{Th}} = \frac{30^2}{4x10.833} = 20.77 \text{ W}}.$$

www.konkur.in

Chapter 4, Solution 74.

When R_L is removed and V_s is short-circuited,

$$R_{Th} = R_1||R_2 + R_3||R_4 = [R_1 R_2/(R_1 + R_2)] + [R_3 R_4/(R_3 + R_4)]$$

$$R_L = R_{Th} = \mathbf{(R_1 R_2 R_3 + R_1 R_2 R_4 + R_1 R_3 R_4 + R_2 R_3 R_4)/[(R_1 + R_2)(R_3 + R_4)]}$$

When R_L is removed and we apply the voltage division principle,

$$V_{oc} = V_{Th} = v_{R2} - v_{R4}$$

$$= ([R_2/(R_1 + R_2)] - [R_4/(R_3 + R_4)])V_s = \{[(R_2R_3) - (R_1R_4)]/[(R_1 + R_2)(R_3 + R_4)]\}V_s$$

$$p_{max} = V_{Th}^2/(4R_{Th})$$

$$= \{[(R_2R_3) - (R_1R_4)]^2/[(R_1 + R_2)(R_3 + R_4)]^2\}V_s^2[(R_1 + R_2)(R_3 + R_4)]/[4(a)]$$

$$\text{where } a = (R_1 R_2 R_3 + R_1 R_2 R_4 + R_1 R_3 R_4 + R_2 R_3 R_4)$$

$$p_{max} =$$

$$\mathbf{[(R_2R_3) - (R_1R_4)]^2V_s^2/[4(R_1 + R_2)(R_3 + R_4) (R_1 R_2 R_3 + R_1 R_2 R_4 + R_1 R_3 R_4 + R_2 R_3 R_4)]}$$

www.konkur.in

Chapter 4, Solution 75.

We need to first find R_{Th} and V_{Th}.

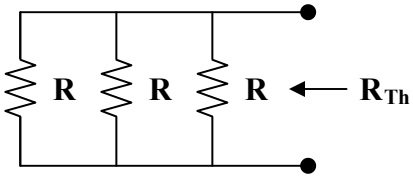

(a)

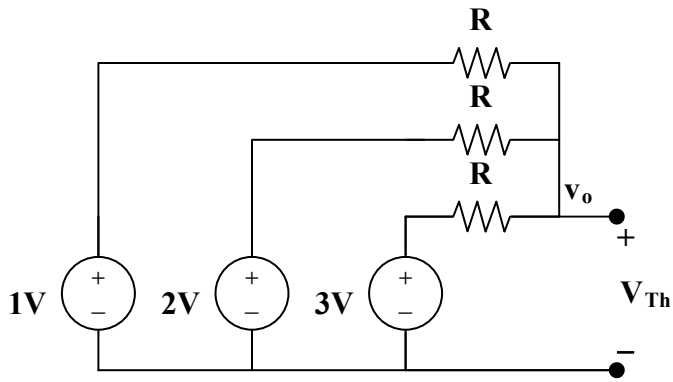

(b)

Consider the circuit in Fig. (a).

$$(1/R_{eq}) = (1/R) + (1/R) + (1/R) = 3/R$$

$$R_{eq} = R/3$$

From the circuit in Fig. (b),

$$((1 - v_o)/R) + ((2 - v_o)/R) + ((3 - v_o)/R) = 0$$

$$v_o = 2 = V_{Th}$$

For maximum power transfer,

$$R_L = R_{Th} = R/3$$

$$P_{max} = [(V_{Th})^2/(4R_{Th})] = \mathbf{3\ mW}$$

$$R_{Th} = [(V_{Th})^2/(4P_{max})] = 4/(4xP_{max}) = 1/P_{max} = R/3$$

$$R = 3/(3x10^{-3}) = \mathbf{1\ k\Omega}$$

1 kΩ, 3 mW

www.konkur.in

Chapter 4, Solution 76.

Follow the steps in Example 4.14. The schematic and the output plots are shown below. From the plot, we obtain,

V = **92 V** [i = 0, voltage axis intercept]

R = Slope = (120 – 92)/1 = **28 ohms**

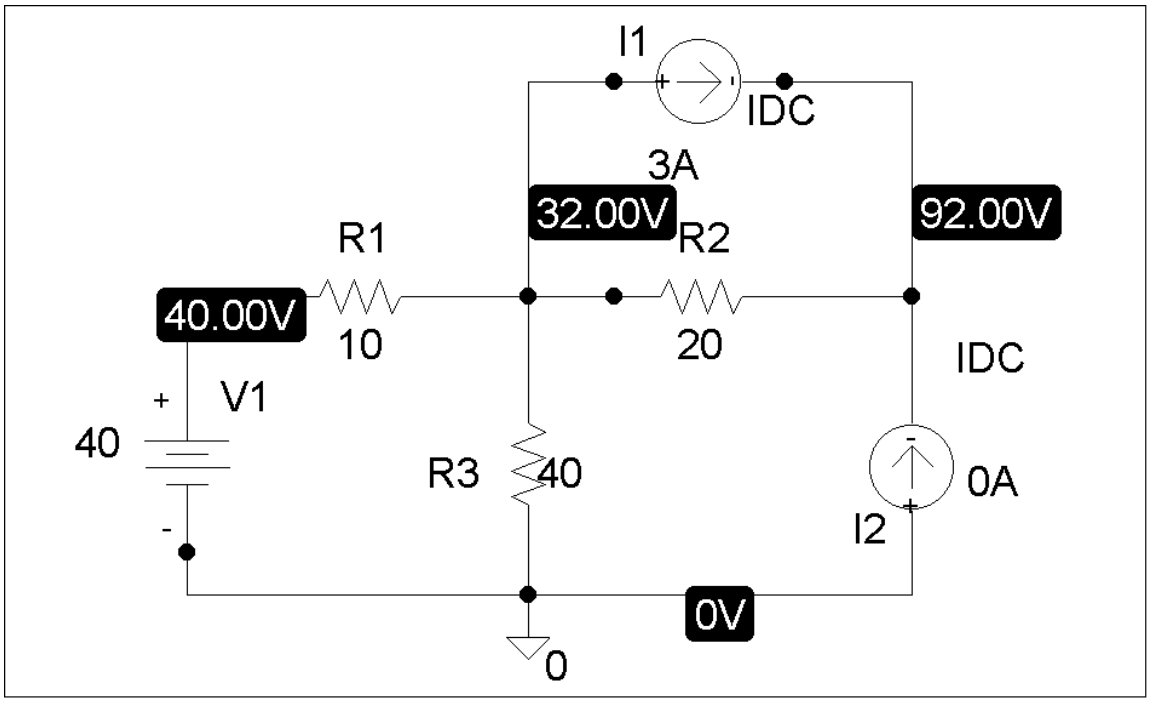

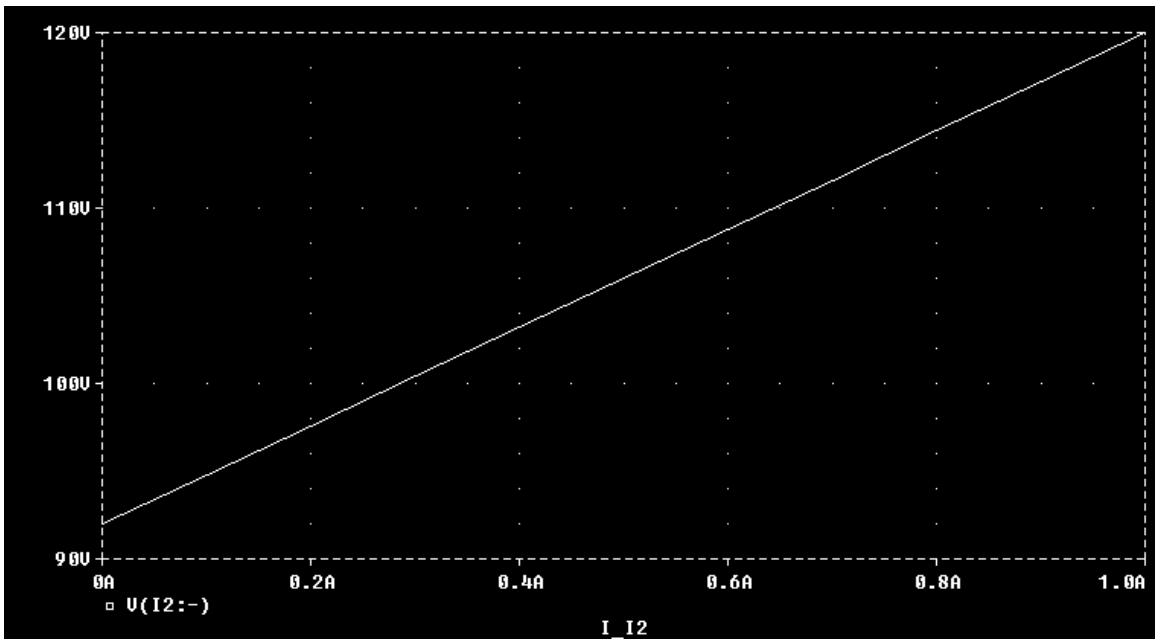

www.konkur.in

Chapter 4, Solution 77.

(a) The schematic is shown below. We perform a dc sweep on a current source, I1, connected between terminals a and b. We label the top and bottom of source I1 as 2 and 1 respectively. We plot V(2) – V(1) as shown.

$$V_{Th} = \mathbf{4\ V} \text{ [zero intercept]}$$

$$R_{Th} = (7.8 - 4)/1 = \mathbf{3.8\ ohms}$$

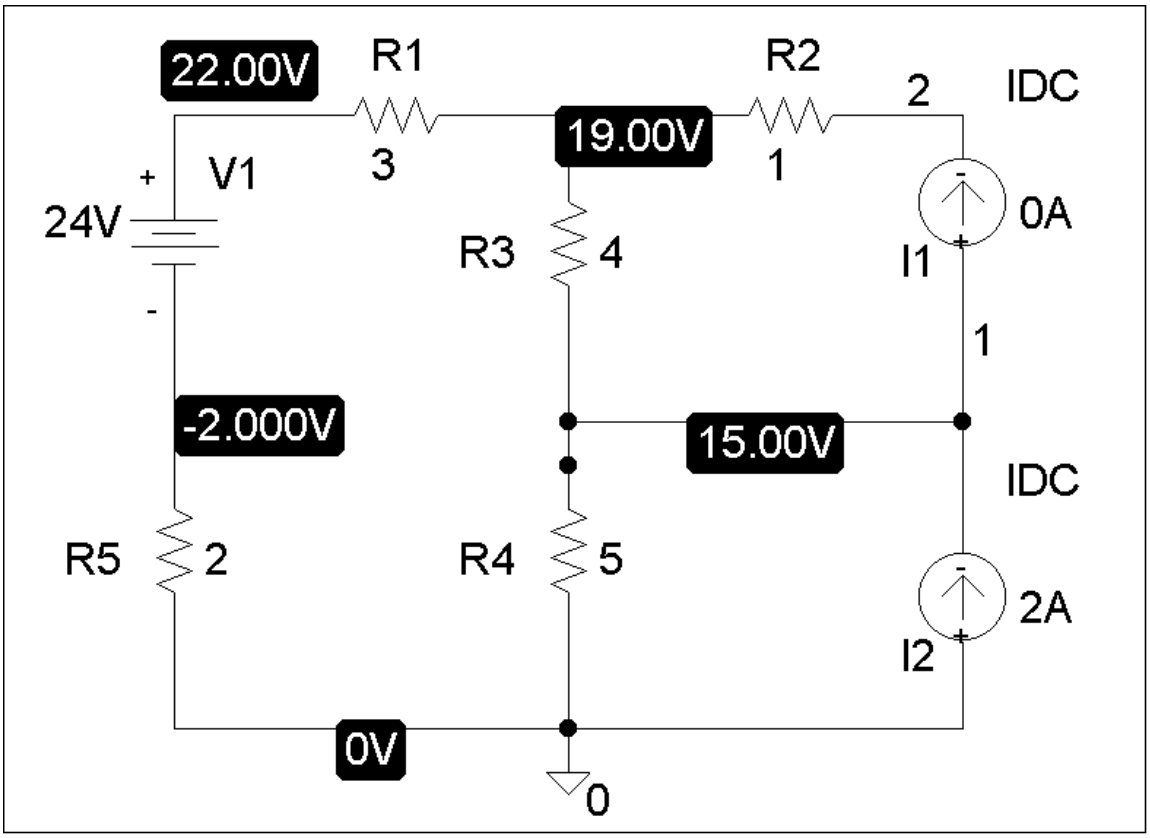

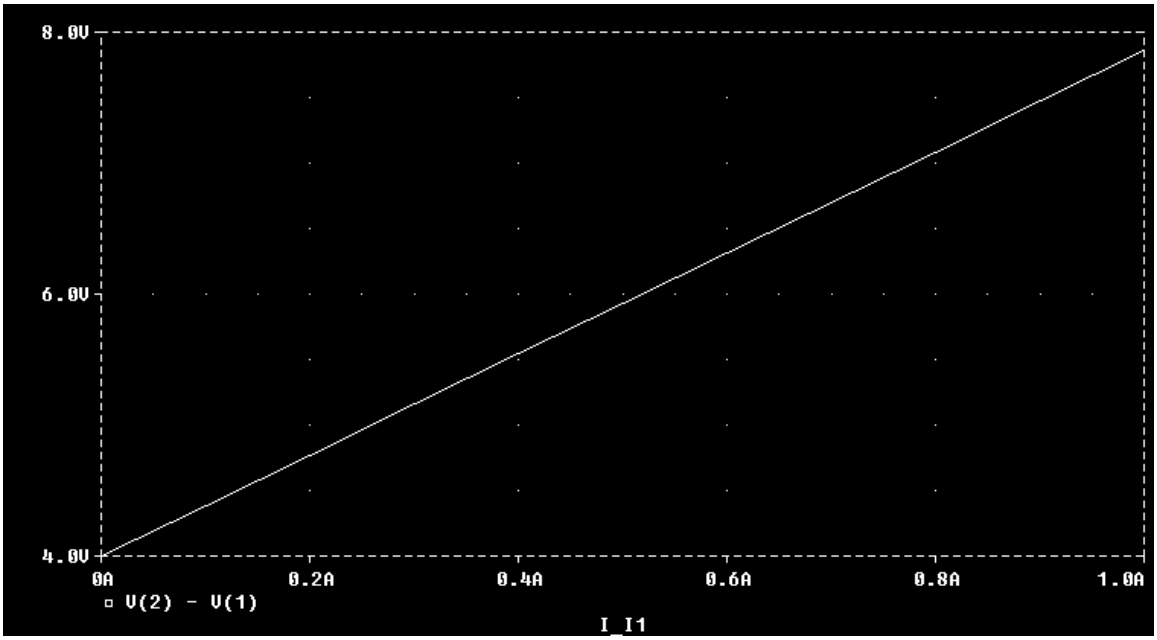

(b) Everything remains the same as in part (a) except that the current source, I1, is connected between terminals b and c as shown below. We perform a dc sweep on I1 and obtain the plot shown below. From the plot, we obtain,

$$V = \mathbf{15\ V} \text{ [zero intercept]}$$

$$R = (18.2 - 15)/1 = \mathbf{3.2\ ohms}$$

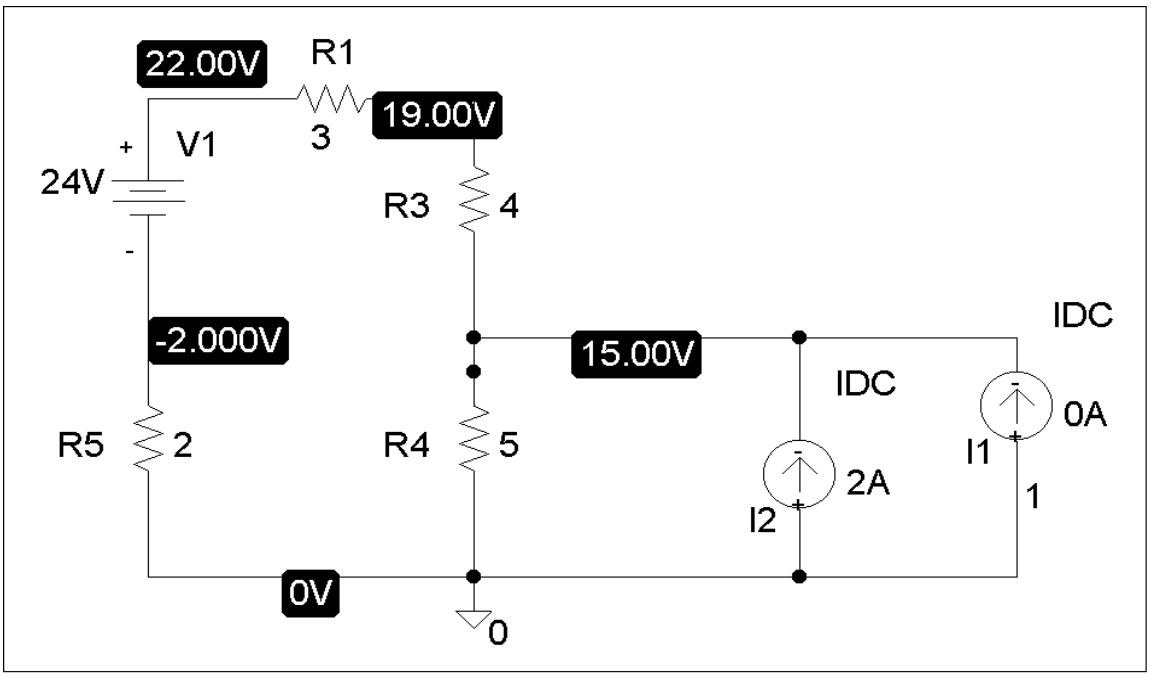

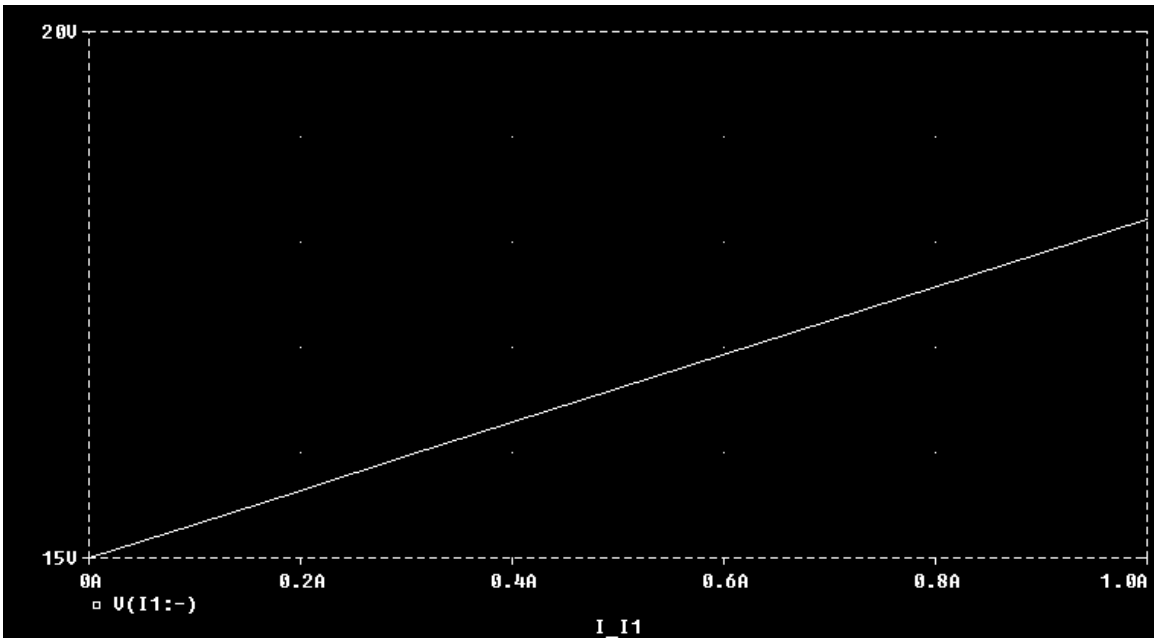

www.konkur.in

Chapter 4, Solution 78.

The schematic is shown below. We perform a dc sweep on the current source, I1, connected between terminals a and b. The plot is shown. From the plot we obtain,

$$V_{Th} = \mathbf{-80\ V} \text{ [zero intercept]}$$

$$R_{Th} = (1920 - (-80))/1 = \mathbf{2\ k\ ohms}$$

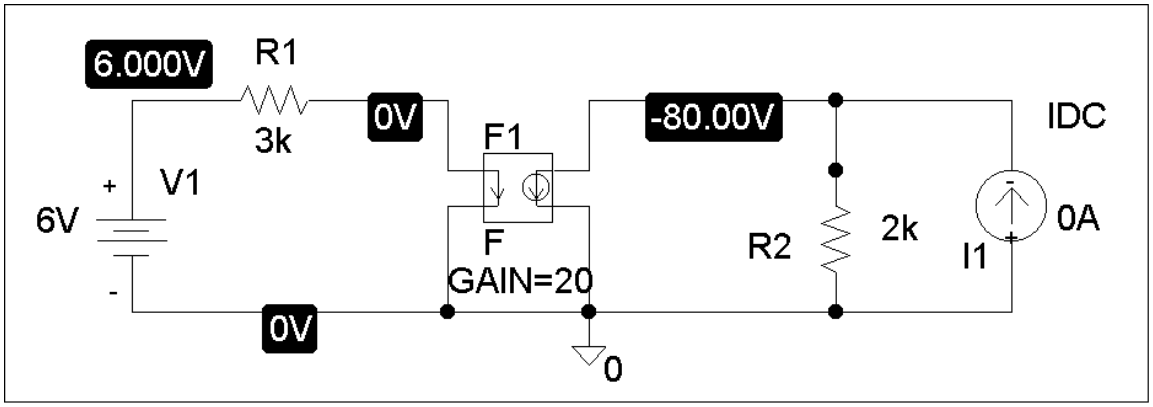

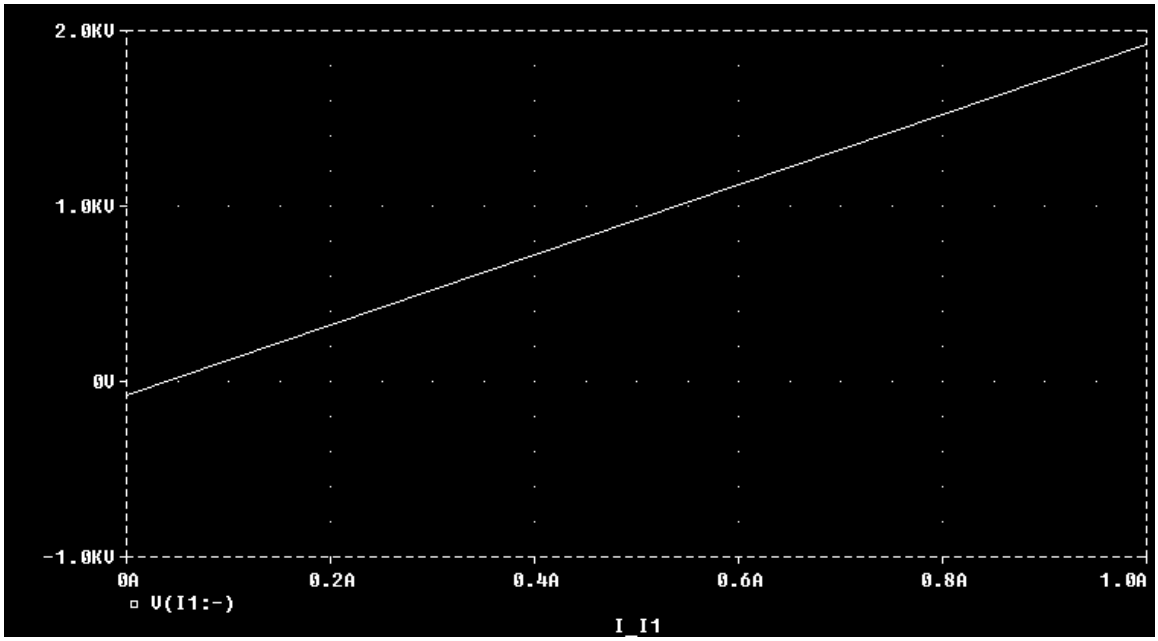

www.konkur.in

Chapter 4, Solution 79.

After drawing and saving the schematic as shown below, we perform a dc sweep on I1 connected across a and b. The plot is shown. From the plot, we get,

$$V = \mathbf{167\ V} \text{ [zero intercept]}$$

$$R = (177 - 167)/1 = \mathbf{10\ ohms}$$

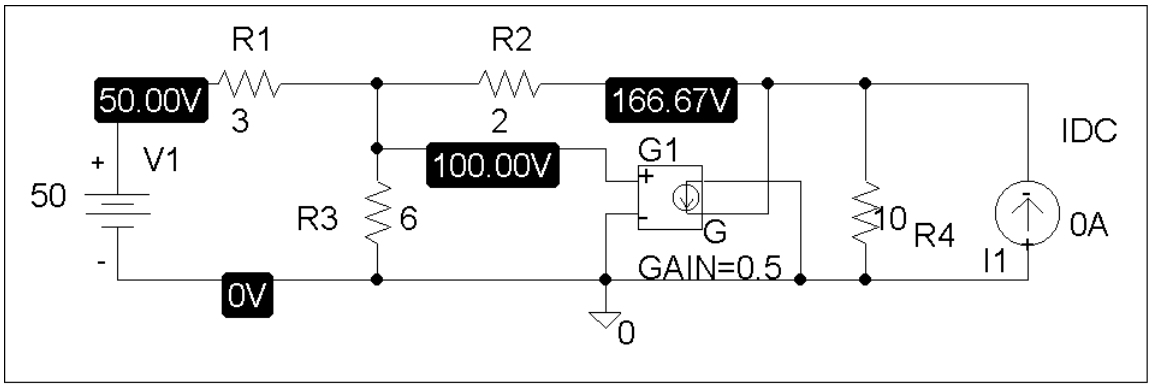

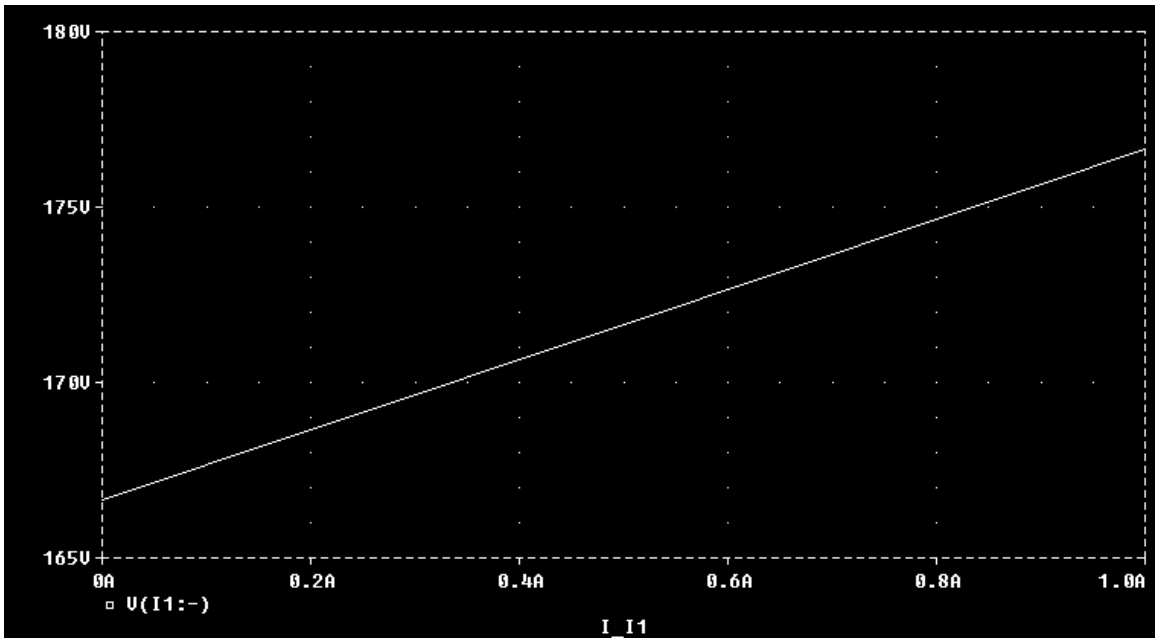

www.konkur.in

Chapter 4, Solution 80.

The schematic in shown below. We label nodes a and b as 1 and 2 respectively. We perform dc sweep on I1. In the Trace/Add menu, type v(1) – v(2) which will result in the plot below. From the plot,

$$V_{Th} = \mathbf{40\ V} \text{ [zero intercept]}$$

$$R_{Th} = (40 - 17.5)/1 = \mathbf{22.5\ ohms} \text{ [slope]}$$

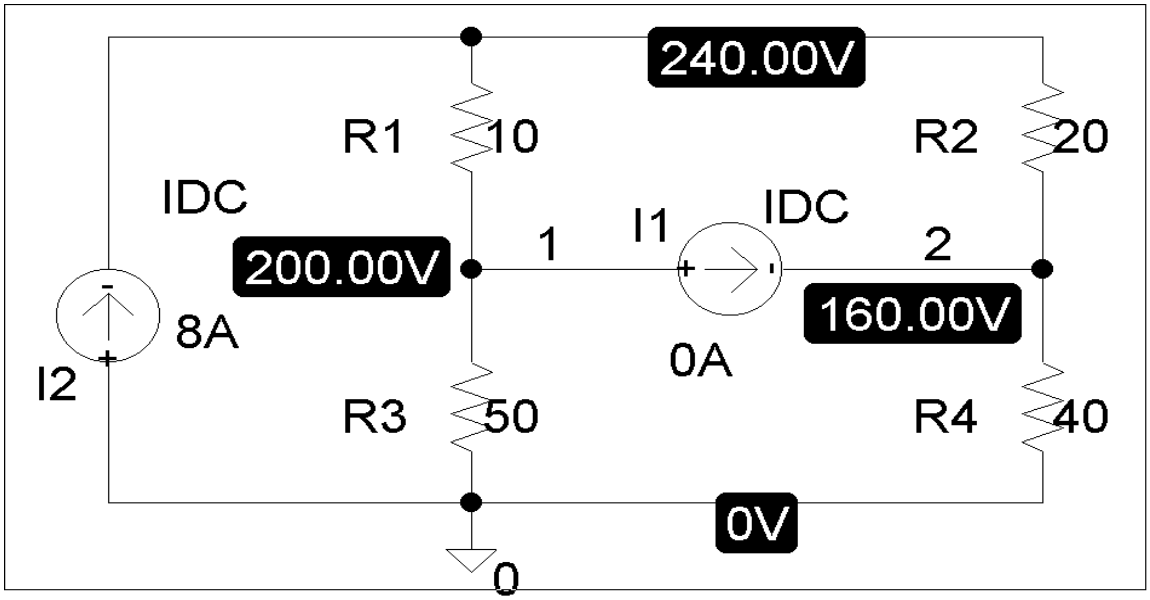

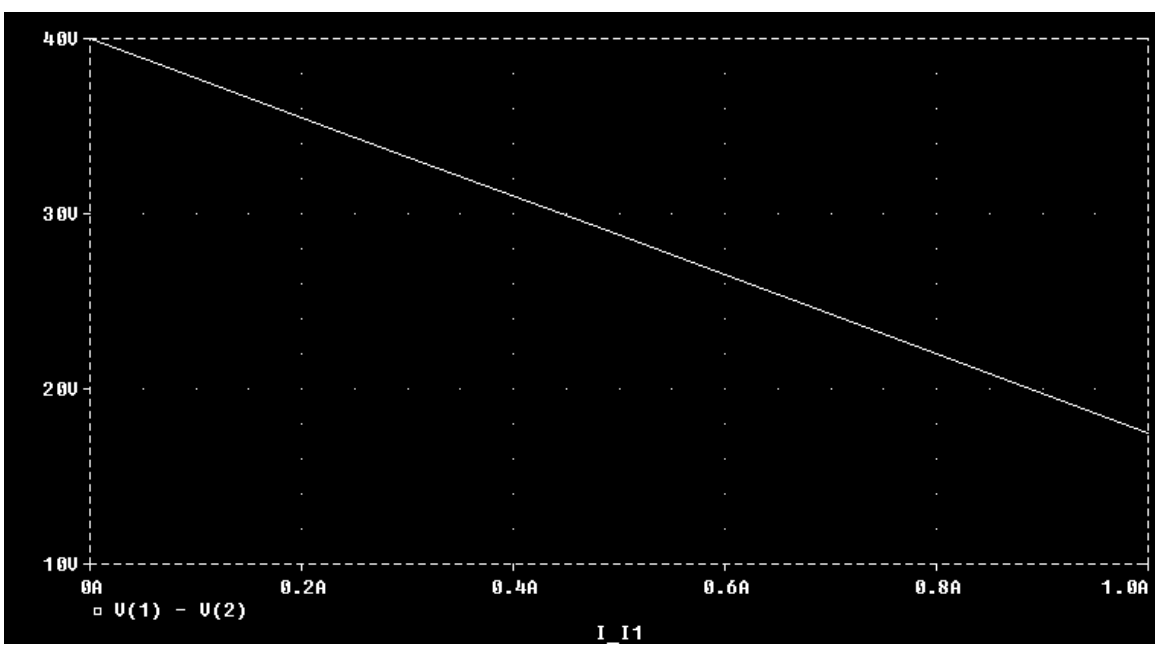

www.konkur.in

Chapter 4, Solution 81.

The schematic is shown below. We perform a dc sweep on the current source, I2, connected between terminals a and b. The plot of the voltage across I2 is shown below. From the plot,

$$V_{Th} = \mathbf{10\ V} \text{ [zero intercept]}$$

$R_{Th} = (10 - 6.7)/1 =$ **3.3 ohms**. Note that this is in good agreement with the exact value of 3.333 ohms.

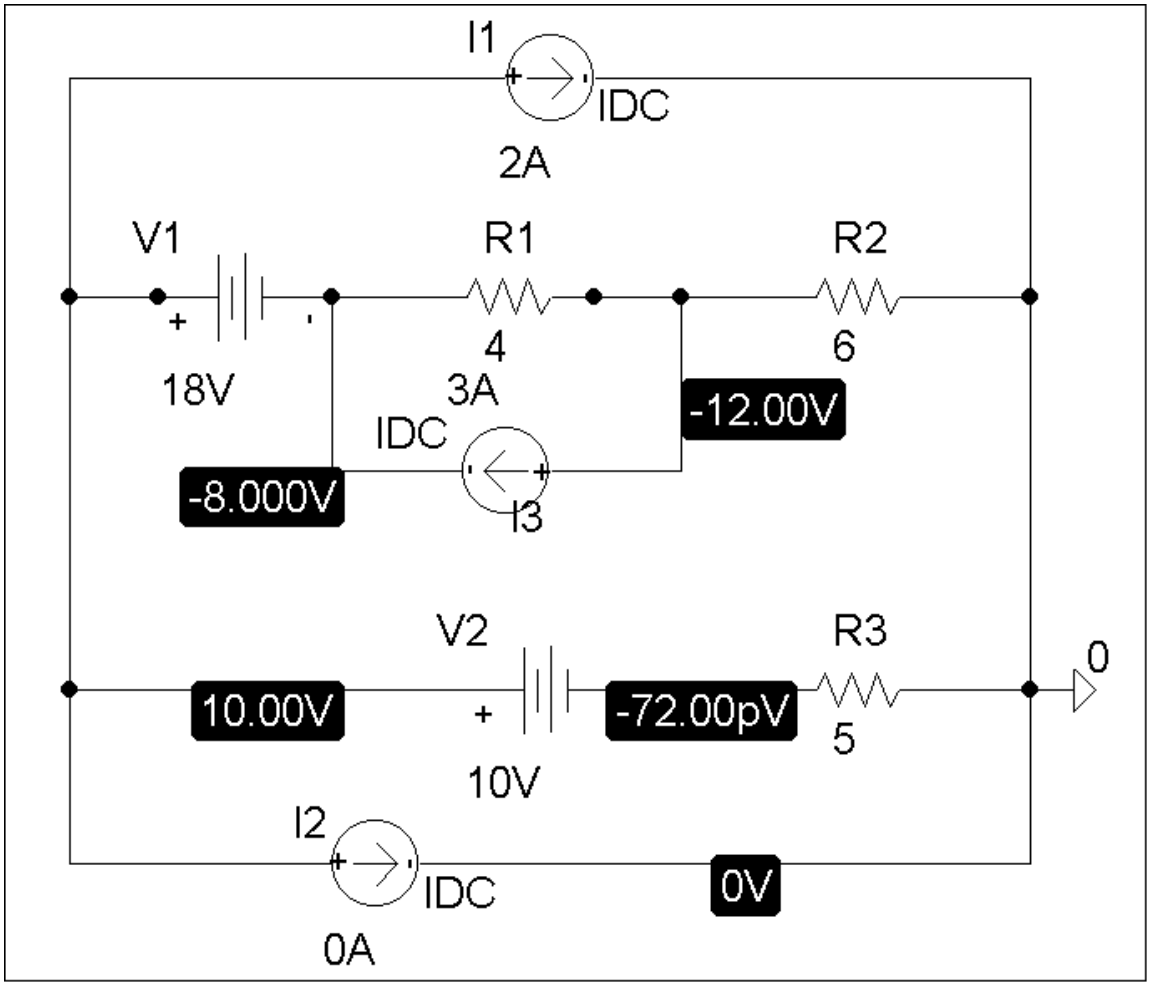

www.konkur.in

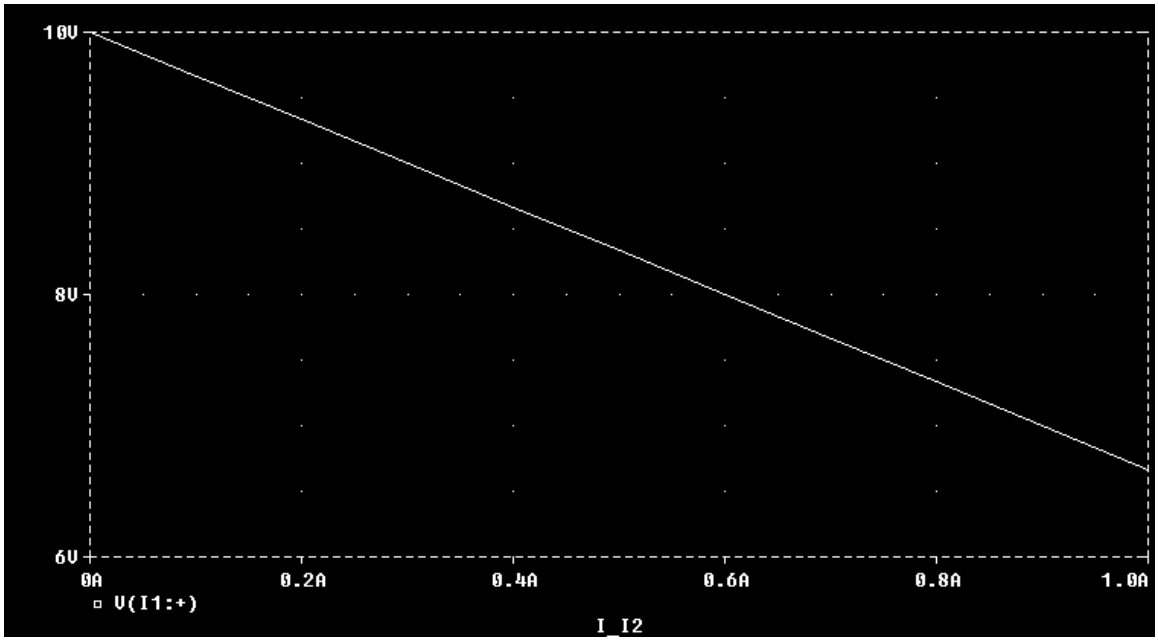

www.konkur.in

Chapter 4, Solution 82.

$V_{Th} = V_{oc} = 12$ V, $I_{sc} = 20$ A

$$R_{Th} = V_{oc}/I_{sc} = 12/20 = 0.6 \text{ ohm.}$$

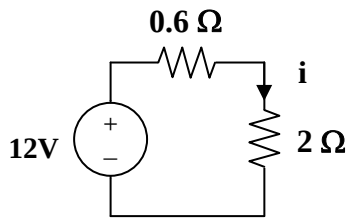

$i = 12/2.6$, $p = i^2R = (12/2.6)^2(2) =$ **42.6 watts**

www.konkur.in

Chapter 4, Solution 83.

$V_{Th} = V_{oc} = 12$ V, $I_{sc} = I_N = 1.5$ A

$R_{Th} = V_{Th}/I_N = 8$ ohms, $V_{Th} =$ **12 V**, $R_{Th} =$ **8 ohms**

www.konkur.in

Chapter 4, Solution 84

Let the equivalent circuit of the battery terminated by a load be as shown below.

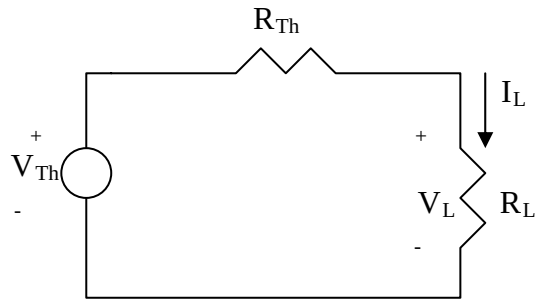

For open circuit,

$R_L = \infty, \quad \longrightarrow \quad V_{Th} = V_{oc} = V_L = \underline{10.8\text{ V}}$

When R_L = 4 ohm, V_L=10.5,

$$I_L = \frac{V_L}{R_L} = 10.8/4 = 2.7$$

But

$$V_{Th} = V_L + I_L R_{Th} \quad \longrightarrow \quad R_{Th} = \frac{V_{Th} - V_L}{I_L} = \frac{12 - 10.8}{2.7} = \underline{0.4444\Omega}$$

= **444.4 mΩ**.

www.konkur.in

Chapter 4, Solution 85

(a) Consider the equivalent circuit terminated with R as shown below.

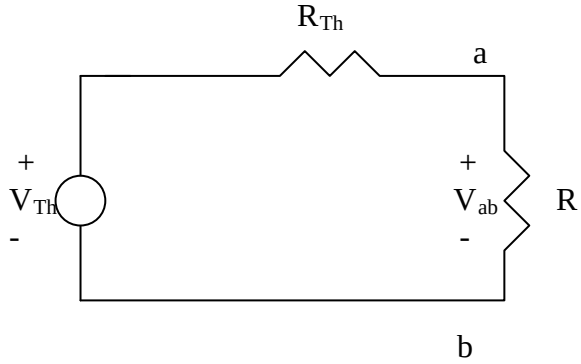

$$V_{ab} = \frac{R}{R + R_{Th}} V_{Th} \quad \longrightarrow \quad 6 = \frac{10}{10 + R_{Th}} V_{Th}$$

or

$$60 + 6R_{Th} = 10V_{Th} \qquad (1)$$

where R_{Th} is in k-ohm.

Similarly,

$$12 = \frac{30}{30 + R_{Th}} V_{Th} \quad \longrightarrow \quad 360 + 12R_{Th} = 30V_{Th} \qquad (2)$$

Solving (1) and (2) leads to

$$\underline{\boldsymbol{V_{Th} = 24\ \mathrm{V},\ \ R_{Th} = 30k\Omega}}$$

(b)

$$\boldsymbol{V_{ab} = \frac{20}{20 + 30}(24) = \underline{9.6\ \mathrm{V}}}$$

www.konkur.in

Chapter 4, Solution 86.

We replace the box with the Thevenin equivalent.

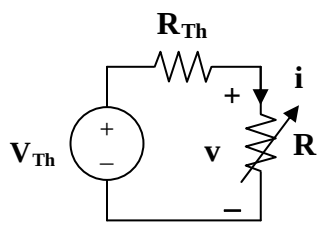

$$V_{Th} = v + iR_{Th}$$

When i = 1.5, v = 3, which implies that $V_{Th} = 3 + 1.5R_{Th}$ (1)

When i = 1, v = 8, which implies that $V_{Th} = 8 + 1xR_{Th}$ (2)

From (1) and (2), R_{Th} = 10 ohms and V_{Th} = 18 V.

(a) When R = 4, i = $V_{Th}/(R + R_{Th})$ = 18/(4 + 10) = **1.2857 A**

(b) For maximum power, R = R_{TH}

$$Pmax = (V_{Th})^2/4R_{Th} = 18^2/(4x10) = \mathbf{8.1\ watts}$$

www.konkur.in

Chapter 4, Solution 87.

(a)

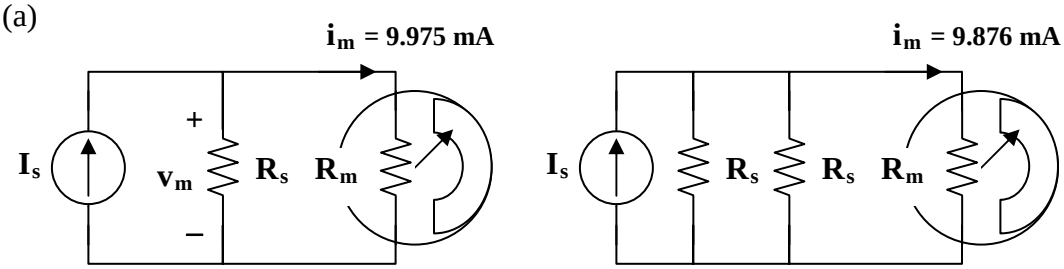

(a) **(b)**

From Fig. (a),

$$v_m = R_m i_m = 9.975 \text{ mA x } 20 = 0.1995 \text{ V}$$

$$I_s = 9.975 \text{ mA} + (0.1995/R_s) \qquad (1)$$

From Fig. (b),

$$v_m = R_m i_m = 20\text{x}9.876 = 0.19752 \text{ V}$$

$$I_s = 9.876 \text{ mA} + (0.19752/2\text{k}) + (0.19752/R_s)$$

$$= 9.975 \text{ mA} + (0.19752/R_s) \qquad (2)$$

Solving (1) and (2) gives,

R_s = **8 k ohms**, I_s = **10 mA**

(b)

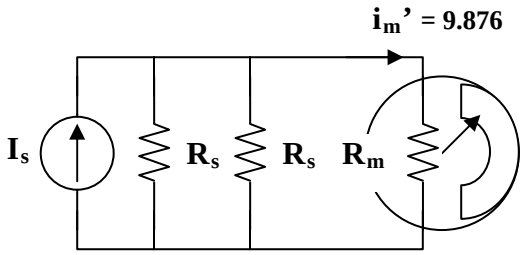

(b)

$$8\text{k}||4\text{k} = 2.667 \text{ k ohms}$$

i_m' = [2667/(2667 + 20)](10 mA) = **9.926 mA**

www.konkur.in

Chapter 4, Solution 88

To find $R_{Th,}$ consider the circuit below.

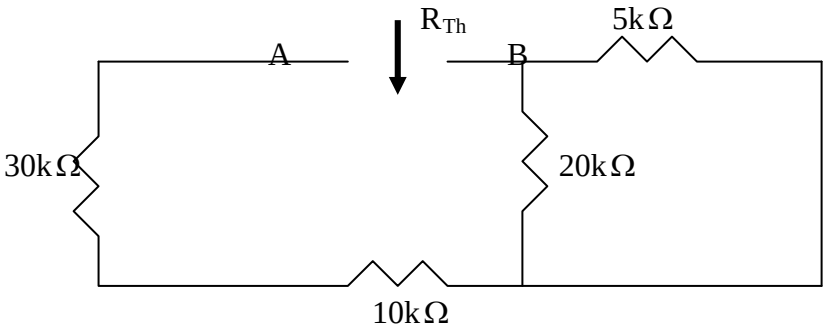

$$R_{Th} = 30 + 10 + 20 // 5 = 44k\Omega$$

To find V_{Th} , consider the circuit below.

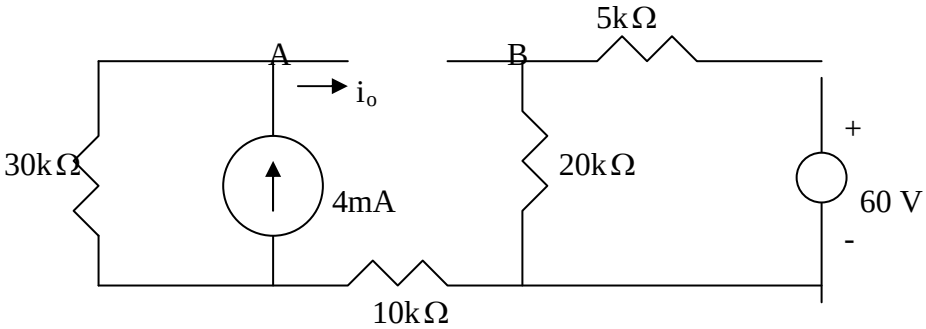

$$V_A = 30x4 = 120, \qquad V_B = \frac{20}{25}(60) = 48, \qquad V_{Th} = V_A - V_B = 72 \text{ V}$$

www.konkur.in

The Thevenin equivalent circuit is shown below.

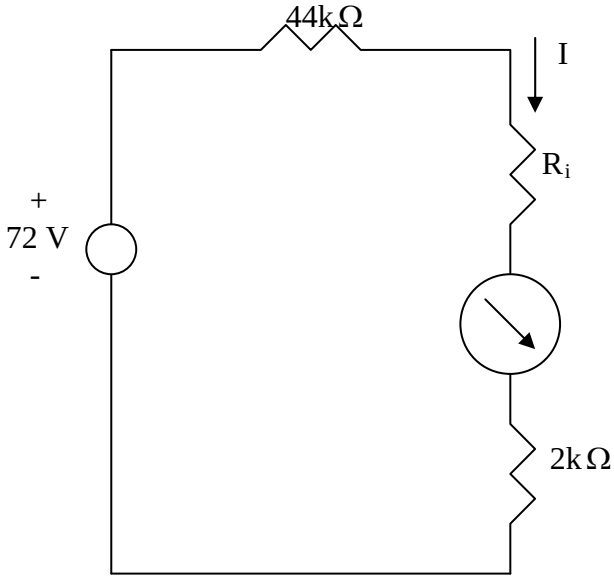

$$I = \frac{72}{44 + 2 + R_i} \text{ mA}$$

assuming R_i is in k-ohm.

(a) When $R_i = 500\,\Omega$,

$$\boldsymbol{I = \frac{72}{44 + 2 + 0.5} = \underline{1.548\text{ mA}}}$$

(b) When $R_i = 0\,\Omega$,

$$\boldsymbol{I = \frac{72}{44 + 2 + 0} = \underline{1.565\text{ mA}}}$$

www.konkur.in

Chapter 4, Solution 89

It is easy to solve this problem using Pspice.

(a) The schematic is shown below. We insert IPROBE to measure the desired ammeter reading. We insert a very small resistance in series IPROBE to avoid problem. After the circuit is saved and simulated, the current is displaced on IPROBE as **99.99μA** .

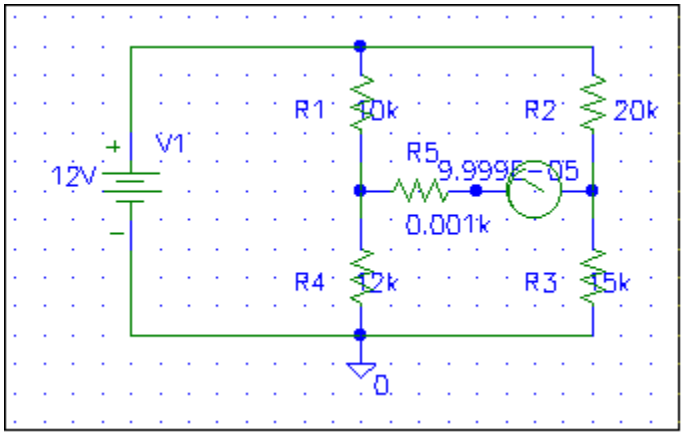

(b) By interchanging the ammeter and the 12-V voltage source, the schematic is shown below. We obtain exactly the same result as in part (a).

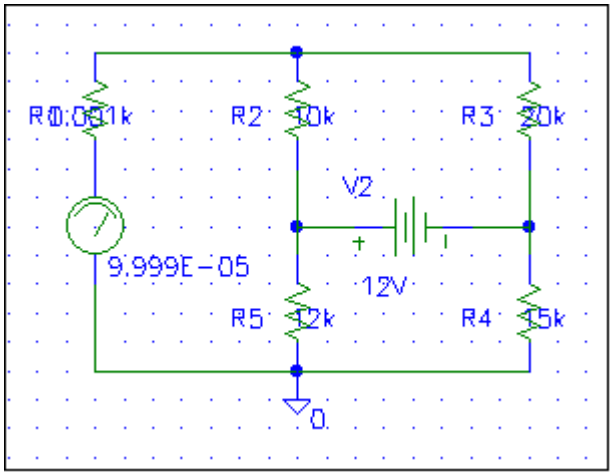

www.konkur.in

Chapter 4, Solution 90.

$R_x = (R_3/R_1)R_2 = (4/2)R_2 = 42.6, R_2 = 21.3$

which is (21.3ohms/100ohms)% = **21.3%**

www.konkur.in

Chapter 4, Solution 91.

$R_x = (R_3/R_1)R_2$

(a) Since $0 < R_2 < 50$ ohms, to make $0 < R_x < 10$ ohms requires that when $R_2 = 50$ ohms, $R_x = 10$ ohms.

$$10 = (R_3/R_1)50 \text{ or } R_3 = R_1/5$$

so we select R_1 = **100 ohms** and R_3 = **20 ohms**

(b) For $0 < R_x < 100$ ohms

$$100 = (R_3/R_1)50, \text{ or } R_3 = 2R_1$$

So we can select R_1 = **100 ohms** and R_3 = **200 ohms**

www.konkur.in

Chapter 4, Solution 92.

For a balanced bridge, $v_{ab} = 0$. We can use mesh analysis to find v_{ab}. Consider the circuit in Fig. (a), where i_1 and i_2 are assumed to be in mA.

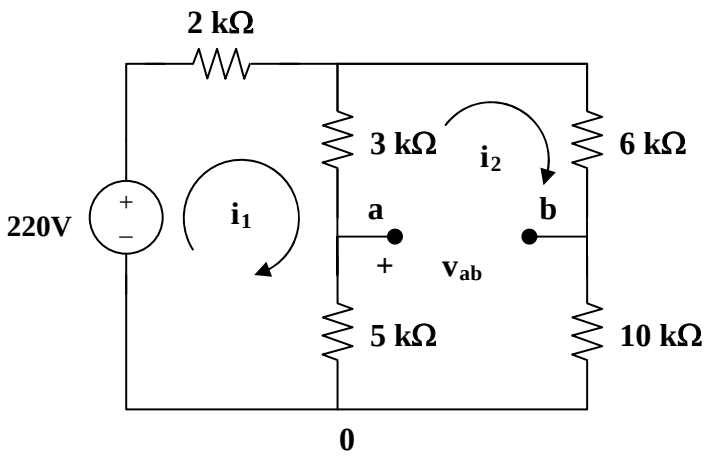

(a)

$$220 = 2i_1 + 8(i_1 - i_2) \text{ or } 220 = 10i_1 - 8i_2 \quad (1)$$

$$0 = 24i_2 - 8i_1 \text{ or } i_2 = (1/3)i_1 \quad (2)$$

From (1) and (2),

$$i_1 = 30 \text{ mA and } i_2 = 10 \text{ mA}$$

Applying KVL to loop 0ab0 gives

$$5(i_2 - i_1) + v_{ab} + 10i_2 = 0 \text{ V}$$

Since $v_{ab} = 0$, the bridge is balanced.

When the 10 k ohm resistor is replaced by the 18 k ohm resistor, the gridge becomes unbalanced. (1) remains the same but (2) becomes

$$0 = 32i_2 - 8i_1, \text{ or } i_2 = (1/4)i_1 \quad (3)$$

Solving (1) and (3),

$$i_1 = 27.5 \text{ mA}, \; i_2 = 6.875 \text{ mA}$$

$$v_{ab} = 5(i_1 - i_2) - 18i_2 = -20.625 \text{ V}$$

$$V_{Th} = v_{ab} = -20.625 \text{ V}$$

www.konkur.in

To obtain R_{Th}, we convert the delta connection in Fig. (b) to a wye connection shown in Fig. (c).

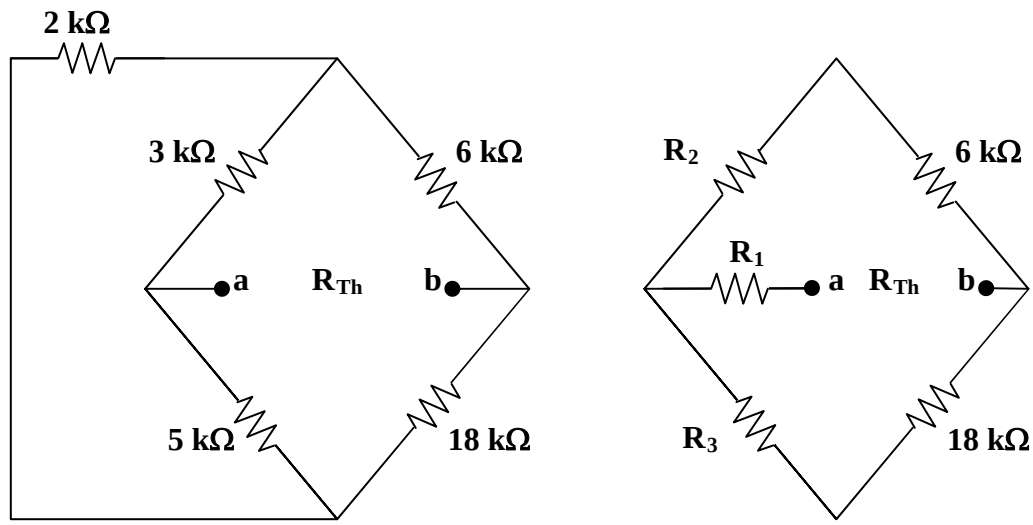

(b) **(c)**

$$R_1 = 3x5/(2 + 3 + 5) = 1.5 \text{ k ohms}, \quad R_2 = 2x3/10 = 600 \text{ ohms},$$

$$R_3 = 2x5/10 = 1 \text{ k ohm.}$$

$$R_{Th} = R_1 + (R_2 + 6)||(R_3 + 18) = 1.5 + 6.6||9 = 6.398 \text{ k ohms}$$

$$R_L = R_{Th} = \mathbf{6.398\ k\ ohms}$$

$$P_{max} = (V_{Th})^2/(4R_{Th}) = (20.625)^2/(4x6.398) = \mathbf{16.622\ mWatts}$$

www.konkur.in

Chapter 4, Solution 93.

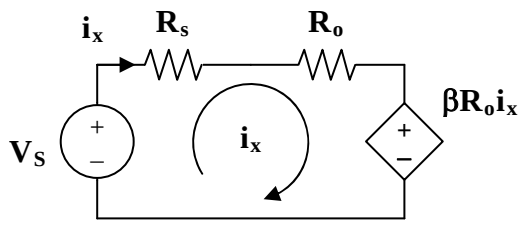

$$-V_s + (R_s + R_o)i_x + \beta R_o i_x = 0$$

$$i_x = \mathbf{V_s/(R_s + (1 + \beta)R_o)}$$

www.konkur.in

Chapter 4, Solution 94.

(a) $$V_o/V_g = R_p/(R_g + R_s + R_p) \quad (1)$$

$$R_{eq} = R_p||(R_g + R_s) = R_g$$

$$R_g = R_p(R_g + R_s)/(R_p + R_g + R_s)$$

$$R_gR_p + R_g^2 + R_gR_s = R_pR_g + R_pR_s$$

$$R_pR_s = R_g(R_g + R_s) \quad (2)$$

From (1), $$R_p/\alpha = R_g + R_s + R_p$$

$$R_g + R_s = R_p((1/\alpha) - 1) = R_p(1 - \alpha)/\alpha \quad (1a)$$

Combining (2) and (1a) gives,

$$R_s = [(1 - \alpha)/\alpha]R_{eq} \quad (3)$$

$$= (1 - 0.125)(100)/0.125 = \mathbf{700\ ohms}$$

From (3) and (1a),

$$R_p(1 - \alpha)/\alpha = R_g + [(1 - \alpha)/\alpha]R_g = R_g/\alpha$$

$$R_p = R_g/(1 - \alpha) = 100/(1 - 0.125) = \mathbf{114.29\ ohms}$$

(b)

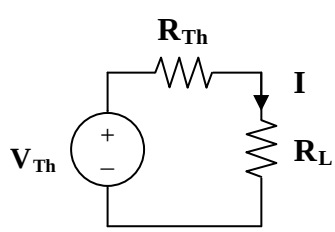

$$V_{Th} = V_s = 0.125V_g = 1.5\ V$$

$$R_{Th} = R_g = 100\ ohms$$

$$I = V_{Th}/(R_{Th} + R_L) = 1.5/150 = \mathbf{10\ mA}$$

www.konkur.in

Chapter 4, Solution 95.

Let 1/sensitivity = 1/(20 k ohms/volt) = 50 μA

For the 0 – 10 V scale,

$$R_m = V_{fs}/I_{fs} = 10/50\ \mu A = 200 \text{ k ohms}$$

For the 0 – 50 V scale,

$$R_m = 50(20 \text{ k ohms/V}) = 1 \text{ M ohm}$$

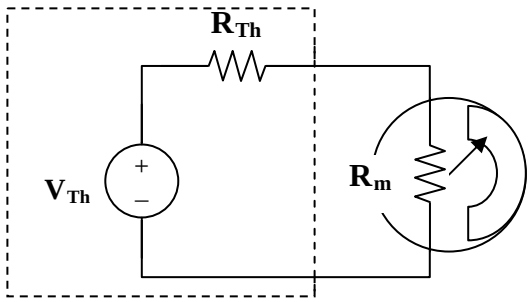

$$V_{Th} = I(R_{Th} + R_m)$$

(a) A 4V reading corresponds to

$$I = (4/10)I_{fs} = 0.4x50\ \mu A = 20\ \mu A$$

$$V_{Th} = 20\ \mu A\ R_{Th} + 20\ \mu A\ 250 \text{ k ohms}$$

$$= 4 + 20\ \mu A\ R_{Th} \qquad (1)$$

(b) A 5V reading corresponds to

$$I = (5/50)I_{fs} = 0.1 \text{ x } 50\ \mu A = 5\ \mu A$$

$$V_{Th} = 5\ \mu A \text{ x } R_{Th} + 5\ \mu A \text{ x } 1 \text{ M ohm}$$

$$V_{Th} = 5 + 5\ \mu A\ R_{Th} \qquad (2)$$

From (1) and (2)

$$0 = -1 + 15\ \mu A\ R_{Th} \text{ which leads to } R_{Th} = \mathbf{66.67\ k\ ohms}$$

From (1),

$$V_{Th} = 4 + 20x10^{-6}x(1/(15x10^{-6})) = \mathbf{5.333\ V}$$

www.konkur.in

Chapter 4, Solution 96.

(a) The resistance network can be redrawn as shown in Fig. (a),

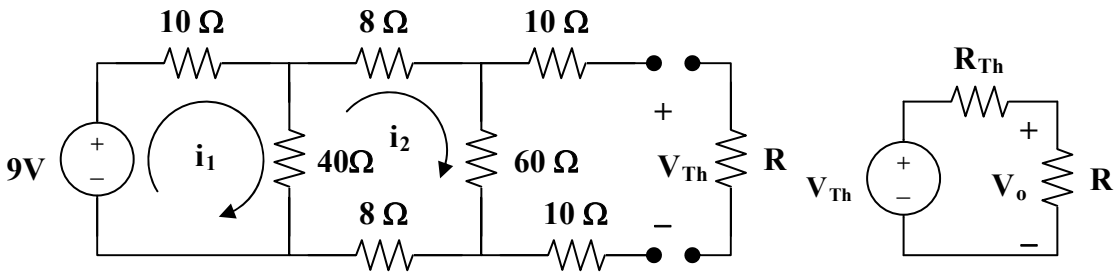

(a) **(b)**

$$R_{Th} = 10 + 10 + [60||(8 + 8 + [10||40])] = 20 + (60||24) = 37.14 \text{ ohms}$$

Using mesh analysis,

$$-9 + 50i_1 - 40i_2 = 0 \qquad (1)$$
$$116i_2 - 40i_1 = 0 \text{ or } i_1 = 2.9i_2 \qquad (2)$$

From (1) and (2), $i_2 = 9/105 = 0.08571$

$$V_{Th} = 60i_2 = 5.143 \text{ V}$$

From Fig. (b),

$$V_o = [R/(R + R_{Th})]V_{Th} = 1.8 \text{ V}$$

$$R/(R + 37.14) = 1.8/5.143 = 0.35 \text{ or } R = 0.35R + 13 \text{ or } R = (13)/(1–0.35)$$

which leads to R = **20 Ω** (note, this is just for the V_o = 1.8 V)

(b) Asking for the value of R for maximum power would lead to $R = R_{Th}$ = **37.14 Ω**.

However, the problem asks for the value of R for maximum current. This happens when the value of resistance seen by the source is a minimum thus R = 0 is the correct value.

$$I_{max} = V_{Th}/(R_{Th}) = 5.143/(37.14) = \mathbf{138.48\ mA}.$$

www.konkur.in

Chapter 4, Solution 97.

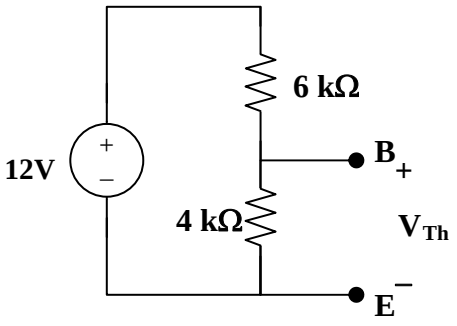

$R_{Th} = R_1 || R_2 = 6||4 =$ **2.4 k ohms**

$V_{Th} = [R_2/(R_1 + R_2)]v_s = [4/(6 + 4)](12) =$ **4.8 V**

Chapter 4, Solution 98.

The 20-ohm, 60-ohm, and 14-ohm resistors form a delta connection which needs to be connected to the wye connection as shown in Fig. (b),

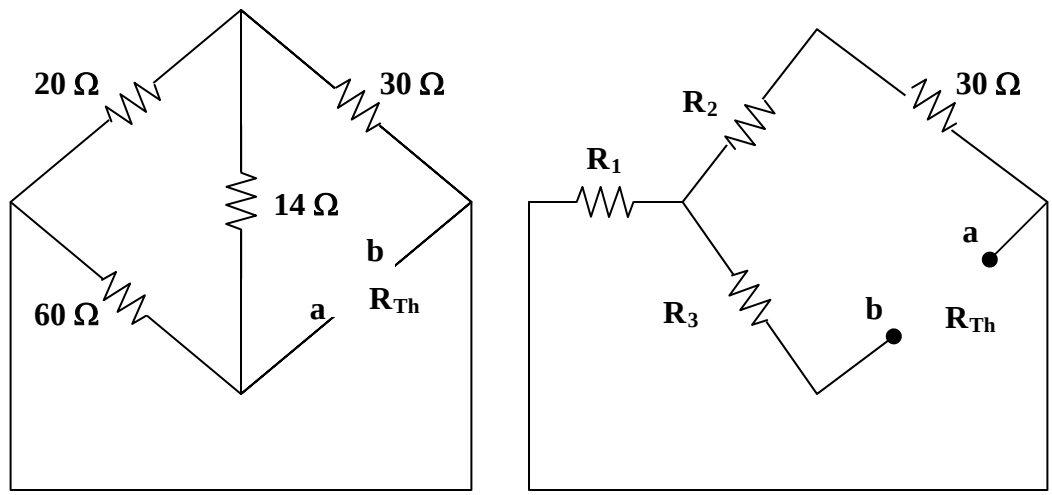

(a) **(b)**

$$R_1 = 20x60/(20 + 60 + 14) = 1200/94 = 12.766 \text{ ohms}$$

$$R_2 = 20x14/94 = 2.979 \text{ ohms}$$

$$R_3 = 60x14/94 = 8.936 \text{ ohms}$$

$$R_{Th} = R_3 + R_1||(R_2 + 30) = 8.936 + 12.766||32.98 = 18.139 \text{ ohms}$$

To find V_{Th}, consider the circuit in Fig. (c).

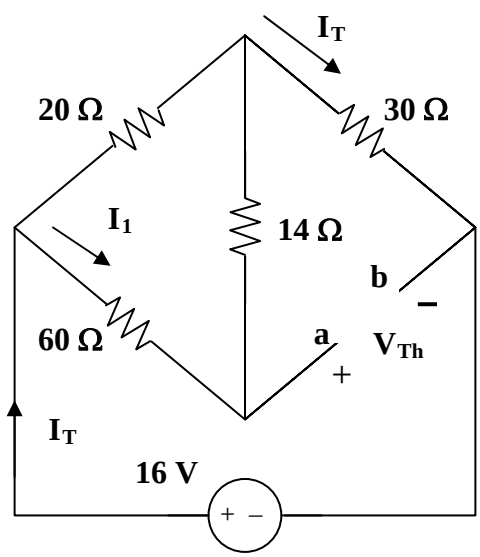

(c)

www.konkur.in

$$I_T = 16/(30 + 15.745) = 349.8 \text{ mA}$$

$$I_1 = [20/(20 + 60 + 14)]I_T = 74.43 \text{ mA}$$

$$V_{Th} = 14I_1 + 30I_T = 11.536 \text{ V}$$

$$I_{40} = V_{Th}/(R_{Th} + 40) = 11.536/(18.139 + 40) = 198.42 \text{ mA}$$

$$P_{40} = I_{40}^2R = \mathbf{1.5748\ watts}$$

www.konkur.in

Chapter 5, Solution 1.

(a) R_{in} = **1.5 MΩ**

(b) R_{out} = **60 Ω**

(c) $A = 8x10^4$

Therefore $A_{dB} = 20 \log 8x10^4$ = **98.06 dB**

www.konkur.in

Chapter 5, Solution 2.

$$v_0 = Av_d = A(v_2 - v_1)$$
$$= 10^5 (20-10) \times 10^{-6} = \mathbf{1V}$$

www.konkur.in

Chapter 5, Solution 3.

$$v_0 = Av_d = A(v_2 - v_1)$$
$$= 2 \times 10^5 (30 + 20) \times 10^{-6} = \mathbf{10V}$$

www.konkur.in

Chapter 5, Solution 4.

$$v_0 = Av_d = A(v_2 - v_1)$$

$$v_2 - v_1 = \frac{v_0}{A} = \frac{-4}{2x10^6} = -2\mu V$$

$v_2 - v_1 = -2\ \mu V = -0.002$ mV

1 mV - v_1 = -0.002 mV

v_1 = **1.002 mV**

www.konkur.in

Chapter 5, Solution 5.

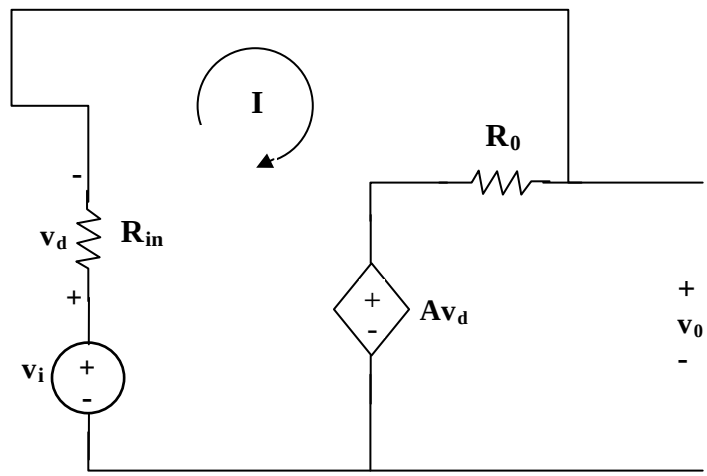

$-v_i + Av_d + (R_i + R_0)\, I = 0$ (1)

But $v_d = R_i I$,

$-v_i + (R_i + R_0 + R_i A)\, I = 0$

$$I = \frac{v_i}{R_0 + (1+A)R_i} \qquad (2)$$

$-Av_d - R_0 I + v_0 = 0$

$$v_0 = Av_d + R_0 I = (R_0 + R_i A)I = \frac{(R_0 + R_i A)v_i}{R_0 + (1+A)R_i}$$

$$\frac{v_0}{v_i} = \frac{R_0 + R_i A}{R_0 + (1+A)R_i} = \frac{100 + 10^4 \text{x} 10^5}{100 + (1+10^5)} \cdot 10^4$$

$$\cong \frac{10^9}{(1+10^5)} \cdot 10^4 = \frac{100{,}000}{100{,}001} = \mathbf{0.9999990}$$

www.konkur.in

Chapter 5, Solution 6.

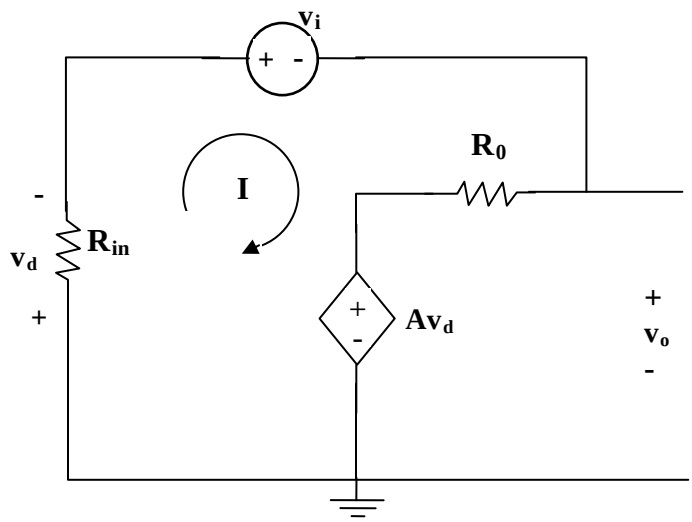

$(R_0 + R_i)R + v_i + Av_d = 0$

But $v_d = R_i I$,

$v_i + (R_0 + R_i + R_i A)I = 0$

$$I = \frac{-v_i}{R_0 + (1+A)R_i} \qquad (1)$$

$-Av_d - R_0 I + v_o = 0$

$v_o = Av_d + R_0 I = (R_0 + R_i A)I$

Substituting for I in (1),

$$v_0 = -\left(\frac{R_0 + R_i A}{R_0 + (1+A)R_i}\right)v_i$$

$$= -\frac{\left(50 + 2x10^6 x2x10^5\right)\cdot 10^{-3}}{50 + \left(1 + 2x10^5\right)x2x10^6}$$

$$\cong \frac{-200{,}000x2x10^6}{200{,}001x2x10^6}\,mV$$

v_0 = **-0.999995 mV**

www.konkur.in

Chapter 5, Solution 7.

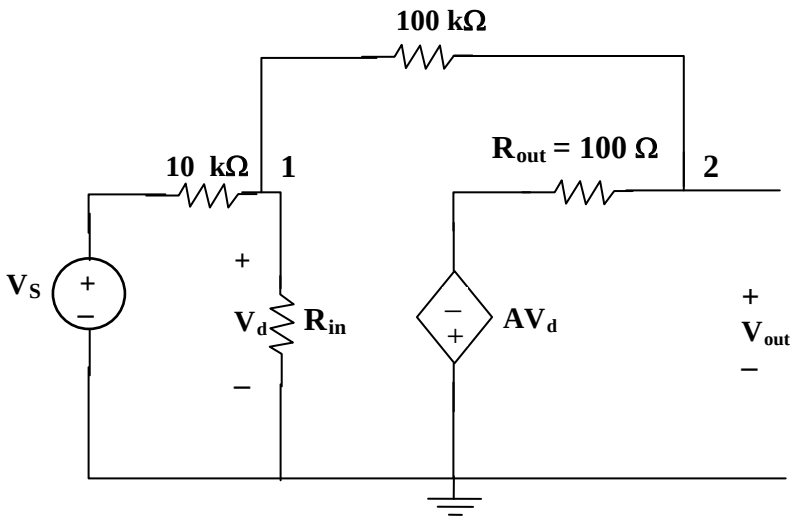

At node 1, $(V_S - V_1)/10\text{ k} = [V_1/100\text{ k}] + [(V_1 - V_0)/100\text{ k}]$

$10\,V_S - 10\,V_1 = V_1 + V_1 - V_0$

which leads to $V_1 = (10V_S + V_0)/12$

At node 2, $(V_1 - V_0)/100\text{ k} = (V_0 - (-AV_d))/100$

But $V_d = V_1$ and $A = 100{,}000$,

$V_1 - V_0 = 1000\,(V_0 + 100{,}000V_1)$

$0 = 1001V_0 + 99{,}999{,}999[(10V_S + V_0)/12]$

$0 = 83{,}333{,}332.5\,V_S + 8{,}334{,}334.25\,V_0$

which gives us $(V_0/V_S) = -10$ (for all practical purposes)

If $V_S = 1$ mV, then V_0 = **–10 mV**

Since $V_0 = A\,V_d = 100{,}000\,V_d$, then $V_d = (V_0/10^5)$ V = **–100 nV**

www.konkur.in

Chapter 5, Solution 8.

(a) If v_a and v_b are the voltages at the inverting and noninverting terminals of the op amp.

$v_a = v_b = 0$

$$1\text{mA} = \frac{0 - v_0}{2\text{k}} \longrightarrow v_0 = \mathbf{-2\ V}$$

(b)

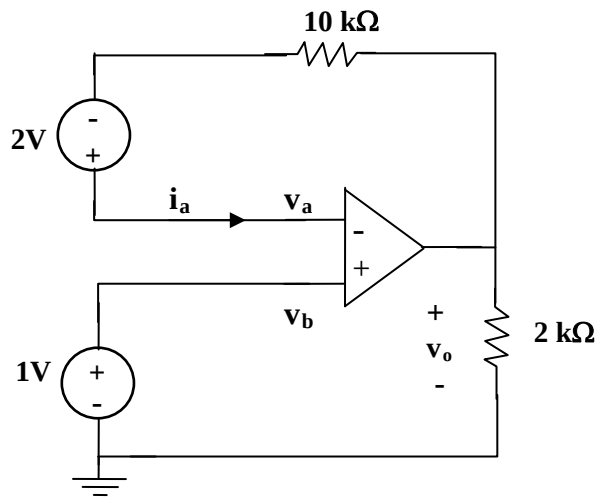

(a)

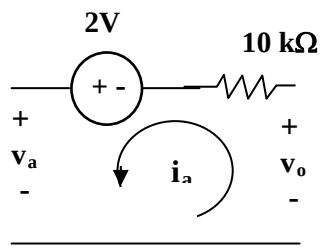

(b)

Since $v_a = v_b = 1\text{V}$ and $i_a = 0$, no current flows through the 10 kΩ resistor. From Fig. (b),

$$-v_a + 2 + v_0 = 0 \longrightarrow v_0 = v_a - 2 = 1 - 2 = \mathbf{-1V}$$

www.konkur.in

Chapter 5, Solution 9.

(a) Let v_a and v_b be respectively the voltages at the inverting and noninverting terminals of the op amp

$$v_a = v_b = 4V$$

At the inverting terminal,

$$1mA = \frac{4 - v_0}{2k} \longrightarrow v_0 = \mathbf{2V}$$

(b)

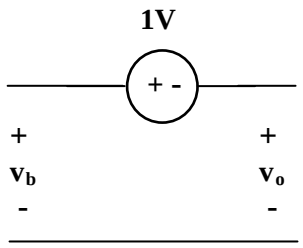

Since $v_a = v_b = 3V$,

$$-v_b + 1 + v_o = 0 \longrightarrow v_o = v_b - 1 = \mathbf{2V}$$

www.konkur.in

Chapter 5, Solution 10.

Since no current enters the op amp, the voltage at the input of the op amp is v_s. Hence

$$v_s = v_o\left(\frac{10}{10+10}\right) = \frac{v_o}{2} \longrightarrow \frac{v_o}{v_s} = \mathbf{2}$$

www.konkur.in

5.11 Using Fig. 5.50, design a problem to help other students to better understand how ideal op amps work.

Although there are many ways to work this problem, this is an example based on the same kind of problem asked in the third edition.

Problem

Find v_o and i_o in the circuit in Fig. 5.50.

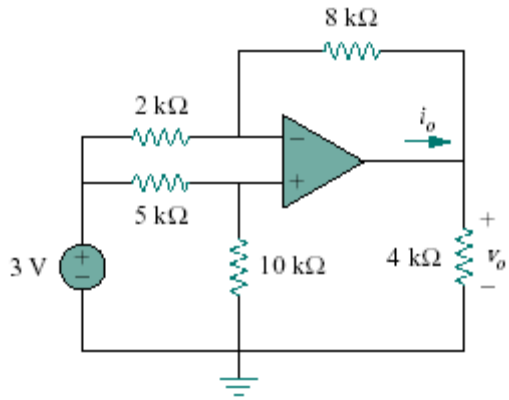

Figure 5.50 for Prob. 5.11

Solution

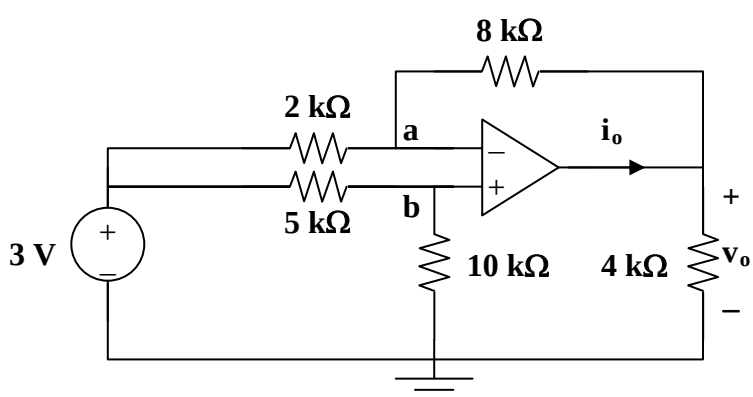

$$v_b = \frac{10}{10+5}(3) = 2\text{V}$$

At node a,

$$\frac{3 - v_a}{2} = \frac{v_a - v_o}{8} \longrightarrow 12 = 5v_a - v_o$$

www.konkur.in

But $v_a = v_b = 2V$,

$$12 = 10 - v_o \longrightarrow v_o = \mathbf{-2V}$$

$$-i_o = \frac{v_a - v_o}{8} + \frac{0 - v_o}{4} = \frac{2+2}{8} + \frac{2}{4} = 1\text{mA}$$

$$i_o = \mathbf{-1mA}$$

www.konkur.in

Chapter 5, Solution 12.

Step 1. Label the unknown nodes in the op amp circuit. Next we write the node equations and then apply the constraint, $V_a = V_b$. Finally, solve for V_o in terms of V_s.

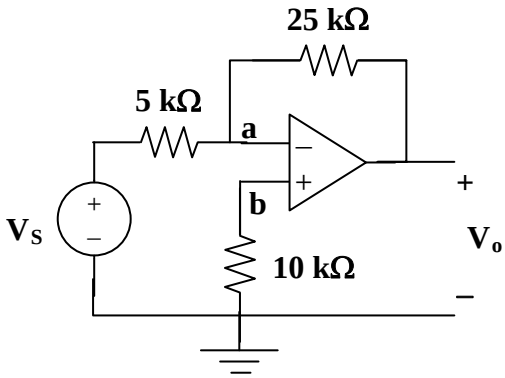

Step 2. $[(V_a-V_s)/5k] + [(V_a-V_o)/25k] + 0 = 0$ and

$[(V_b-0)/10k] + 0 = 0$ or $V_b = 0 = V_a$! Thus,

$[(-V_s)/5k] + [(-V_o)/25k] = 0$ or,

$$V_o = (-25/5)V_s \text{ or } V_o/V_s = \mathbf{-5}.$$

www.konkur.in

Chapter 5, Solution 13.

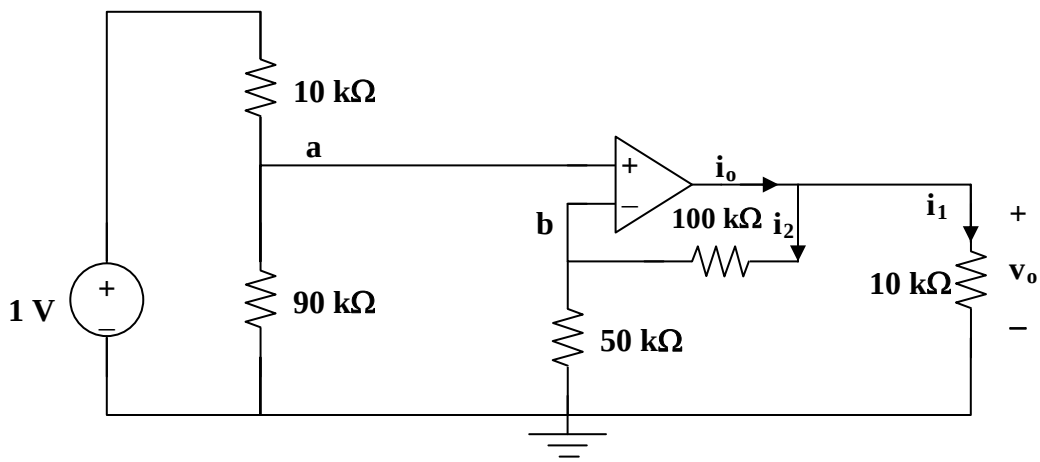

By voltage division,

$$v_a = \frac{90}{100}(1) = 0.9\text{V}$$

$$v_b = \frac{50}{150}v_o = \frac{v_o}{3}$$

But $v_a = v_b \longrightarrow \frac{v_0}{3} = 0.9 \longrightarrow v_o = \mathbf{2.7V}$

$$i_o = i_1 + i_2 = \frac{v_o}{10k} + \frac{v_o}{150k} = 0.27\text{mA} + 0.018\text{mA} = \mathbf{288\ \mu A}$$

www.konkur.in

Chapter 5, Solution 14.

Transform the current source as shown below. At node 1,

$$\frac{10 - v_1}{5} = \frac{v_1 - v_2}{20} + \frac{v_1 - v_o}{10}$$

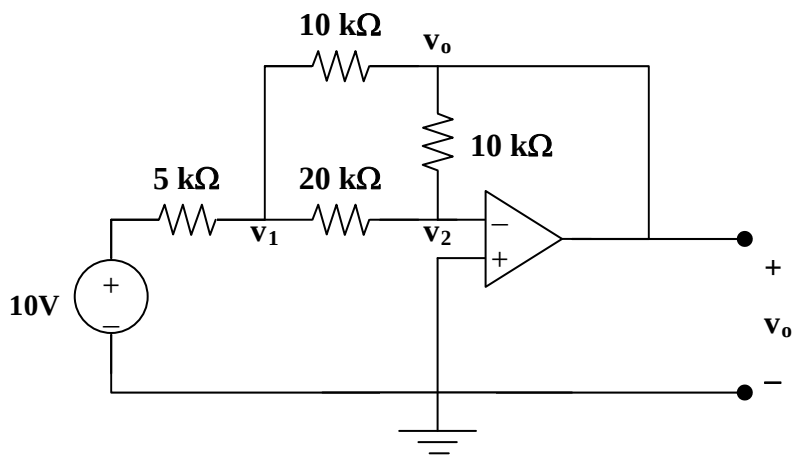

But $v_2 = 0$. Hence $40 - 4v_1 = v_1 + 2v_1 - 2v_o \longrightarrow$ $40 = 7v_1 - 2v_o$ (1)

At node 2, $\frac{v_1 - v_2}{20} = \frac{v_2 - v_o}{10}$, $v_2 = 0$ or $v_1 = -2v_o$ (2)

From (1) and (2), $40 = -14v_o - 2v_o \longrightarrow$ $v_o =$ **–2.5V**

www.konkur.in

Chapter 5, Solution 15

(a) Let v_1 be the voltage at the node where the three resistors meet. Applying KCL at this node gives

$$i_s = \frac{v_1}{R_2} + \frac{v_1 - v_o}{R_3} = v_1\left(\frac{1}{R_2} + \frac{1}{R_3}\right) - \frac{v_o}{R_3} \qquad (1)$$

At the inverting terminal,

$$i_s = \frac{0 - v_1}{R_1} \longrightarrow v_1 = -i_s R_1 \qquad (2)$$

Combining (1) and (2) leads to

$$\boldsymbol{i_s\left(1 + \frac{R_1}{R_2} + \frac{R_1}{R_3}\right) = -\frac{v_o}{R_3} \longrightarrow \underline{\frac{v_o}{i_s} = -\left(R_1 + R_3 + \frac{R_1 R_3}{R_2}\right)}}$$

(b) For this case,

$$\frac{v_o}{i_s} = -\left(20 + 40 + \frac{20x40}{25}\right)\text{k}\Omega = \underline{-92\ \text{k}\Omega}$$

$$= \mathbf{-92\ k\Omega}$$

www.konkur.in

Chapter 5, Solution 16

Using Fig. 5.55, design a problem to help students better understand inverting op amps.

Although there are many ways to work this problem, this is an example based on the same kind of problem asked in the third edition.

Problem

Obtain i_x and i_y in the op amp circuit in Fig. 5.55.

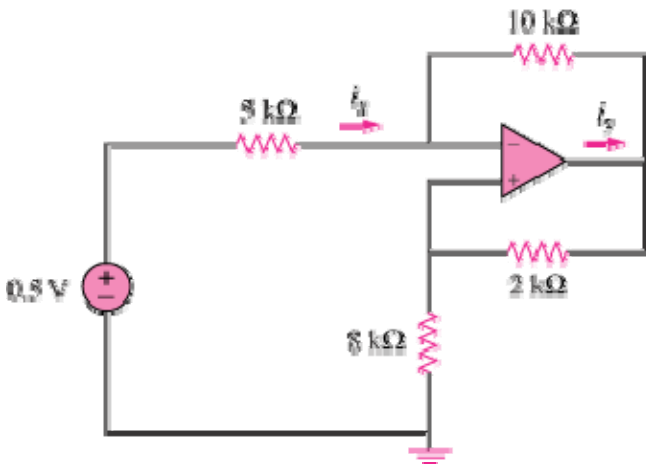

Figure 5.55

Solution

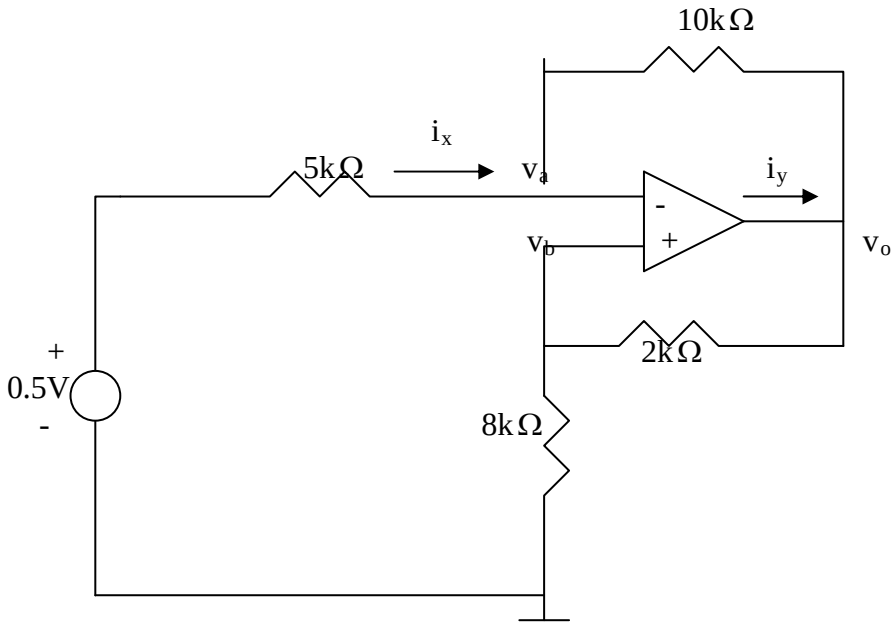

www.konkur.in

Let currents be in mA and resistances be in kΩ. At node a,

$$\frac{0.5 - v_a}{5} = \frac{v_a - v_o}{10} \quad \longrightarrow \quad 1 = 3v_a - v_o \qquad (1)$$

But

$$v_a = v_b = \frac{8}{8+2} v_o \quad \longrightarrow v_o = \frac{10}{8} v_a \qquad (2)$$

Substituting (2) into (1) gives

$$1 = 3v_a - \frac{10}{8} v_a \quad \longrightarrow \quad v_a = \frac{8}{14}$$

Thus,

$$i_x = \frac{0.5 - v_a}{5} = -1/70 \text{ mA} = \underline{-14.28\ \mu\text{A}}$$

$$\boldsymbol{i_y = \frac{v_o - v_b}{2} + \frac{v_o - v_a}{10} = 0.6(v_o - v_a) = 0.6(\frac{10}{8} v_a - v_a) = \frac{0.6}{4} x \frac{8}{14} \text{mA}}$$

$$= \mathbf{85.71\ \mu A}$$

www.konkur.in

Chapter 5, Solution 17.

(a) $$G = \frac{v_o}{v_i} = -\frac{R_f}{R_i} = -\frac{12}{5} = \mathbf{-2.4}$$

(b) $$\frac{v_o}{v_i} = -\frac{80}{5} = \mathbf{-16}$$

(c) $$\frac{v_o}{v_i} = -\frac{2000}{5} = \mathbf{-400}$$

(a) **–2.4**, (b) **–16**, (c) **–400**

www.konkur.in

Chapter 5, Solution 18.

For the circuit, shown in Fig. 5.57, solve for the Thevenin equivalent circuit looking into terminals A and B.

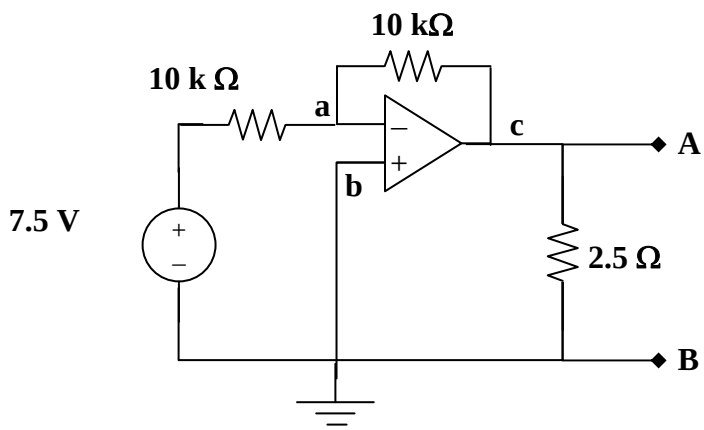

Figure 5.57
For Prob. 5.18.

Write a node equation at a. Since node b is tied to ground, $v_b = 0$. We cannot write a node equation at c, we need to use the constraint equation, $v_a = v_b$. Once, we know v_c, we then proceed to solve for $V_{open\ circuit}$ and $I_{short\ circuit}$. This will lead to $V_{Thev}(t) = V_{open\ circuit}$ and $R_{equivalent} = V_{open\ circuit}/I_{short\ circuit}$.

$$[(v_a - 7.5)/10k] + [(v_a - v_c)/10k] + 0 = 0$$

Our constraint equation leads to,

$$v_a = v_b = 0 \text{ or } v_c = -7.5 \text{ volts}$$

This is also the open circuit voltage (note, the op-amp keeps the output voltage at –5 volts in spite of any connection between A and B. Since this means that even a short from A to B would theoretically then produce an infinite current, $R_{equivalent} = 0$. In real life, the short circuit current will be limited to whatever the op-amp can put out into a short circuited output.

V_{Thev} = **–7.5 volts**; $R_{equivalent}$ = **0-ohms**.

www.konkur.in

Chapter 5, Solution 19.

We convert the current source and back to a voltage source.

$$2\|4 = \frac{4}{3}$$

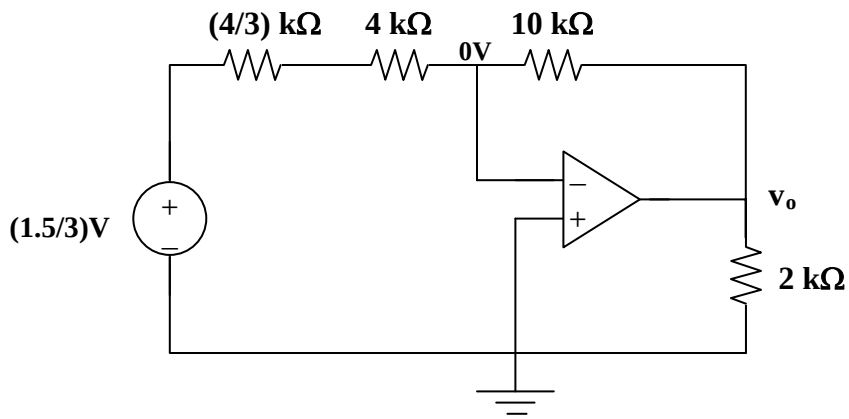

$$v_o = -\frac{10k}{\left(4+\frac{4}{3}\right)k}\left(\frac{1.5}{3}\right) = -937.5 \text{ mV}.$$

$$i_o = \frac{v_o}{2k} + \frac{v_o - 0}{10k} = \textbf{–562.5 μA}.$$

www.konkur.in

Chapter 5, Solution 20.

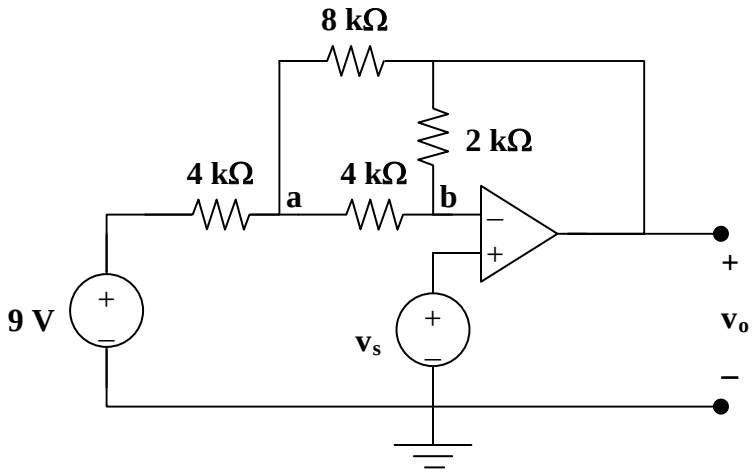

At node a,

$$\frac{9 - v_a}{4} = \frac{v_a - v_o}{8} + \frac{v_a - v_b}{4} \longrightarrow 18 = 5v_a - v_o - 2v_b \qquad (1)$$

At node b,

$$\frac{v_a - v_b}{4} = \frac{v_b - v_o}{2} \longrightarrow v_a = 3v_b - 2v_o \qquad (2)$$

But $v_b = v_s = 2$ V; (2) becomes $v_a = 6 - 2v_o$ and (1) becomes

$-18 = 30 - 10v_o - v_o - 4$ $\qquad$ $v_o = -44/(-11) =$ **4 V**.

www.konkur.in

Chapter 5, Solution 21.

Let the voltage at the input of the op amp be v_a.

$$v_a = 1\,\text{V}, \quad \frac{3-v_a}{4k} = \frac{v_a - v_o}{10k} \quad \longrightarrow \quad \frac{3-1}{4} = \frac{1-v_o}{10}$$

$$v_o = \mathbf{-4\ V}.$$

www.konkur.in

Chapter 5, Solution 22.

$A_v = -R_f/R_i = -15.$

If $R_i = 10k\Omega$, then R_f = **150 kΩ.**

www.konkur.in

Chapter 5, Solution 23

At the inverting terminal, v=0 so that KCL gives

$$\frac{v_s - 0}{R_1} = \frac{0}{R_2} + \frac{0 - v_o}{R_f} \longrightarrow \underline{\frac{v_o}{v_s} = -\frac{R_f}{R_1}}$$

www.konkur.in

Chapter 5, Solution 24

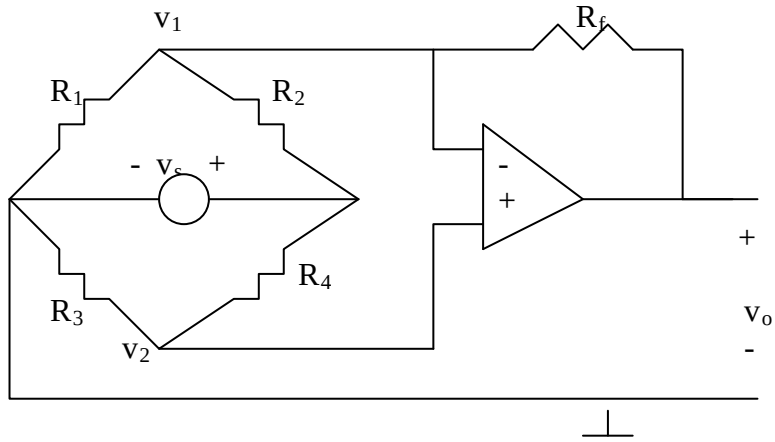

We notice that $v_1 = v_2$. Applying KCL at node 1 gives

$$\frac{v_1}{R_1} + \frac{(v_1 - v_s)}{R_2} + \frac{v_1 - v_o}{R_f} = 0 \quad \longrightarrow \quad \left(\frac{1}{R_1} + \frac{1}{R_2} + \frac{1}{R_f}\right)v_1 - \frac{v_s}{R_2} = \frac{v_o}{R_f} \qquad (1)$$

Applying KCL at node 2 gives

$$\frac{v_1}{R_3} + \frac{v_1 - v_s}{R_4} = 0 \quad \longrightarrow \quad v_1 = \frac{R_3}{R_3 + R_4} v_s \qquad (2)$$

Substituting (2) into (1) yields

$$v_o = R_f \left[\left(\frac{R_3}{R_1} + \frac{R_3}{R_f} - \frac{R_4}{R_2}\right)\left(\frac{R_3}{R_3 + R_4}\right) - \frac{1}{R_2}\right] v_s$$

i.e.

$$\boldsymbol{k = R_f \left[\left(\frac{R_3}{R_1} + \frac{R_3}{R_f} - \frac{R_4}{R_2}\right)\left(\frac{R_3}{R_3 + R_4}\right) - \frac{1}{R_2}\right]}$$

www.konkur.in

Chapter 5, Solution 25.

This is a voltage follower. If v_1 is the output of the op amp,

$v_1 = 3.7$ V

$v_o = [20k/(20k+12k)]v_1 = [20/32]3.7 =$ **2.312 V**.

www.konkur.in

Chapter 5, Solution 26

Using Fig. 5.64, design a problem to help other students better understand noninverting op amps.

Although there are many ways to work this problem, this is an example based on the same kind of problem asked in the third edition.

Problem

Determine $\boldsymbol{i_o}$ in the circuit of Fig. 5.64.

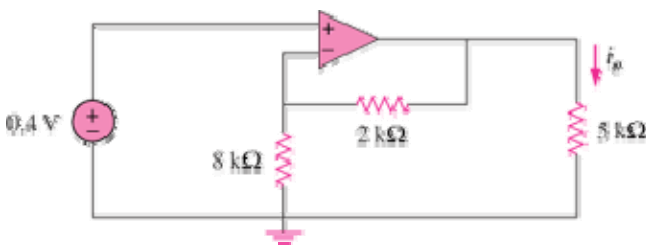

Figure 5.64

Solution

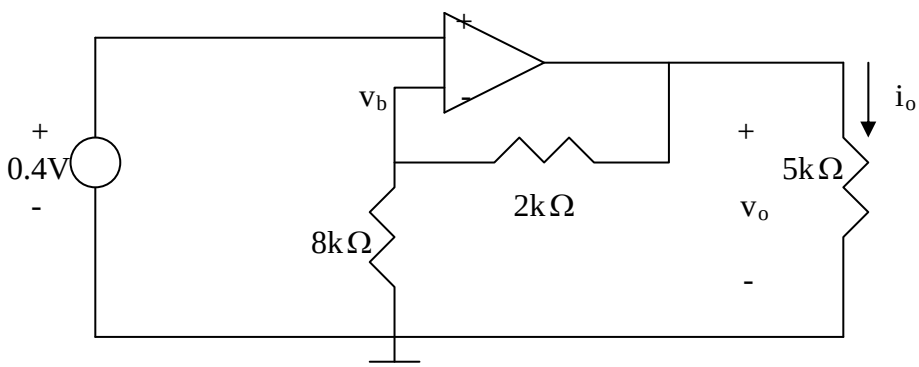

$$v_b = 0.4 = \frac{8}{8+2} v_o = 0.8 v_o \quad \longrightarrow \quad v_o = 0.4/0.8 = 0.5\,\text{V}$$

Hence,

$$\boldsymbol{i_o = \frac{v_o}{5k} = \frac{0.5}{5k} = \underline{0.1\,\text{mA}}}$$

www.konkur.in

Chapter 5, Solution 27.

This is a voltage follower.

$v_1 = [24/(24+16)]7.5 = 4.5$ V; $v_2 = v_1 = 4.5$ V; and

$v_o = [12/(12+8)]4.5 =$ **2.7 V**.

www.konkur.in

Chapter 5, Solution 28.

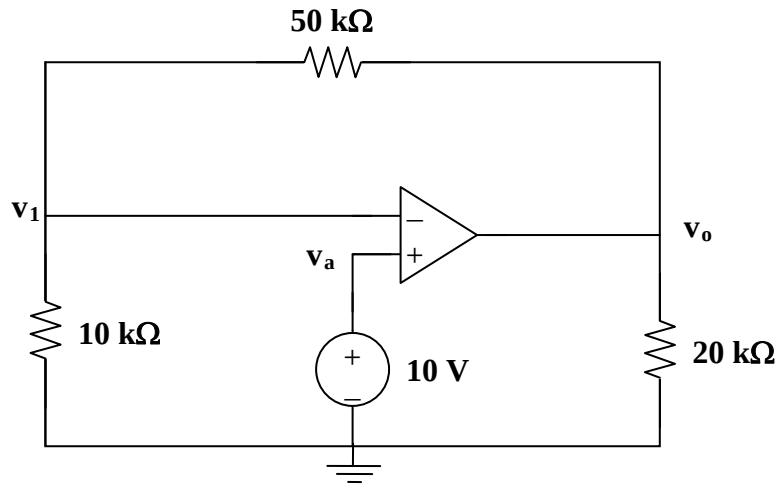

At node 1, $\dfrac{0 - v_1}{10k} = \dfrac{v_1 - v_o}{50k}$

But $v_1 = 10V$,

$-5v_1 = v_1 - v_o$, leads to $v_o = 6v_1 =$ **60V**

Alternatively, viewed as a noninverting amplifier,

$v_o = (1 + (50/10))\ (10V) =$ **60V**

$i_o = v_o/(20k) = 60/(20k) =$ **3 mA**.

www.konkur.in

Chapter 5, Solution 29

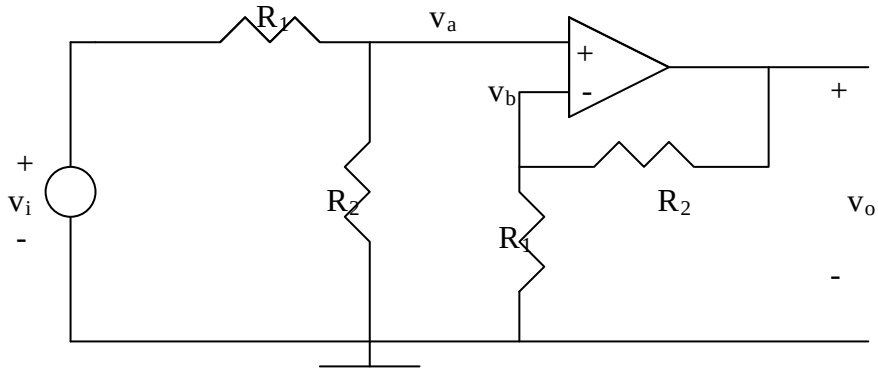

$$v_a = \frac{R_2}{R_1 + R_2} v_i, \qquad v_b = \frac{R_1}{R_1 + R_2} v_o$$

But $v_a = v_b \longrightarrow \frac{R_2}{R_1 + R_2} v_i = \frac{R_1}{R_1 + R_2} v_o$

Or

$$\frac{v_o}{v_i} = \frac{R_2}{R_1}$$

www.konkur.in

Chapter 5, Solution 30.

The output of the voltage becomes

$$v_o = v_i = 1.2 \text{ V}$$
$$(30k \| 20k) = 12k\Omega$$

By voltage division,

$$v_x = \frac{12}{12+60}(1.2) = 0.2V$$

$$i_x = \frac{v_x}{20k} = \frac{0.2}{20k} = \frac{20}{2x10^6} = \mathbf{10\mu A}$$

$$p = \frac{v_x^2}{R} = \frac{0.04}{20k} = \mathbf{2\mu W}.$$

www.konkur.in

Chapter 5, Solution 31.

After converting the current source to a voltage source, the circuit is as shown below:

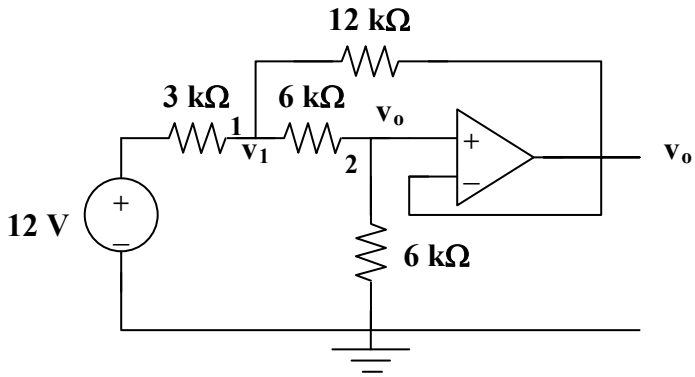

At node 1,

$$\frac{12 - v_1}{3} = \frac{v_1 - v_o}{6} + \frac{v_1 - v_o}{12} \longrightarrow 48 = 7v_1 - 3v_o \qquad (1)$$

At node 2,

$$\frac{v_1 - v_o}{6} = \frac{v_o - 0}{6} = i_x \longrightarrow v_1 = 2v_o \qquad (2)$$

From (1) and (2),

$$v_o = \frac{48}{11}$$

$$i_x = \frac{v_o}{6k} = \mathbf{727.2\mu A}$$

www.konkur.in

Chapter 5, Solution 32.

Let v_x = the voltage at the output of the op amp. The given circuit is a non-inverting amplifier.

$$v_x = \left(1+\frac{50}{10}\right)(4\text{ mV}) = 24\text{ mV}$$

$$60\|30 = 20\text{k}\Omega$$

By voltage division,

$$v_o = \frac{20}{20+20}v_x = \frac{v_x}{2} = 12\text{mV}$$

$$i_x = \frac{v_x}{(20+20)\text{k}} = \frac{24\text{mV}}{40\text{k}} = \mathbf{600\ \eta A}$$

$$p = \frac{v_o^2}{R} = \frac{144\text{x}10^{-6}}{60\text{x}10^3} = \mathbf{204\ \eta W}.$$

www.konkur.in

Chapter 5, Solution 33.

After transforming the current source, the current is as shown below:

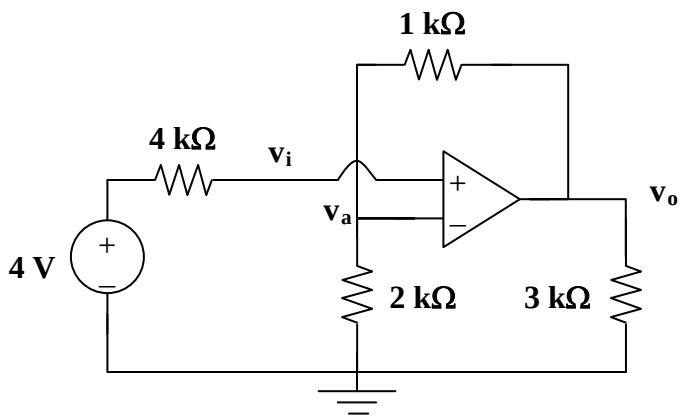

This is a noninverting amplifier.

$$v_o = \left(1 + \frac{1}{2}\right)v_i = \frac{3}{2}v_i$$

Since the current entering the op amp is 0, the source resistor has a 0 V potential drop. Hence v_i = 4V.

$$v_o = \frac{3}{2}(4) = 6\text{V}$$

Power dissipated by the 3kΩ resistor is

$$\frac{v_o^2}{R} = \frac{36}{3k} = \mathbf{12mW}$$

$$i_x = \frac{v_a - v_o}{R} = \frac{4-6}{1k} = \mathbf{-2mA}.$$

12mW, –2mA

www.konkur.in

Chapter 5, Solution 34

$$\frac{v_1 - v_{in}}{R_1} + \frac{v_1 - v_{in}}{R_2} = 0 \qquad (1)$$

but

$$v_a = \frac{R_3}{R_3 + R_4} v_o \qquad (2)$$

Combining (1) and (2),

$$v_1 - v_a + \frac{R_1}{R_2} v_2 - \frac{R_1}{R_2} v_a = 0$$

$$v_a\left(1 + \frac{R_1}{R_2}\right) = v_1 + \frac{R_1}{R_2} v_2$$

$$\frac{R_3 v_o}{R_3 + R_4}\left(1 + \frac{R_1}{R_2}\right) = v_1 + \frac{R_1}{R_2} v_2$$

$$v_o = \frac{R_3 + R_4}{R_3\left(1 + \frac{R_1}{R_2}\right)}\left(v_1 + \frac{R_1}{R_2} v_2\right)$$

$$v_O = \underline{\frac{\boldsymbol{R_3 + R_4}}{\boldsymbol{R_3(R_1 + R_2)}}(\boldsymbol{v_1 R_2 + v_2})}$$

www.konkur.in

Chapter 5, Solution 35.

$$A_v = \frac{v_o}{v_i} = 1 + \frac{R_f}{R_i} = 7.5 \longrightarrow R_f = 6.5R_i$$

If R_i = **60 kΩ**, R_f = **390 kΩ**.

www.konkur.in

Chapter 5, Solution 36

$$V_{Th} = V_{ab}$$

But $\quad v_s = \dfrac{R_1}{R_1 + R_2} V_{ab}$. Thus,

$$V_{Th} = V_{ab} = \frac{R_1 + R_2}{R_1} v_s = \underline{(1 + \frac{R_2}{R_1}) v_s}$$

To get R_{Th}, apply a current source I_o at terminals a-b as shown below.

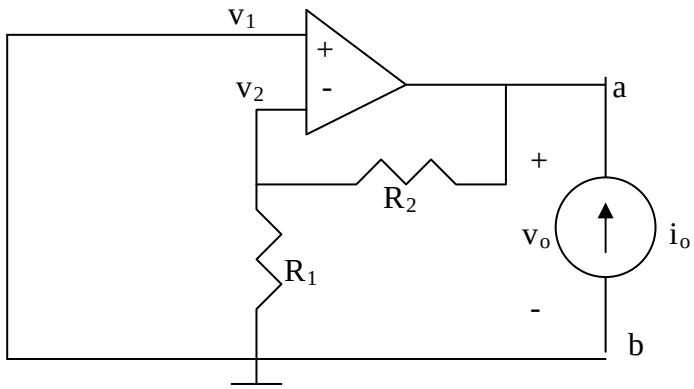

Since the noninverting terminal is connected to ground, $v_1 = v_2 = 0$, i.e. no current passes through R_1 and consequently R_2. Thus, $v_o = 0$ and

$$\underline{\boldsymbol{R_{Th} = \frac{v_o}{i_o} = 0}}$$

www.konkur.in

Chapter 5, Solution 37.

$$v_o = -\left[\frac{R_f}{R_1}v_1 + \frac{R_f}{R_2}v_2 + \frac{R_f}{R_3}v_3\right]$$

$$= -\left[\frac{30}{10}(2) + \frac{30}{20}(-2) + \frac{30}{30}(-4.5)\right]$$

v_o = **1.5 V**.

www.konkur.in

Chapter 5, Solution 38.

Using Fig. 5.75, design a problem to help other students better understand summing amplifiers.

Although there are many ways to work this problem, this is an example based on the same kind of problem asked in the third edition.

Problem

Calculate the output voltage due to the summing amplifier shown in Fig. 5.75.

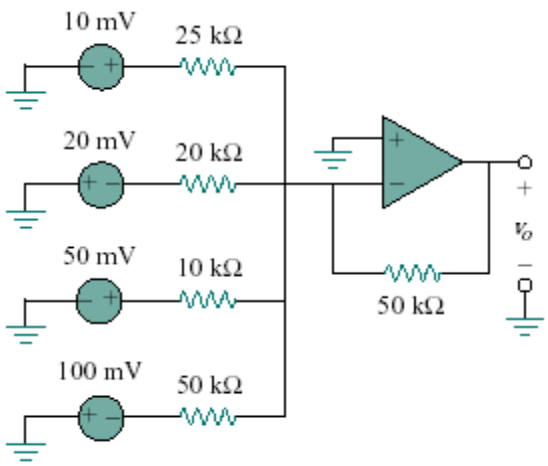

Figure 5.75

Solution

$$v_o = -\left[\frac{R_f}{R_1}v_1 + \frac{R_f}{R_2}v_2 + \frac{R_f}{R_3}v_3 + \frac{R_f}{R_4}v_4\right]$$

$$= -\left[\frac{50}{25}(10) + \frac{50}{20}(-20) + \frac{50}{10}(50) + \frac{50}{50}(-100)\right]$$

$$= \mathbf{-120mV}$$

www.konkur.in

Chapter 5, Solution 39

This is a summing amplifier.

$$v_o = -\left(\frac{R_f}{R_1}v_1 + \frac{R_f}{R_2}v_2 + \frac{R_f}{R_3}v_3\right) = -\left(\frac{50}{10}(2) + \frac{50}{20}v_2 + \frac{50}{50}(-1)\right) = -9 - 2.5v_2$$

Thus,

$$\boldsymbol{v_o = -16.5 = -9 - 2.5v_2} \longrightarrow \underline{\boldsymbol{v_2 = 3\ \mathrm{V}}}$$

www.konkur.in

Chapter 5, Solution 40

Determine V_o in terms of V_1 and V_2.

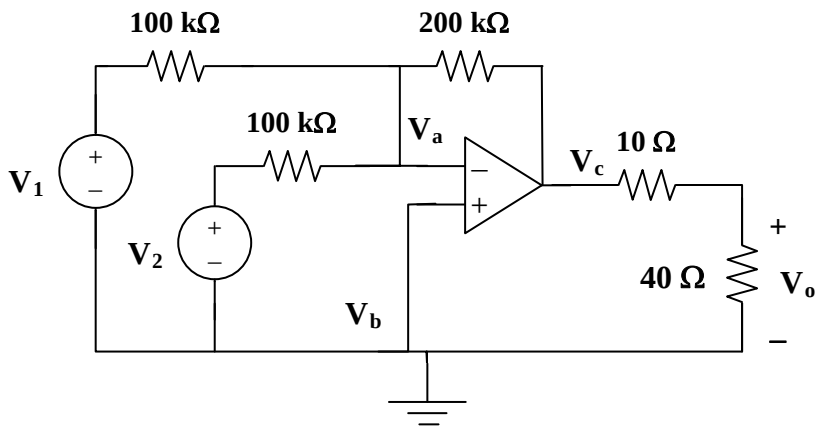

Step 1. Label the reference and node voltages in the circuit, see above. Note we now can consider nodes a and b, we cannot write a node equation at c without introducing another unknown. The node equation at a is $[(V_a–V_1)/10^5] + [(V_a–V_2)/10^5] + 0 + [(V_a–V_c)/2x10^5] = 0$. At b it is clear that $V_b = 0$. Since we have two equations and three unknowns, we need another equation. We do get that from the constraint equation, $V_a = V_b$. After we find V_c in terms of V_1 and V_2, we then can determine V_o which is equal to $[(V_c–0)/50]$ times 40.

Step 2. Letting $V_a = V_b = 0$, the first equation can be simplified to,

$$[–V_1/10^5] + [–V_2/10^5] + [–V_c/2x10^5] = 0$$

Taking V_c to the other side of the equation and multiplying everything by $2x10^5$, we get,

$$V_c = –2V_1 – 2V_2$$

Now we can find V_o which is equal to $(40/50)V_c = 0.8[–2V_1–2V_2]$

$$V_o = \mathbf{–1.6V_1–1.6V_2}.$$

www.konkur.in

Chapter 5, Solution 41.

$$R_f/R_i = 1/(4) \longrightarrow R_i = 4R_f = 40k\Omega$$

The averaging amplifier is as shown below:

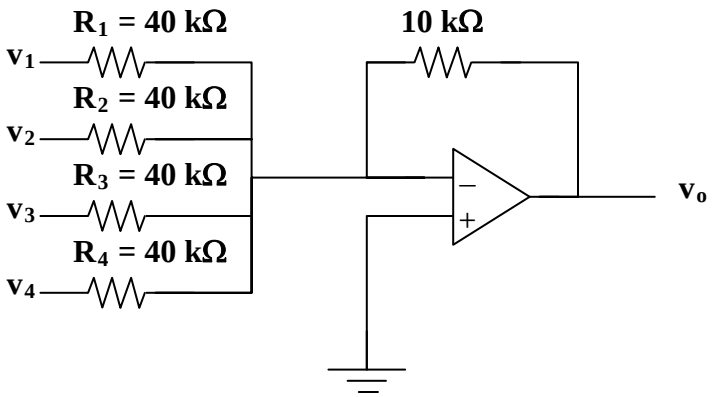

www.konkur.in

Chapter 5, Solution 42

Since the average of three numbers is the sum of those numbers divided by three, the value of the feedback resistor needs to be equal to one-third of the input resistors or,

$$R_f = \frac{1}{3}R_1 = \mathbf{25\ k\Omega}.$$

www.konkur.in

Chapter 5, Solution 43.

In order for

$$v_o = \left(\frac{R_f}{R_1} v_1 + \frac{R_f}{R_2} v_2 + \frac{R_f}{R_3} v_3 + \frac{R_f}{R_4} v_4 \right)$$

to become

$$v_o = -\frac{1}{4}\left(v_1 + v_2 + v_3 + v_4\right)$$

$$\frac{R_f}{R_i} = \frac{1}{4} \longrightarrow R_f = \frac{R_i}{4} = \frac{80\text{k}\Omega}{4} = \mathbf{20\ k\Omega}.$$

www.konkur.in

Chapter 5, Solution 44.

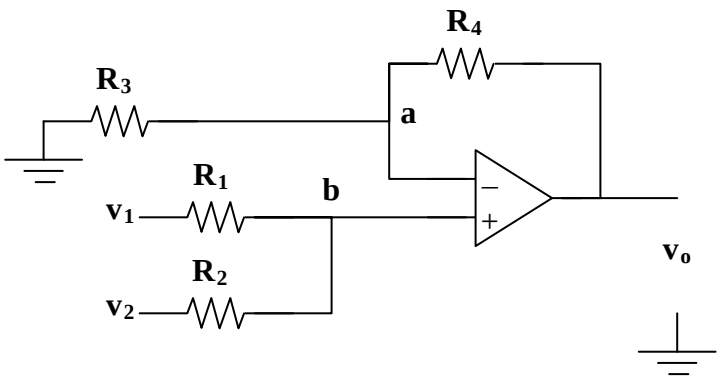

At node b, $\dfrac{v_b - v_1}{R_1} + \dfrac{v_b - v_2}{R_2} = 0 \longrightarrow v_b = \dfrac{\dfrac{v_1}{R_1} + \dfrac{v_2}{R_2}}{\dfrac{1}{R_1} + \dfrac{1}{R_2}}$ (1)

At node a, $\dfrac{0 - v_a}{R_3} = \dfrac{v_a - v_o}{R_4} \longrightarrow v_a = \dfrac{v_o}{1 + R_4 / R_3}$ (2)

But $v_a = v_b$. We set (1) and (2) equal.

$$\frac{v_o}{1 + R_4 / R_3} = \frac{R_2 v_1 + R_1 v_2}{R_1 + R_2}$$

or

$$v_o = \frac{(R_3 + R_4)}{R_3 (R_1 + R_2)} (R_2 v_1 + R_1 v_2)$$

www.konkur.in

Chapter 5, Solution 45.

This can be achieved as follows:

$$v_o = -\left[\frac{R}{R/3}(-v_1) + \frac{R}{R/2}v_2\right]$$

$$= -\left[\frac{R_f}{R_1}(-v_1) + \frac{R_f}{R_2}v_2\right]$$

i.e. $R_f = R$, $R_1 = R/3$, and $R_2 = R/2$

Thus we need an inverter to invert v_1, and a summer, as shown below ($R<100k\Omega$).

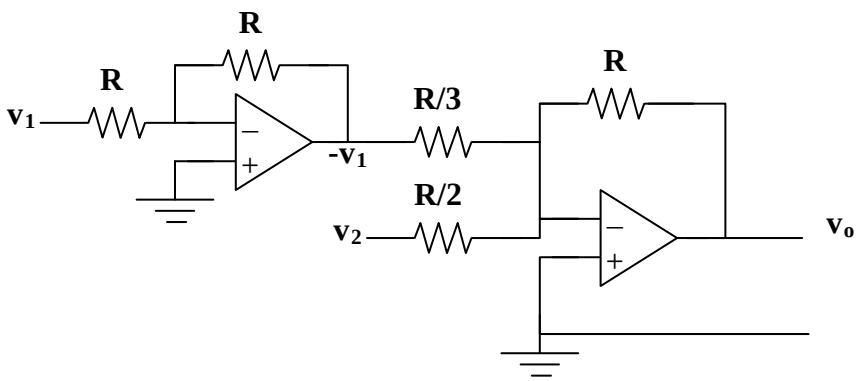

www.konkur.in

Chapter 5, Solution 46.

$$-v_o = \frac{v_1}{3} + \frac{1}{3}(-v_2) + \frac{1}{2}v_3 = \frac{R_f}{R_1}v_1 + \frac{R_x}{R_2}(-v_2) + \frac{R_f}{R_3}v_3$$

i.e. $R_3 = 2R_f$, $R_1 = R_2 = 3R_f$. To get $-v_2$, we need an inverter with $R_f = R_i$. If $R_f = 10k\Omega$, a solution is given below.

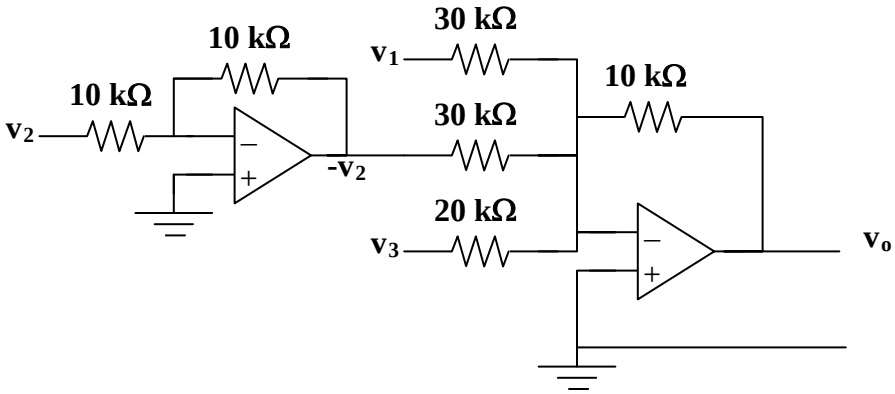

www.konkur.in

Chapter 5, Solution 47.

Using eq. (5.18), $R_1 = 2k\Omega,\ R_2 = 30k\Omega,\ R_3 = 2k\Omega,\ R_4 = 20k\Omega$

$$v_o = \frac{30(1+2/30)}{2(1+2/20)}v_2 - \frac{30}{2}V_1 = \frac{32}{2.2}(2) - 15(1) = \underline{14.09\ \text{V}}$$

= **14.09 V**.

www.konkur.in

Chapter 5, Solution 48.

We can break this problem up into parts. The 5 mV source separates the lower circuit from the upper. In addition, there is no current flowing into the input of the op amp which means we now have the 40-kohm resistor in series with a parallel combination of the 60-kohm resistor and the equivalent 100-kohm resistor.

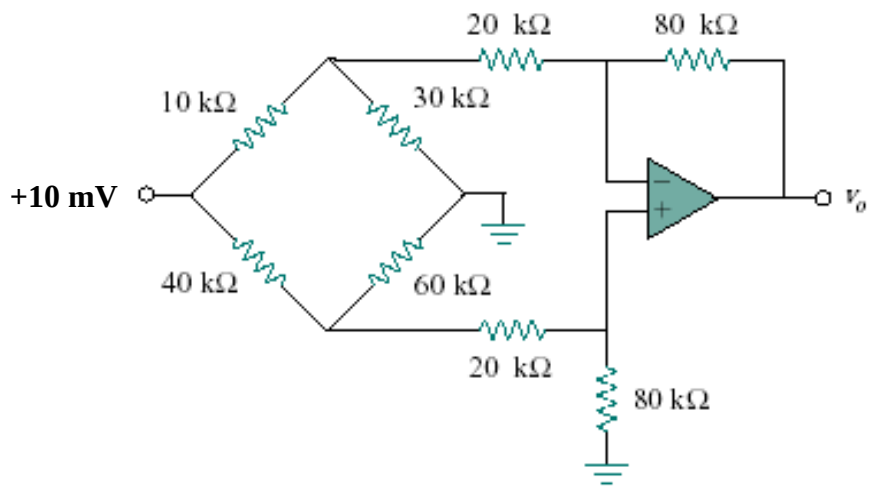

Thus, 40k + (60x100k)/(160) = 77.5k

which leads to the current flowing through this part of the circuit,

$$i = 10\text{ m}/77.5\text{k} = 129.03\text{x}10^{-9}\text{ A}$$

The voltage across the 60k and equivalent 100k is equal to,

$$v = i\text{x}37.5\text{k} = 4.839\text{ mV}$$

We can now calculate the voltage across the 80-kohm resistor.

$$v_{80} = 0.8\text{x}4.839\text{ m} = 3.87\text{ mV}$$

which is also the voltage at both inputs of the op amp and the voltage between the 20-kohm and 80-kohm resistors in the upper circuit. Let v_1 be the voltage to the left of the 20-kohm resistor of the upper circuit and we can write a node equation at that node.

www.konkur.in

$$(v_1 - 10m)/(10k) + v_1/30k + (v_1 - 3.87m)/20k = 0$$

or $$6v_1 - 60m + 2v_1 + 3v_1 - 11.61m = 0$$

or $$v_1 = 71.61/11 = 6.51 \text{ mV}.$$

The current through the 20k-ohm resistor, left to right, is,

$$i_{20} = (6.51m - 3.87m)/20k = 132 \times 10^{-9} \text{ A}$$

thus, $$v_o = 3.87m - 132 \times 10^{-9} \times 80k = \mathbf{-6.69\ mV}.$$

www.konkur.in

Chapter 5, Solution 49.

$R_1 = R_3 = 20k\Omega$, $R_2/(R_1) = 4$

i.e. $R_2 = 4R_1 = 80k\Omega = R_4$

Verify: $$v_o = \frac{R_2}{R_1}\frac{1+R_1/R_2}{1+R_3/R_4}v_2 - \frac{R_2}{R_1}v_1$$

$$= 4\frac{(1+0.25)}{1+0.25}v_2 - 4v_1 = 4(v_2 - v_1)$$

Thus, $R_1 = R_3 =$ **20 kΩ**, $R_2 = R_4 =$ **80 kΩ**.

www.konkur.in

Chapter 5, Solution 50.

(a) We use a difference amplifier, as shown below:

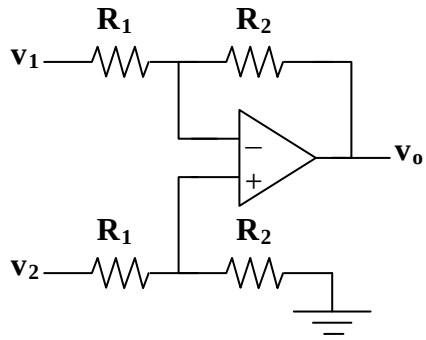

$$v_o = \frac{R_2}{R_1}(v_2 - v_1) = 2.5(v_2 - v_1), \text{ i.e. } R_2/R_1 = 2.5$$

If R_1 = **100 kΩ** then R_2 = **250kΩ**

(b) We may apply the idea in Prob. 5.35.

$$v_0 = 2.5v_1 - 2.5v_2$$
$$= -\left[\frac{R}{R/2}(-v_1) + \frac{R}{R/2}v_2\right]$$
$$= -\left[\frac{R_f}{R_1}(-v_1) + \frac{R_f}{R_2}v_2\right]$$

i.e. $R_f = R$, $R_1 = R/2.5 = R_2$

We need an inverter to invert v_1 and a summer, as shown below. We may let R = 100 kΩ.

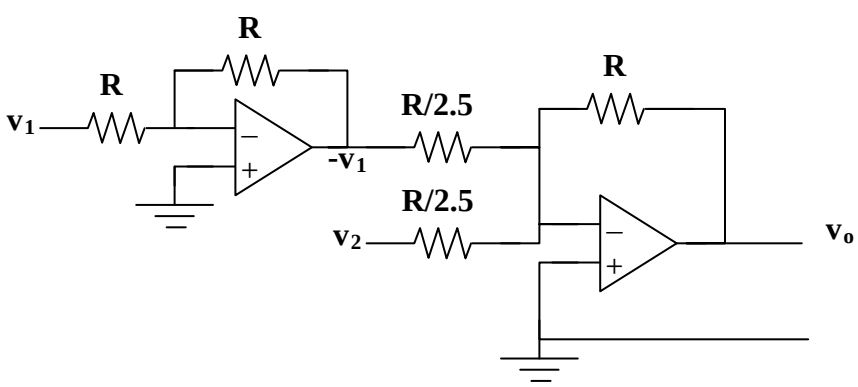

www.konkur.in

Chapter 5, Solution 51.

We achieve this by cascading an inverting amplifier and two-input inverting summer as shown below:

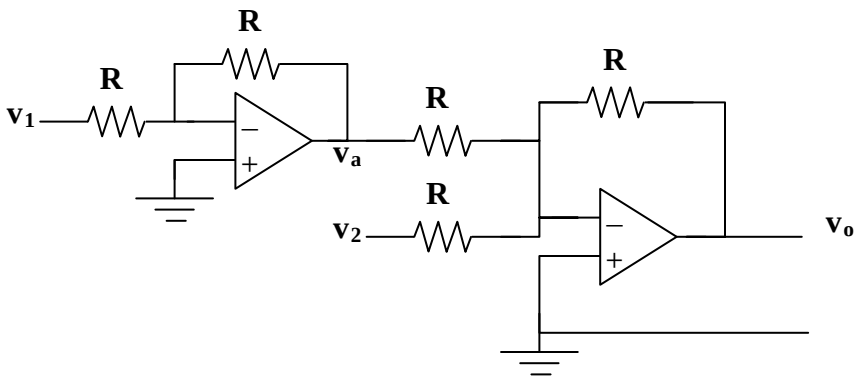

Verify:

$v_o = -v_a - v_2$

But $v_a = -v_1$. Hence

$v_o = v_1 - v_2$.

www.konkur.in

Chapter 5, Solution 52

Design an op amp circuit such that

$v_o = 4v_1 + 6v_2 - 3v_3 - 5v_4$

Let all the resistors be in the range of 20 to 200 kΩ.

Solution

A summing amplifier shown below will achieve the objective. An inverter is inserted to invert v_2. Since the smallest resistance must be at least 20 kΩ, then let R/6 = 20kΩ therefore let R = **120 kΩ**.

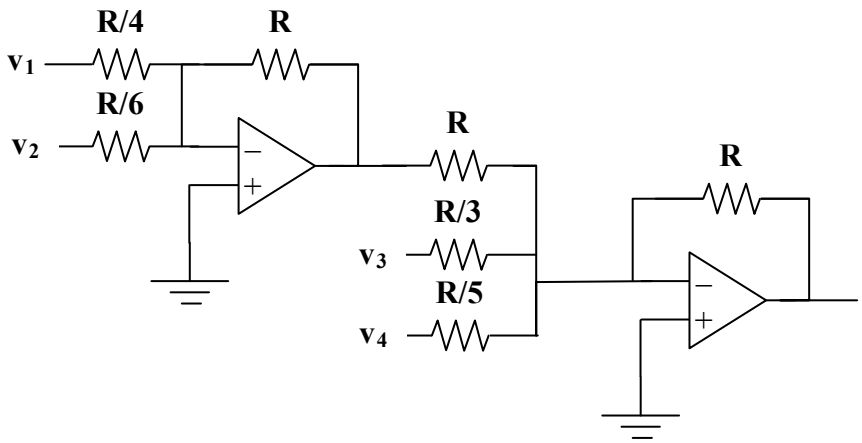

www.konkur.in

Chapter 5, Solution 53.

(a)

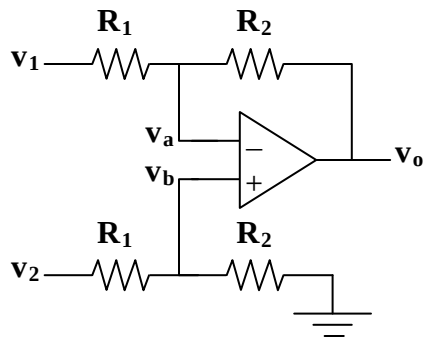

At node a,

$$\frac{v_1 - v_a}{R_1} = \frac{v_a - v_o}{R_2} \longrightarrow v_a = \frac{R_2 v_1 + R_1 v_o}{R_1 + R_2} \qquad (1)$$

At node b, $$v_b = \frac{R_2}{R_1 + R_2} v_2 \qquad (2)$$

But $v_a = v_b$. Setting (1) and (2) equal gives

$$\frac{R_2}{R_1 + R_2} v_2 = \frac{R_2 v_1 + R_1 v_o}{R_1 + R_2}$$

$$v_2 - v_1 = \frac{R_1}{R_2} v_o = v_i$$

$$\frac{v_o}{v_i} = \underline{\frac{R_2}{R_1}}$$

(b)

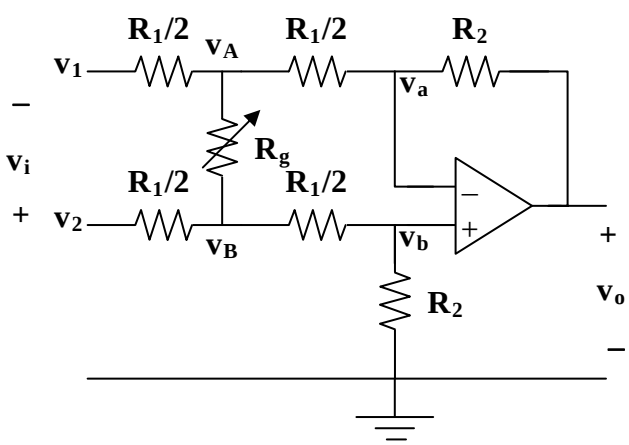

www.konkur.in

At node A, $$\frac{v_1 - v_A}{R_1/2} + \frac{v_B - v_A}{R_g} = \frac{v_A - v_a}{R_1/2}$$

or $$v_1 - v_A + \frac{R_1}{2R_g}(v_B - v_A) = v_A - v_a \qquad (1)$$

At node B, $$\frac{v_2 - v_B}{R_1/2} = \frac{v_B - v_A}{R_1/2} + \frac{v_B - v_b}{R_g}$$

or $$v_2 - v_B - \frac{R_1}{2R_g}(v_B - v_A) = v_B - v_b \qquad (2)$$

Subtracting (1) from (2),

$$v_2 - v_1 - v_B + v_A - \frac{2R_1}{2R_g}(v_B - v_A) = v_B - v_A - v_b + v_a$$

Since, $v_a = v_b$,

$$\frac{v_2 - v_1}{2} = \left(1 + \frac{R_1}{2R_g}\right)(v_B - v_A) = \frac{v_i}{2}$$

or $$v_B - v_A = \frac{v_i}{2} \cdot \frac{1}{1 + \frac{R_1}{2R_g}} \qquad (3)$$

But for the difference amplifier,

$$v_o = \frac{R_2}{R_1/2}(v_B - v_A)$$

or $$v_B - v_A = \frac{R_1}{2R_2} v_o \qquad (4)$$

Equating (3) and (4), $$\frac{R_1}{2R_2} v_o = \frac{v_i}{2} \cdot \frac{1}{1 + \frac{R_1}{2R_g}}$$

$$\frac{v_o}{v_i} = \frac{R_2}{R_1} \cdot \frac{1}{1 + \frac{R_1}{2R_g}}$$

www.konkur.in

(c) At node a, $$\frac{v_1 - v_a}{R_1} = \frac{v_a - v_A}{R_2/2}$$

$$v_1 - v_a = \frac{2R_1}{R_2} v_a - \frac{2R_1}{R_2} v_A \qquad (1)$$

At node b, $$v_2 - v_b = \frac{2R_1}{R_2} v_b - \frac{2R_1}{R_2} v_B \qquad (2)$$

Since $v_a = v_b$, we subtract (1) from (2),

$$v_2 - v_1 = \frac{-2R_1}{R_2}(v_B - v_A) = \frac{v_i}{2}$$

or $$v_B - v_A = \frac{-R_2}{2R_1} v_i \qquad (3)$$

At node A,

$$\frac{v_a - v_A}{R_2/2} + \frac{v_B - v_A}{R_g} = \frac{v_A - v_o}{R/2}$$

$$v_a - v_A + \frac{R_2}{2R_g}(v_B - v_A) = v_A - v_o \qquad (4)$$

At node B, $$\frac{v_b - v_B}{R/2} - \frac{v_B - v_A}{R_g} = \frac{v_B - 0}{R/2}$$

$$v_b - v_B - \frac{R_2}{2R_g}(v_B - v_A) = v_B \qquad (5)$$

Subtracting (5) from (4),

$$v_B - v_A + \frac{R_2}{R_g}(v_B - v_A) = v_A - v_B - v_o$$

$$2(v_B - v_A)\left(1 + \frac{R_2}{2R_g}\right) = -v_o \qquad (6)$$

Combining (3) and (6),

$$\frac{-R_2}{R_1} v_i \left(1 + \frac{R_2}{2R_g}\right) = -v_o$$

$$\boldsymbol{\frac{v_o}{v_i} = \frac{R_2}{R_1}\left(1 + \frac{R_2}{2R_g}\right)}$$

www.konkur.in

Chapter 5, Solution 54.

The first stage is a summer (please note that we let the output of the first stage be v_1).

$$v_1 = -\left(\frac{R}{R}v_s + \frac{R}{R}v_o\right) = -v_s - v_o$$

The second stage is a noninverting amplifier

$$v_o = (1 + R/R)v_1 = 2v_1 = 2(-v_s - v_o) \text{ or } 3v_o = -2v_s$$

$$v_o/v_s = \mathbf{-0.6667}.$$

www.konkur.in

Chapter 5, Solution 55.

Let $A_1 = k$, $A_2 = k$, and $A_3 = k/(4)$

$A = A_1A_2A_3 = k^3/(4)$

$20\text{Log}_{10}A = 42$

$\text{Log}_{10}A = 2.1 \longrightarrow A = 10^{2.1} = 125.89$

$k^3 = 4A = 503.57$

$k = \sqrt[3]{503.57} = 7.956$

Thus

$A_1 = A_2 =$ **7.956**, $A_3 =$ **1.989**

www.konkur.in

Chapter 5, Solution 56.

Using Fig. 5.83, design a problem to help other students better understand cascaded op amps.

Although there are many ways to work this problem, this is an example based on the same kind of problem asked in the third edition.

Problem

Calculate the gain of the op amp circuit shown in Fig. 5.83.

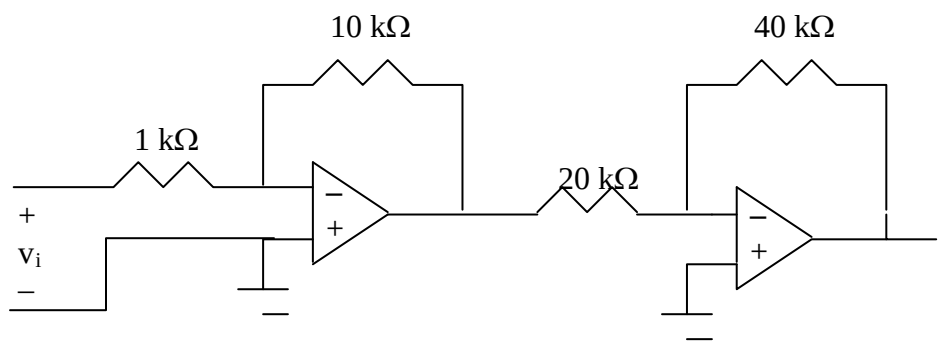

Figure 5.83 For Prob. 5.56.

Solution

Each stage is an inverting amplifier. Hence,

$$\frac{v_o}{v_s} = (-\frac{10}{1})(-\frac{40}{20}) = \underline{20}$$

www.konkur.in

Chapter 5, Solution 57.

Let v_1 be the output of the first op amp and v_2 be the output of the second op amp.

The first stage is an inverting amplifier.

$$v_1 = -\frac{50}{25} v_{s1} = -2v_{s1}$$

The second state is a summer.

$$v_2 = -(100/50)v_{s2} - (100/100)v_1 = -2v_{s2} + 2v_{s1}$$

The third state is a noninverting amplifier

$$v_o = (1 + \frac{100}{50})v_2 = 3v_2 = \underline{6v_{s1} - 6v_{s2}}$$

www.konkur.in

Chapter 5, Solution 58.

Looking at the circuit, the voltage at the right side of the 5-kΩ resistor must be at 0V if the op amps are working correctly. Thus the 1-kΩ is in series with the parallel combination of the 3-kΩ and the 5-kΩ. By voltage division, the input to the voltage follower is:

$$v_1 = \frac{3\|5}{1+3\|5}(0.6) = 0.3913\text{V} = \text{to the output of the first op amp.}$$

Thus,

$$v_o = -10((0.3913/5)+(0.3913/2)) = -2.739 \text{ V}.$$

$$i_o = \frac{0 - v_o}{4k} = \mathbf{684.8\ \mu A}.$$

www.konkur.in

Chapter 5, Solution 59.

The first stage is a noninverting amplifier. If v_1 is the output of the first op amp,

$$v_1 = (1 + 2R/R)v_s = 3v_s$$

The second stage is an inverting amplifier

$$v_o = -(4R/R)v_1 = -4v_1 = -4(3v_s) = -12v_s$$

$$v_o/v_s = \mathbf{-12}.$$

www.konkur.in

Chapter 5, Solution 60.

The first stage is a summer. Let V_1 be the output of the first stage.

$$v_1 = -\frac{10}{5}v_i - \frac{10}{4}v_o \longrightarrow v_1 = -2v_i - 2.5v_o \qquad (1)$$

By voltage division,

$$v_1 = \frac{10}{10+2}v_o = \frac{5}{6}v_o \qquad (2)$$

Combining (1) and (2),

$$\frac{5}{6}v_o = -2v_1 - 2.5v_0 \longrightarrow \frac{10}{3}v_0 = -2v_i$$

$$\frac{v_o}{v_i} = -6/10 = \underline{-0.6}$$

www.konkur.in

Chapter 5, Solution 61.

The first op amp is an inverter. If v_1 is the output of the first op amp,

$$V_1 = -(200/100)(0.4) = -0.8 \text{ V}$$

The second op amp is a summer

$$V_o = -(40/10)(-0.2) - (40/20)(-0.8) = 0.8 + 1.6$$

$$= \mathbf{2.4\ V}.$$

www.konkur.in

Chapter 5, Solution 62.

Let v_1 = output of the first op amp
v_2 = output of the second op amp

The first stage is a summer

$$v_1 = -\frac{R_2}{R_1}v_i - \frac{R_2}{R_f}v_o \qquad (1)$$

The second stage is a follower. By voltage division

$$v_o = v_2 = \frac{R_4}{R_3 + R_4}v_1 \longrightarrow v_1 = \frac{R_3 + R_4}{R_4}v_o \qquad (2)$$

From (1) and (2),

$$\left(1 + \frac{R_3}{R_4}\right)v_o = -\frac{R_2}{R_1}v_i - \frac{R_2}{R_f}v_o$$

$$\left(1 + \frac{R_3}{R_4} + \frac{R_2}{R_f}\right)v_o = -\frac{R_2}{R_1}v_i$$

$$\frac{v_o}{v_i} = -\frac{R_2}{R_1}\cdot\frac{1}{1 + \frac{R_3}{R_4} + \frac{R_2}{R_f}} = \frac{-R_2R_4R_f}{R_1\left(R_2R_4 + R_3R_f + R_4R_f\right)}$$

www.konkur.in

Chapter 5, Solution 63.

The two op amps are summers. Let v_1 be the output of the first op amp. For the first stage,

$$v_1 = -\frac{R_2}{R_1}v_i - \frac{R_2}{R_3}v_o \qquad (1)$$

For the second stage,

$$v_o = -\frac{R_4}{R_5}v_1 - \frac{R_4}{R_6}v_i \qquad (2)$$

Combining (1) and (2),

$$v_o = \frac{R_4}{R_5}\left(\frac{R_2}{R_1}\right)v_i + \frac{R_4}{R_5}\left(\frac{R_2}{R_3}\right)v_o - \frac{R_4}{R_6}v_i$$

$$v_o\left(1 - \frac{R_2R_4}{R_3R_5}\right) = \left(\frac{R_2R_4}{R_1R_5} - \frac{R_4}{R_6}\right)v_i$$

$$\boldsymbol{\frac{v_o}{v_i} = \frac{\dfrac{R_2R_4}{R_1R_5} - \dfrac{R_4}{R_6}}{1 - \dfrac{R_2R_4}{R_3R_5}}}$$

www.konkur.in

Chapter 5, Solution 64

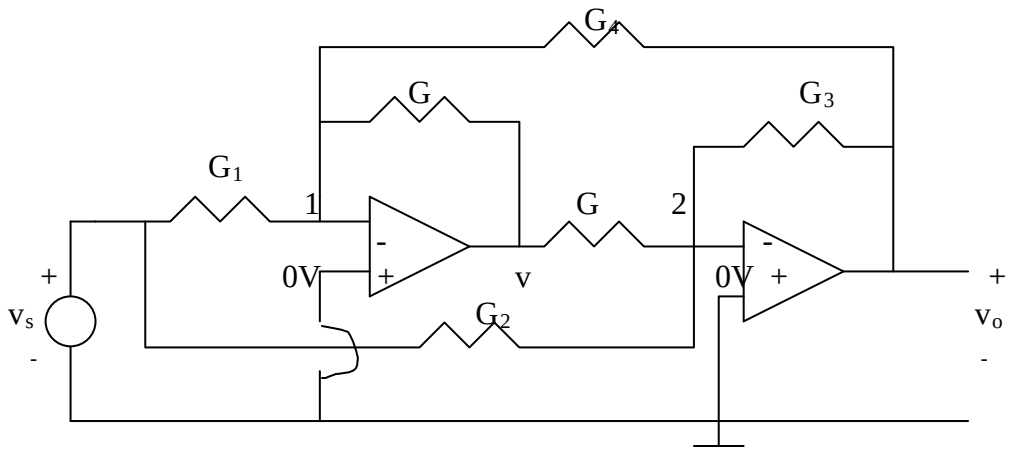

At node 1, v_1=0 so that KCL gives

$$G_1 v_s + G_4 v_o = -Gv \qquad (1)$$

At node 2,

$$G_2 v_s + G_3 v_o = -Gv \qquad (2)$$

From (1) and (2),

$$G_1 v_s + G_4 v_o = G_2 v_s + G_3 v_o \longrightarrow (G_1 - G_2) v_s = (G_3 - G_4) v_o$$

or

$$\frac{v_o}{v_s} = \frac{G_1 - G_2}{G_3 - G_4}$$

www.konkur.in

Chapter 5, Solution 65

The output of the first op amp (to the left) is 6 mV. The second op amp is an inverter so that its output is

$$v_o' = -\frac{30}{10}(6\text{mV}) = -18\,\text{mV}$$

The third op amp is a noninverter so that

$$\boldsymbol{v_o' = \frac{40}{40+8} v_o \quad \longrightarrow \quad v_o = \frac{48}{40} v_o' = \underline{-21.6\,\text{mV}}}$$

www.konkur.in

Chapter 5, Solution 66.

We can start by looking at the contributions to v_o from each of the sources and the fact that each of them go through inverting amplifiers.

The 6 V source contributes –[100k/25k]6; the 4 V source contributes –[40k/20k][–(100k/20k)]4; and the 2 V source contributes –[100k/10k]2 or

$$v_o = \frac{-100}{25}(6) - \frac{40}{20}\left(-\frac{100}{20}\right)(4) - \frac{100}{10}(2)$$

$$= -24 + 40 - 20 = \mathbf{-4V}$$

www.konkur.in

Chapter 5, Solution 67.

$$v_o = -\frac{80}{40}\left(-\frac{80}{20}\right)(0.3) - \frac{80}{20}(0.7)$$
$$= 4.8 - 2.8 = \mathbf{2\ V}.$$

www.konkur.in

Chapter 5, Solution 68.

If $R_q = \infty$, the first stage is an inverter.

$$V_a = -\frac{15}{5}(15) = -45\,\text{mV}$$

when V_a is the output of the first op amp.

The second stage is a noninverting amplifier.

$$v_o = \left(1 + \frac{6}{2}\right)v_a = (1+3)(-45) = \mathbf{-180mV}.$$

www.konkur.in

Chapter 5, Solution 69.

In this case, the first stage is a summer

$$v_a = -\frac{15}{5}(15) - \frac{15}{10}v_o = -45 - 1.5v_o$$

For the second stage,

$$v_o = \left(1 + \frac{6}{2}\right)v_a = 4v_a = 4(-45 - 1.5v_o)$$

$$7v_o = -180 \quad v_o = -\frac{180}{7} = \mathbf{-25.71\ mV}.$$

www.konkur.in

Chapter 5, Solution 70.

The output of amplifier A is

$$v_A = -\frac{30}{10}(1) - \frac{30}{10}(2) = -9$$

The output of amplifier B is

$$v_B = -\frac{20}{10}(3) - \frac{20}{10}(4) = -14$$

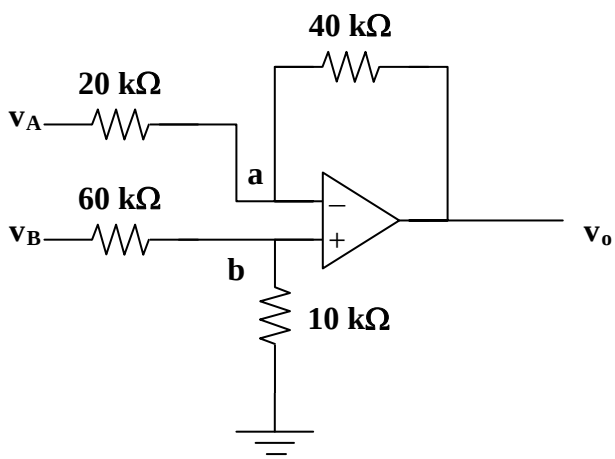

$$v_b = \frac{10}{60+10}(-14) = -2V$$

At node a, $\frac{v_A - v_a}{20} = \frac{v_a - v_o}{40}$

But $v_a = v_b = -2V$, $2(-9+2) = -2-v_o$

Therefore, v_o = **12V**

www.konkur.in

Chapter 5, Solution 71

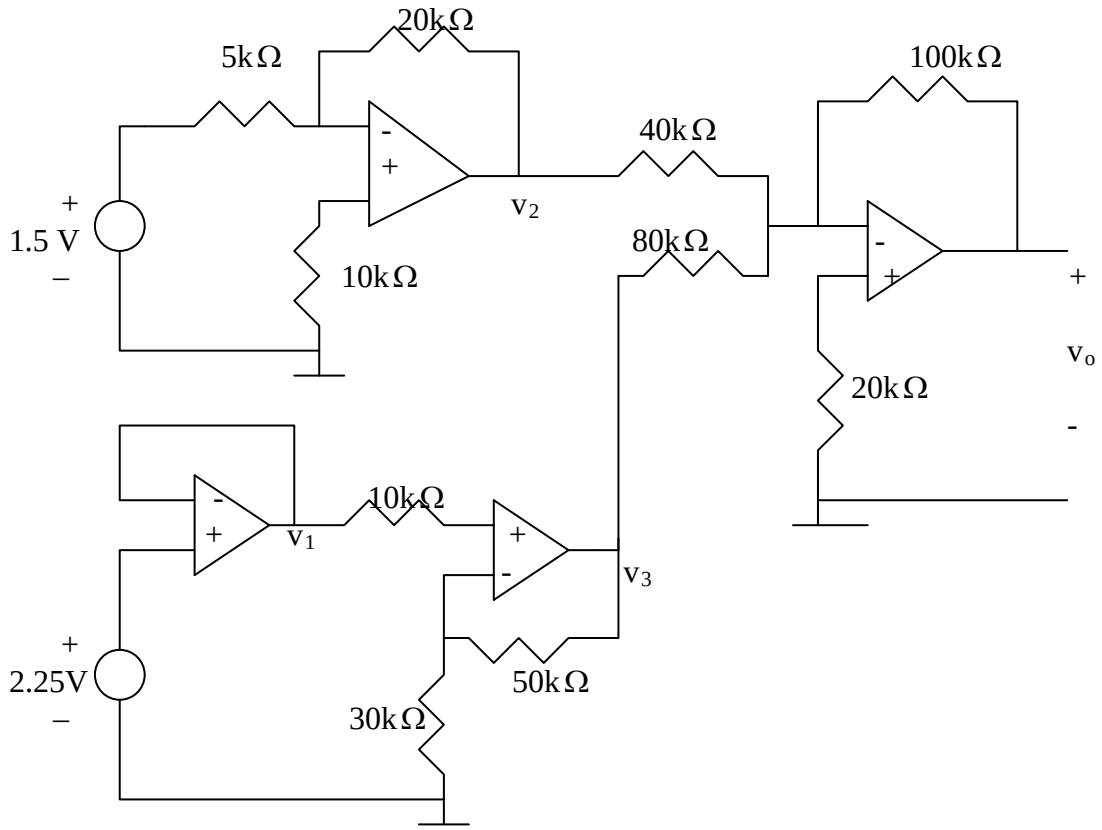

$$v_1 = 2.25, \qquad v_2 = -\frac{20}{5}(1.5) = -6, \qquad v_3 = (1+\frac{50}{30})v_1 = 6$$

$$v_o = -\left(\frac{100}{40}v_2 + \frac{100}{80}v_3\right) = -(-15+7.5) = \mathbf{7.5\ V}.$$

www.konkur.in

Chapter 5, Solution 72.

Since no current flows into the input terminals of ideal op amp, there is no voltage drop across the 20 kΩ resistor. As a voltage summer, the output of the first op amp is

$$v_{01} = 1.8 \text{ V}$$

The second stage is an inverter

$$v_2 = -\frac{250}{100} v_{01}$$

$$= -2.5(1.8) = \mathbf{-4.5\ V}.$$

www.konkur.in

Chapter 5, Solution 73.

The first stage is a noninverting amplifier. The output is

$$v_{o1} = \frac{50}{10}(1.8) + 1.8 = 10.8V$$

The second stage is another noninverting amplifier whose output is

$$v_L = v_{01} = \mathbf{10.8V}$$

www.konkur.in

Chapter 5, Solution 74.

Let v_1 = output of the first op amp
v_2 = input of the second op amp.

The two sub-circuits are inverting amplifiers

$$v_1 = -\frac{100}{10}(0.9) = -9\text{V}$$

$$v_2 = -\frac{32}{1.6}(0.6) = -12\text{V}$$

$$i_o = \frac{v_1 - v_2}{20\text{k}} = -\frac{-9+12}{20\text{k}} = \mathbf{150\ \mu A}.$$

www.konkur.in

Chapter 5, Solution 75.

The schematic is shown below. Pseudo-components VIEWPOINT and IPROBE are involved as shown to measure v_o and i respectively. Once the circuit is saved, we click Analysis | Simulate. The values of v and i are displayed on the pseudo-components as:

$$i = \mathbf{200\ \mu A}$$

$$(v_o/v_s) = -4/2 = \mathbf{-2}$$

The results are slightly different than those obtained in Example 5.11.

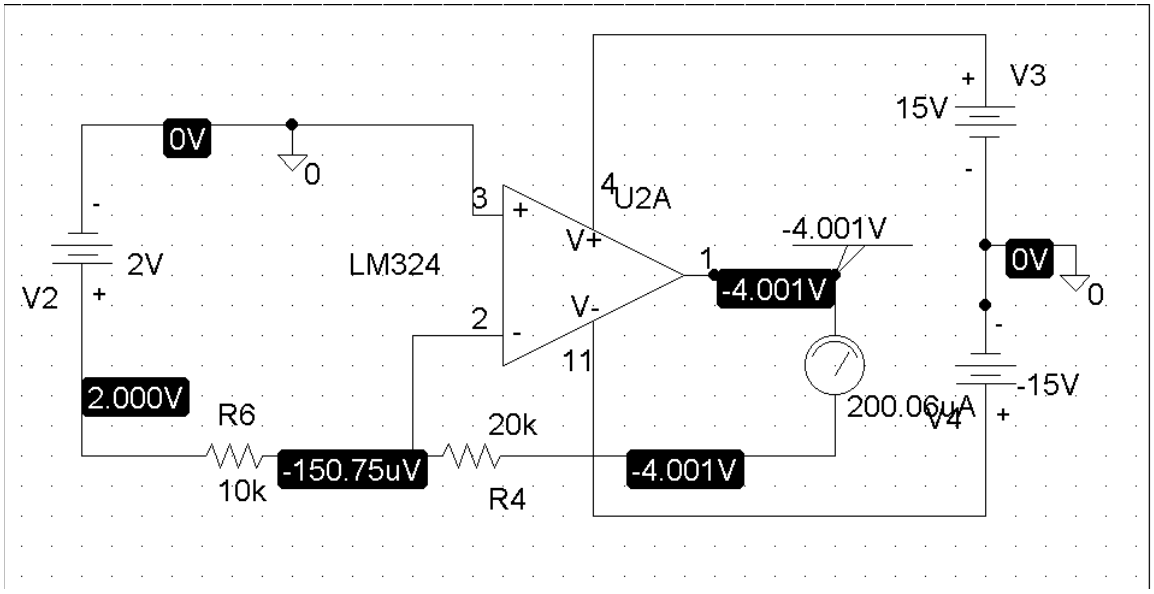

www.konkur.in

Chapter 5, Solution 76.

The schematic is shown below. IPROBE is inserted to measure i_o. Upon simulation, the value of i_o is displayed on IPROBE as

$$i_o = \mathbf{-562.5\ \mu A}$$

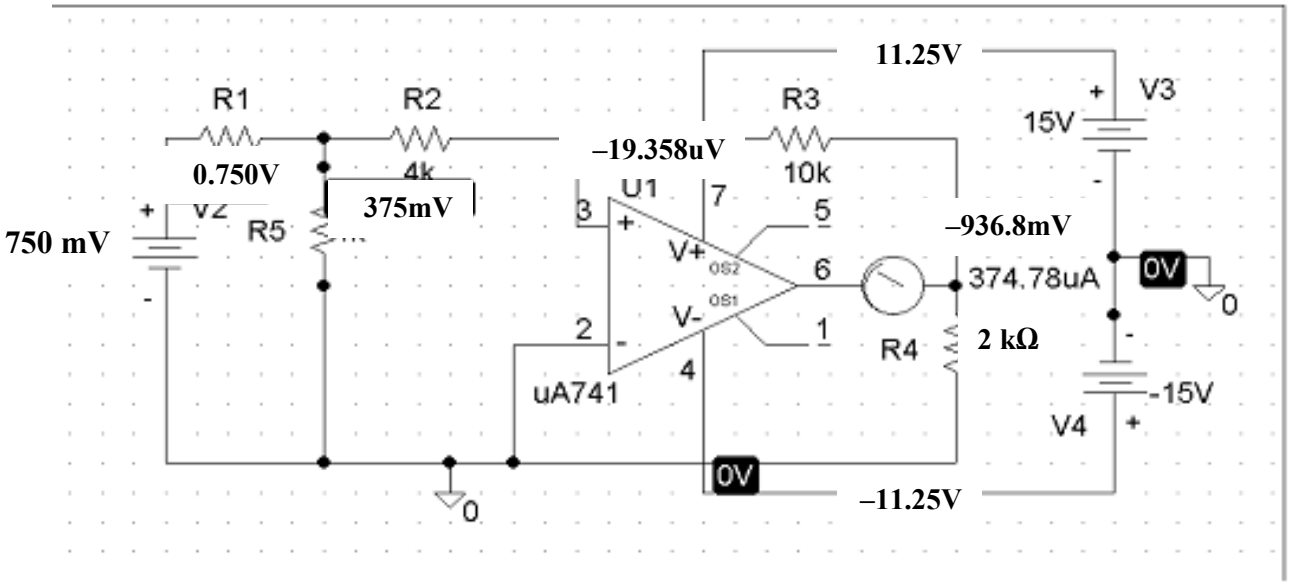

www.konkur.in

Chapter 5, Solution 77.

The schematic for the PSpice solution is shown below.

Note that the output voltage, **–6.686 mV**, agrees with the answer to problem, 5.48.

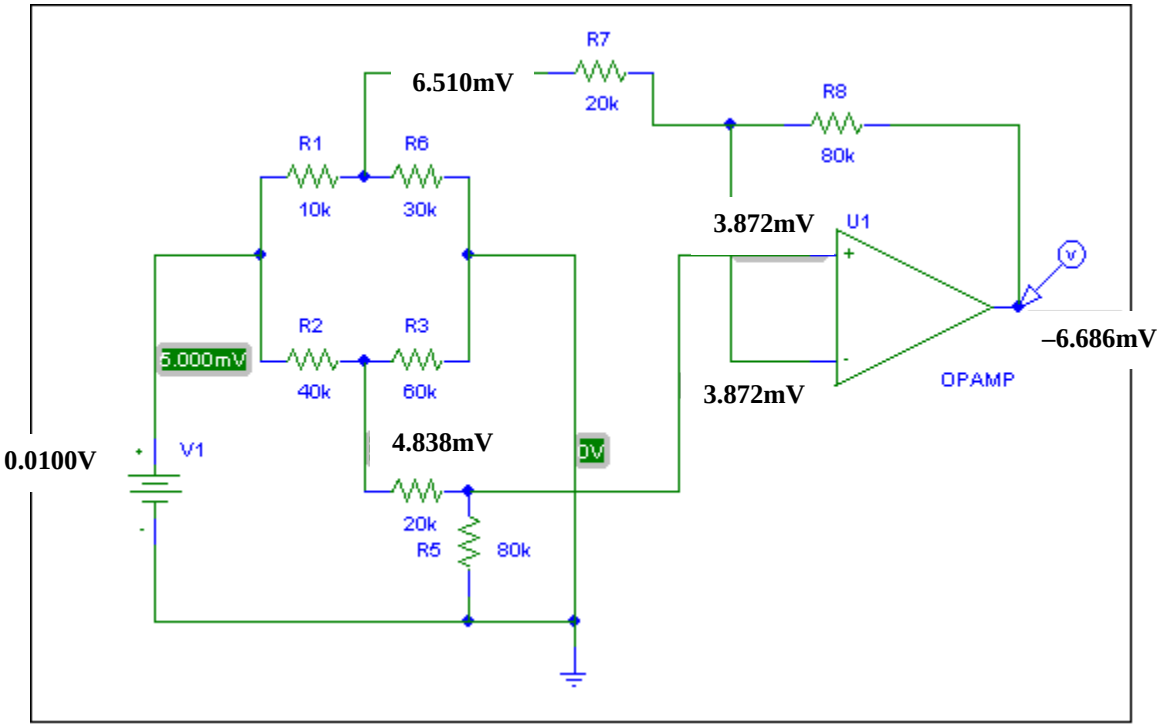

www.konkur.in

Chapter 5, Solution 78.

The circuit is constructed as shown below. We insert a VIEWPOINT to display v_o. Upon simulating the circuit, we obtain,

$$v_o = \mathbf{667.75\ mV}$$

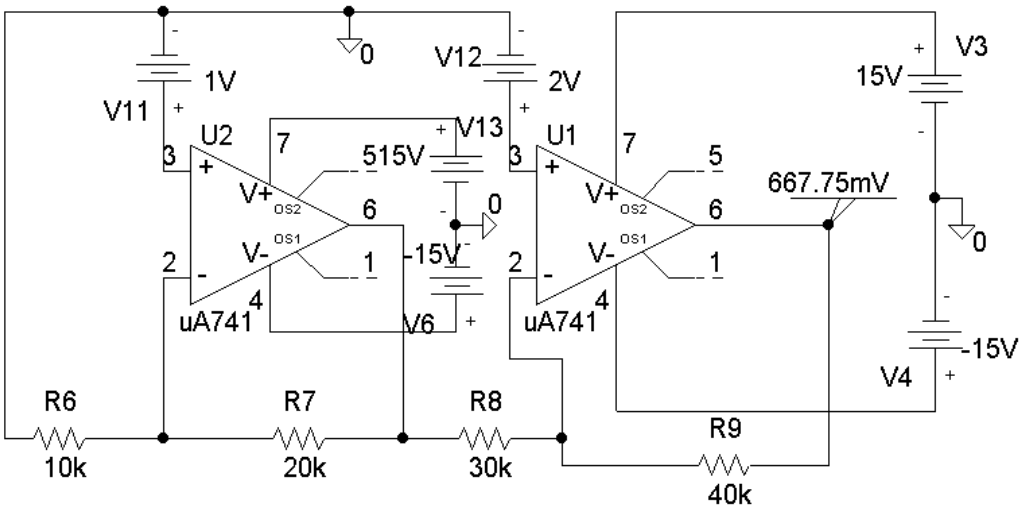

Chapter 5, Solution 79.

The schematic is shown below.

$$v_o = \mathbf{-4.992\ V}$$

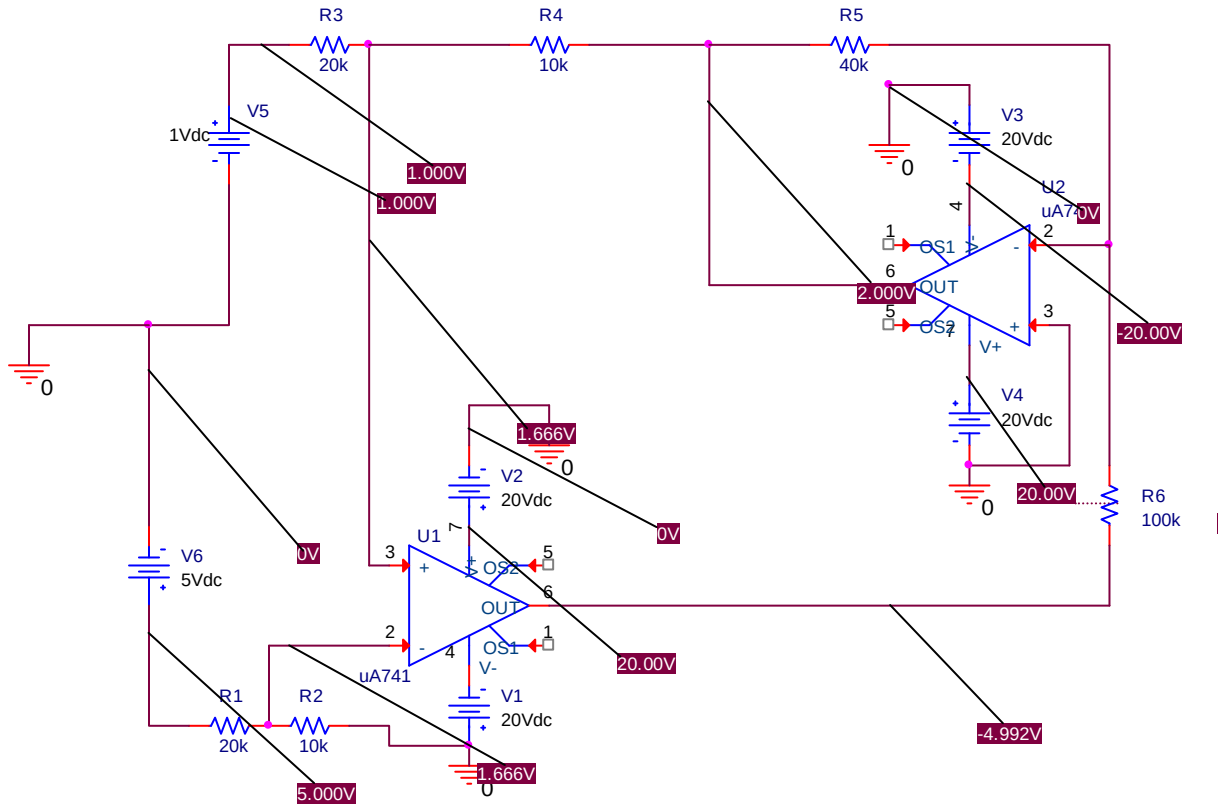

Checking using nodal analysis we get,

For the first op-amp we get $v_{a1} = [5/(20+10)]10 = 1.6667$ V $= v_{b1}$.

For the second op-amp, $[(v_{b1} - 1)/20] + [(v_{b1} - v_{c2})/10] = 0$ or $v_{c2} = 10[1.6667–1)/20] + 1.6667 = 2$ V;

$[(v_{a2} - v_{c2})/40] + [(v_{a2} - v_{c1})/100] = 0$; and $v_{b2} = 0 = v_{a2}$. This leads to $v_{c1} = -2.5v_{c2}$. Thus,

$$= \mathbf{-5\ V}.$$

www.konkur.in

Chapter 5, Solution 80.

The schematic is as shown below. After it is saved and simulated, we obtain

$$v_o = \mathbf{2.4\ V}.$$

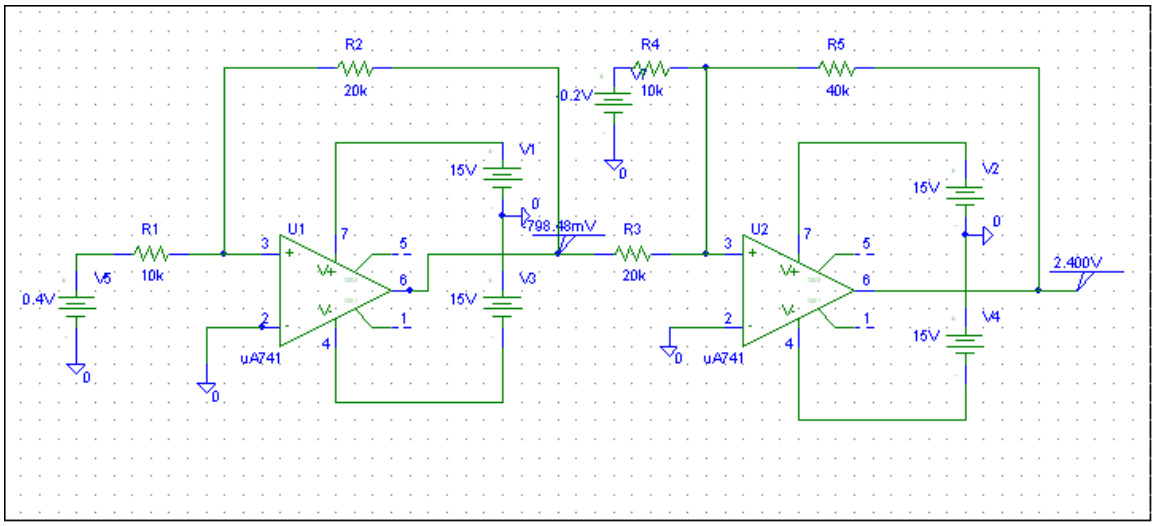

www.konkur.in

Chapter 5, Solution 81.

The schematic is shown below. We insert one VIEWPOINT and one IPROBE to measure v_o and i_o respectively. Upon saving and simulating the circuit, we obtain,

$$v_o = \mathbf{343.4\ mV}$$

$$i_o = \mathbf{24.51\ \mu A}$$

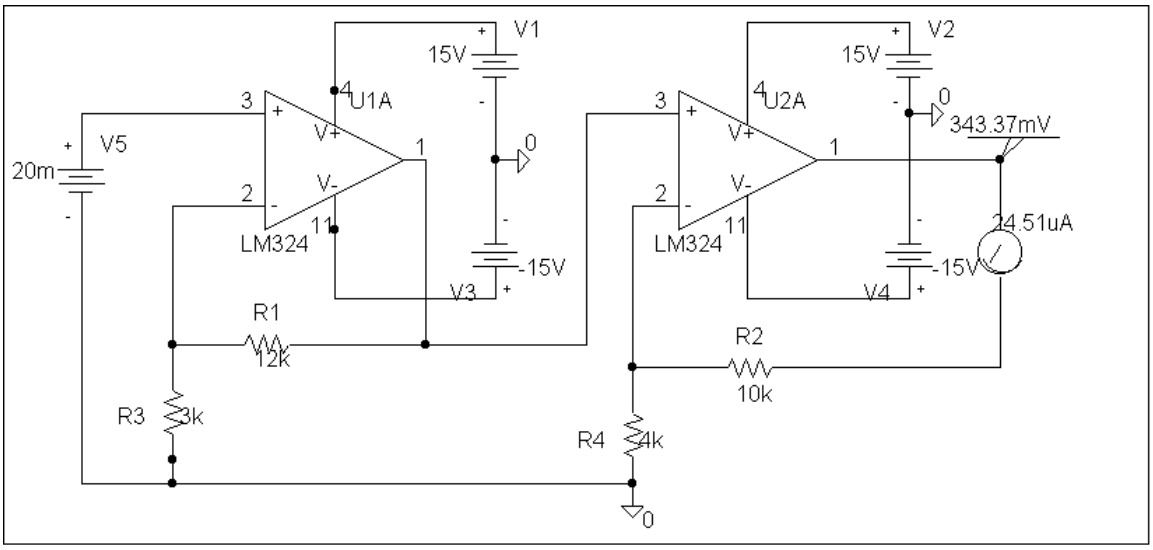

www.konkur.in

Chapter 5, Solution 82.

The maximum voltage level corresponds to

$$11111 = 2^5 - 1 = 31$$

Hence, each bit is worth (7.75/31) = **250 mV**

www.konkur.in

Chapter 5, Solution 83.

The result depends on your design. Hence, let R_G = 10 k ohms, R_1 = 10 k ohms, R_2 = 20 k ohms, R_3 = 40 k ohms, R_4 = 80 k ohms, R_5 = 160 k ohms, R_6 = 320 k ohms, then,

$$-v_o = (R_f/R_1)v_1 + \text{---------} + (R_f/R_6)v_6$$

$$= v_1 + 0.5v_2 + 0.25v_3 + 0.125v_4 + 0.0625v_5 + 0.03125v_6$$

(a) $|v_o| = 1.1875 = 1 + 0.125 + 0.0625 = 1 + (1/8) + (1/16)$ which implies,

$[v_1\ v_2\ v_3\ v_4\ v_5\ v_6]$ = **[100110]**

(b) $|v_o| = 0 + (1/2) + (1/4) + 0 + (1/16) + (1/32) = (27/32) =$ **843.75 mV**

(c) This corresponds to [1 1 1 1 1 1].

$|v_o| = 1 + (1/2) + (1/4) + (1/8) + (1/16) + (1/32) = 63/32 =$ **1.96875 V**

www.konkur.in

Chapter 5, Solution 84.

(a) The easiest way to solve this problem is to use superposition and to solve for each term letting all of the corresponding voltages be equal to zero. Also, starting with each current contribution (i_k) equal to one amp and working backwards is easiest.

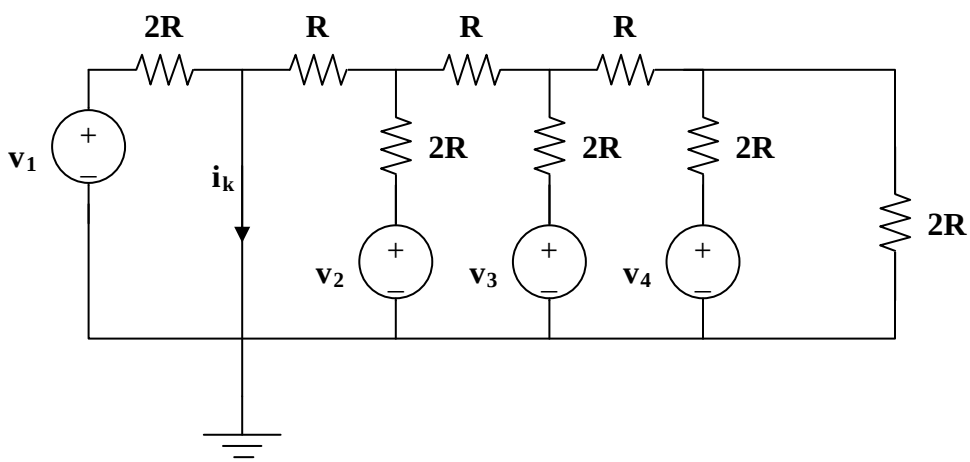

For the first case, let $v_2 = v_3 = v_4 = 0$, and $i_1 = 1A$.

Therefore, $v_1 = 2R$ volts or $i_1 = v_1/(2R)$.

Second case, let $v_1 = v_3 = v_4 = 0$, and $i_2 = 1A$.

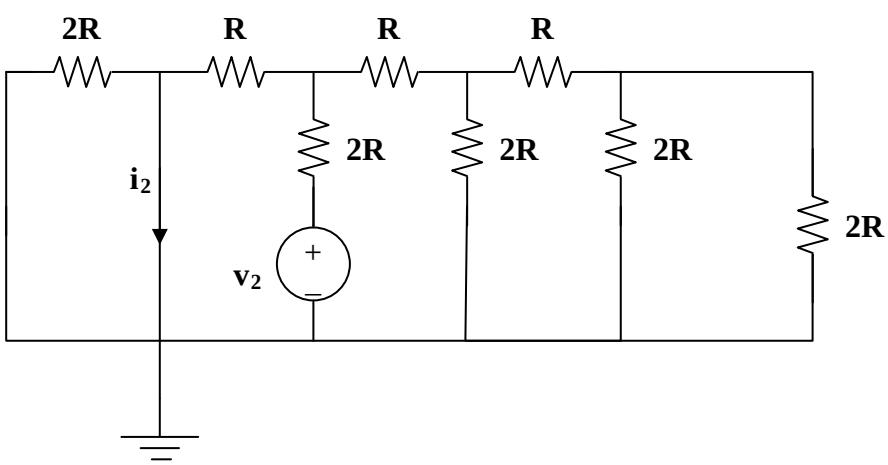

Simplifying, we get,

www.konkur.in

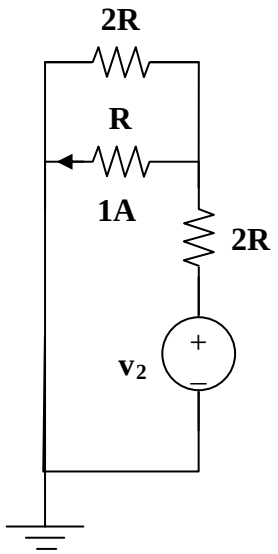

Therefore, $v_2 = 1xR + (3/2)(2R) = 4R$ volts or $i_2 = v_2/(4R)$ or $i_2 = 0.25v_2/R$. Clearly this is equal to the desired $1/4^{th}$.

Now for the third case, let $v_1 = v_2 = v_4 = 0$, and $i_3 = 1A$.

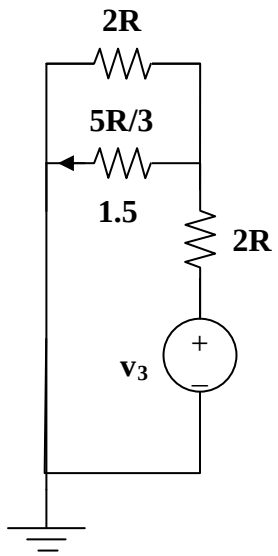

The voltage across the 5R/3-ohm resistor is 5R/2 volts. The current through the 2R resistor at the top is equal to (5/4) A and the current through the 2R-ohm resistor in series with the source is (3/2) + (5/4) = (11/4) A. Thus,

www.konkur.in

$v_3 = (11/2)R + (5/2)R = (16/2)R = 8R$ volts or $i_3 = v_3/(8R)$ or $0.125v_3/R$. Again, we have the desired result.

For the last case, $v_1 = v_2 = v_3$ and $i_4 = 1A$. Simplifying the circuit we get,

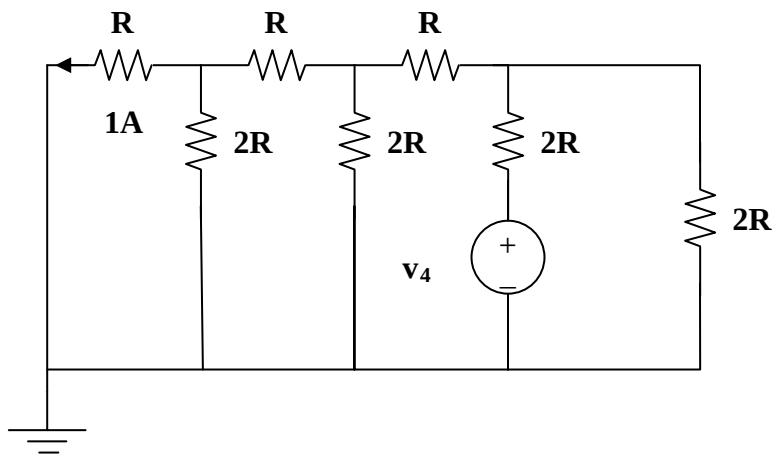

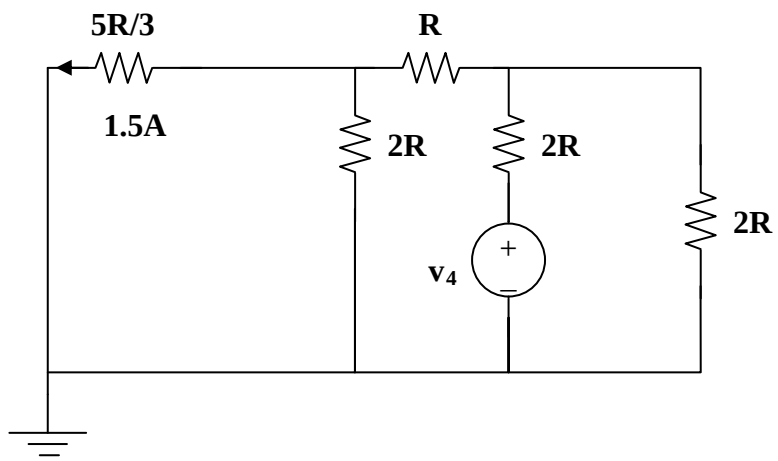

www.konkur.in

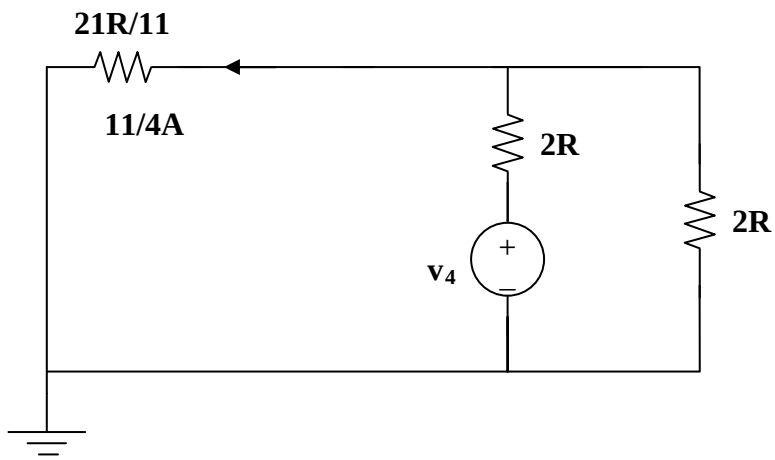

Since the current through the equivalent 21R/11-ohm resistor is (11/4) amps, the voltage across the 2R-ohm resistor on the right is (21/4)R volts. This means the current going through the 2R-ohm resistor is (21/8) A. Finally, the current going through the 2R resistor in series with the source is ((11/4)+(21/8)) = (43/8) A.

Now, v_4 = (21/4)R + (86/8)R = (128/8)R = 16R volts or $i_4 = v_4/(16R)$ or $0.0625v_4/R$. This is just what we wanted.

(b) If R_f = 12 k ohms and R = 10 k ohms,

$$-v_o = (12/20)[v_1 + (v_2/2) + (v_3/4) + (v_4/8)]$$

$$= 0.6[v_1 + 0.5v_2 + 0.25v_3 + 0.125v_4]$$

For $[v_1\ v_2\ v_3\ v_4] = [1\ 0\ 11]$,

$$|v_o| = 0.6[1 + 0.25 + 0.125] = \mathbf{825\ mV}$$

For $[v_1\ v_2\ v_3\ v_4] = [0\ 1\ 0\ 1]$,

$$|v_o| = 0.6[0.5 + 0.125] = \mathbf{375\ mV}$$

www.konkur.in

Chapter 5, Solution 85.
This is a noninverting amplifier.

$$v_o = (1 + R/40k)v_s = (1 + R/40k)2$$

The power being delivered to the 10-kΩ give us

$$P = 10\text{ mW} = (v_o)^2/10k \quad \text{or} \quad v_o = \sqrt{10^{-2} x 10^4} = 10V$$

Returning to our first equation we get

$$10 = (1 + R/40k)2 \quad \text{or} \quad R/40k = 5 - 1 = 4$$

Thus, R = **160 kΩ**.

www.konkur.in

Chapter 5, Solution 86.

Design a voltage controlled ideal current source (within the operating limits of the op amp) where the output current is equal to $200v_s(t)$ μA.

The easiest way to solve this problem is to understand that the op amp creates an output voltage so that the current through the feedback resistor remains equal to the input current.

In the following circuit, the op amp wants to keep the voltage at a equal to zero. So, the input current is $v_s/R = 200v_s(t)$ μA $= v_s(t)/5k$.

Thus, this circuit acts like an ideal voltage controlled current source no matter what (within the operational parameters of the op amp) is connected between a and b. Note, you can change the direction of the current between a and b by sending $v_s(t)$ through an inverting op amp circuit.

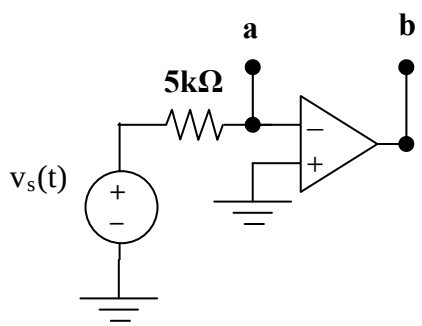

www.konkur.in

Chapter 5, Solution 87.

The output, v_a, of the first op amp is,

$$v_a = (1 + (R_2/R_1))v_1 \qquad (1)$$

Also,

$$v_o = (-R_4/R_3)v_a + (1 + (R_4/R_3))v_2 \qquad (2)$$

Substituting (1) into (2),

$$v_o = (-R_4/R_3)\,(1 + (R_2/R_1))v_1 + (1 + (R_4/R_3))v_2$$

Or,

$$v_o = \mathbf{(1 + (R_4/R_3))v_2 - (R_4/R_3 + (R_2R_4/R_1R_3))v_1}$$

If $R_4 = R_1$ and $R_3 = R_2$, then,

$$v_o = (1 + (R_4/R_3))(v_2 - v_1)$$

which is a subtractor with a gain of $\mathbf{(1 + (R_4/R_3))}$.

www.konkur.in

Chapter 5, Solution 88.

We need to find V_{Th} at terminals a – b, from this,

$$v_o = (R_2/R_1)(1 + 2(R_3/R_4))V_{Th} = (500/25)(1 + 2(10/2))V_{Th}$$

$$= 220V_{Th}$$

Now we use Fig. (b) to find V_{Th} in terms of v_i.

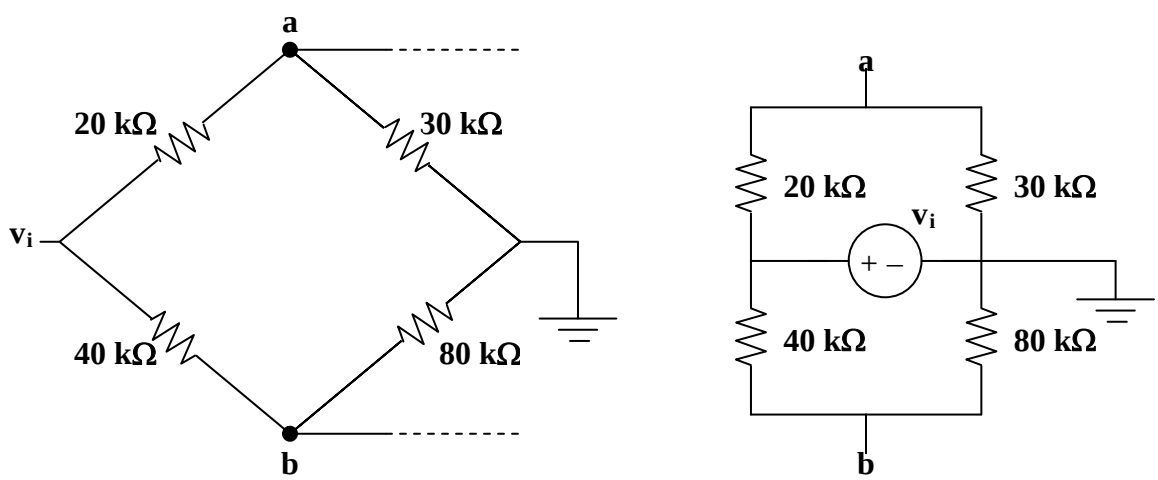

(a) **(b)**

$$v_a = (3/5)v_i, \quad v_b = (2/3)v_i$$

$$V_{Th} = v_b - v_a \quad (1/15)v_i$$

$$(v_o/v_i) = A_v = -220/15 = \mathbf{-14.667}$$

www.konkur.in

Chapter 5, Solution 89.

A **summer** with $\mathbf{v_o = -v_1 - (5/3)v_2}$ where v_2 = **6-V battery** and an **inverting amplifier** with $\mathbf{v_1 = -12v_s}$.

www.konkur.in

Chapter 5, Solution 90.

The op amp circuit in Fig. 5.107 is a *current amplifier*. Find the current gain i_o/i_s of the amplifier.

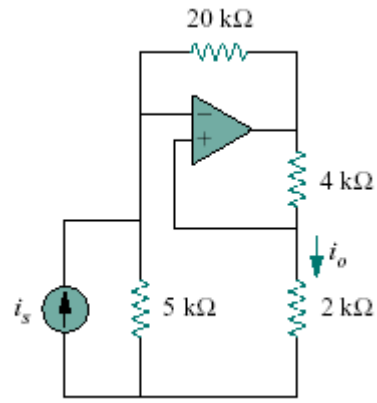

Figure 5.107
For Prob. 5.90.

Solution

Transforming the current source to a voltage source produces the circuit below,

At node b, $v_b = (2/(2 + 4))v_o = v_o/3$

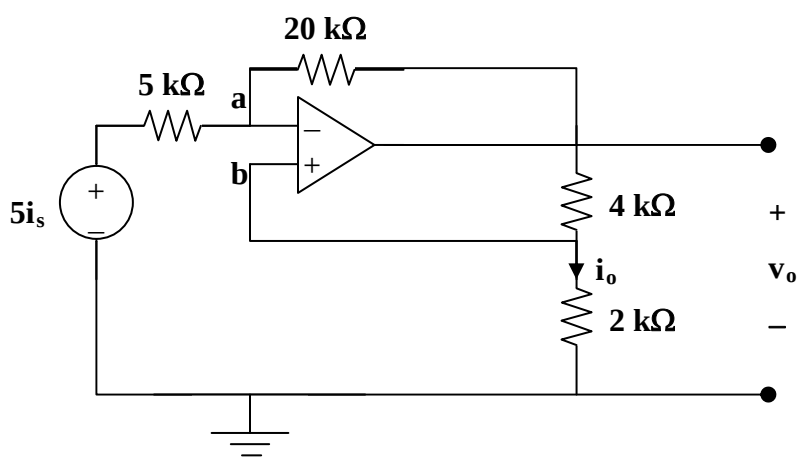

At node a, $(5i_s - v_a)/5 = (v_a - v_o)/20$

But $v_a = v_b = v_o/3$. $20i_s - (4/3)v_o = (1/3)v_o - v_o$, or $i_s = v_o/30$

$i_o = [(2/(2 + 4))/2]v_o = v_o/6$

$i_o/i_s = (v_o/6)/(v_o/30) = \mathbf{5}$

www.konkur.in

Chapter 5, Solution 91.

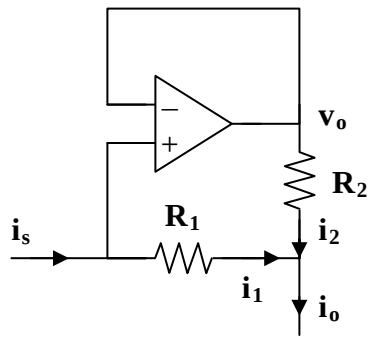

$$i_o = i_1 + i_2 \qquad (1)$$

But $$i_1 = i_s \qquad (2)$$

R_1 and R_2 have the same voltage, v_o, across them.

$$R_1 i_1 = R_2 i_2, \text{ which leads to } i_2 = (R_1/R_2) i_1 \qquad (3)$$

Substituting (2) and (3) into (1) gives,

$$i_o = i_s(1 + R_1/R_2)$$

$$i_o/i_s = 1 + (R_1/R_2) = 1 + 8/1 = \mathbf{9}$$

www.konkur.in

Chapter 5, Solution 92

The top op amp circuit is a non-inverter, while the lower one is an inverter. The output at the top op amp is

$$v_1 = (1 + 60/30)v_i = 3v_i$$

while the output of the lower op amp is

$$v_2 = -(50/20)v_i = -2.5v_i$$

Hence, $$v_o = v_1 - v_2 = 3v_i + 2.5v_i = 5.5v_i$$

$$v_o/v_i = \mathbf{5.5}$$

www.konkur.in

Chapter 5, Solution 93.

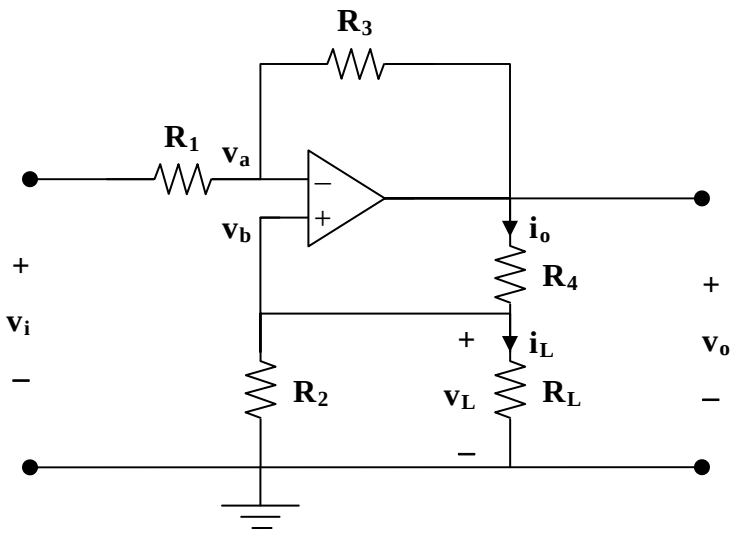

At node a, $(v_i - v_a)/R_1 = (v_a - v_o)/R_3$

$$v_i - v_a = (R_1/R_2)(v_a - v_o)$$

$$v_i + (R_1/R_3)v_o = (1 + R_1/R_3)v_a \qquad (1)$$

But $v_a = v_b = v_L$. Hence, (1) becomes

$$v_i = (1 + R_1/R_3)v_L - (R_1/R_3)v_o \qquad (2)$$

$i_o = v_o/(R_4 + R_2||R_L)$, $i_L = (R_2/(R_2 + R_L))i_o = (R_2/(R_2 + R_L))(v_o/(R_4 + R_2||R_L))$

Or, $$v_o = i_L[(R_2 + R_L)(R_4 + R_2||R_L)/R_2 \qquad (3)$$

But, $$v_L = i_L R_L \qquad (4)$$

Substituting (3) and (4) into (2),

$$v_i = (1 + R_1/R_3)\, i_L R_L - R_1[(R_2 + R_L)/(R_2R_3)](R_4 + R_2||R_L)i_L$$

$$= [((R_3 + R_1)/R_3)R_L - R_1((R_2 + R_L)/(R_2R_3)(R_4 + (R_2R_L/(R_2 + R_L))]i_L$$

$$= (1/A)i_L$$

www.konkur.in

Thus,

$$A = \frac{1}{\left(1+\frac{R_1}{R_3}\right)R_L - R_1\left(\frac{R_2+R_L}{R_2R_3}\right)\left(R_4+\frac{R_2R_L}{R_2+R_L}\right)}$$

Please note that A has the units of mhos. An easy check is to let every resistor equal 1-ohm and v_i equal to one amp. Going through the circuit produces i_L = 1A. Plugging into the above equation produces the same answer so the answer does check.

www.konkur.in

Chapter 6, Solution 1.

$$i = C\frac{dv}{dt} = 7.5\left(2e^{-3t} - 6te^{-3t}\right) = \mathbf{15(1 - 3t)e^{-3t}\ A}$$

$$p = vi = 15(1-3t)e^{-3t} \cdot 2t\ e^{-3t} = \mathbf{30t(1 - 3t)e^{-6t}\ W}.$$

$15(1 - 3t)e^{-3t}$ A, $30t(1 - 3t)e^{-6t}$ W

www.konkur.in

Chapter 6, Solution 2.

$w(t) = (1/2)C(v(t))^2$ or $(v(t))^2 = 2w(t)/C = (20\cos^2(377t))/(50\text{x}10^{-6}) = 0.4\text{x}10^6\cos^2(377t)$ or $v(t) = \pm 632.5\cos(377t)$ V. Let us assume that $v(t) = 632.5\cos(377t)$ V, which leads to $i(t) = C(dv/dt) = 50\text{x}10^{-6}(632.5)(-377\sin(377t))$

$$= \mathbf{-11.923\sin(377t)\ A}.$$

Please note that if we had chosen the negative value for v, then i(t) would have been positive.

www.konkur.in

Chapter 6, Solution 3.

Design a problem to help other students to better understand how capacitors work.

Although there are many ways to work this problem, this is an example based on the same kind of problem asked in the third edition.

Problem

In 5 s, the voltage across a 40-mF capacitor changes from 160 V to 220 V. Calculate the average current through the capacitor.

Solution

$$i = C\frac{dv}{dt} = 40x10^{-3}\frac{220-160}{5} = \mathbf{480\ mA}$$

www.konkur.in

Chapter 6, Solution 4.

$$v = \frac{1}{C}\int_0^t i\,dt + v(0)$$

$$= \frac{1}{5}\int_0^t 4\sin(4t)dt + 1 = \left(-\frac{0.8}{4}\cos(4t)\right)\Bigg|_0^t + 1 = -0.2\cos(4t) + 0.2 + 1$$

= **[1.2 – 0.2 cos(4t)] V**.

www.konkur.in

Chapter 6, Solution 5.

$$v = \begin{cases} 5000t, & 0 < t < 2ms \\ 20 - 5000t, & 2 < t < 6ms \\ -40 + 5000t, & 6 < t < 8ms \end{cases}$$

$$i = C\frac{dv}{dt} = \frac{4x10^{-6}}{10^{-3}} \begin{cases} 5, & 0 < t < 2ms \\ -5, & 2 < t < 6ms \\ 5, & 6 < t < 8ms \end{cases} = \underline{\begin{cases} 20\ mA, & 0 < t < 2ms \\ -20\ mA, & 2 < t < 6ms \\ 20\ mA, & 6 < t < 8ms \end{cases}}$$

www.konkur.in

Chapter 6, Solution 6.

$i = C\dfrac{dv}{dt} = 55x10^{-6}$ times the slope of the waveform.

For example, for 0 < t < 2,

$$\frac{\text{dv}}{\text{dt}} = \frac{10}{2\text{x}10^{-3}}$$

i = $C\dfrac{dv}{dt} = (55x10^{-6})\dfrac{10}{2x10^{-3}} = 275mA$

Thus the current i(t) is sketched below.

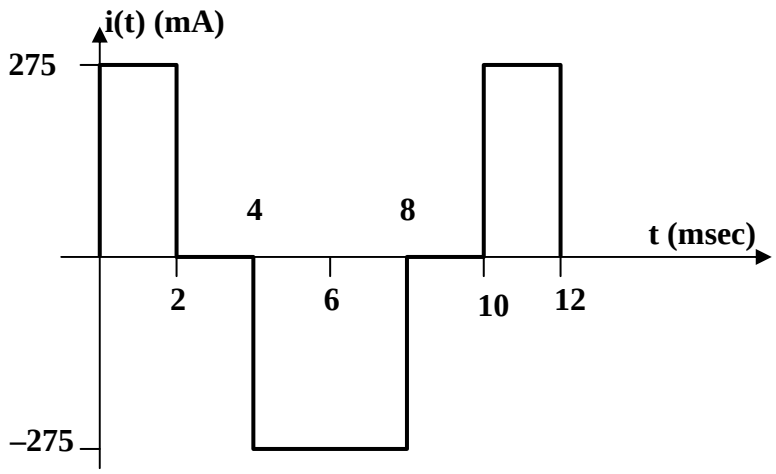

www.konkur.in

Chapter 6, Solution 7.

$$v = \frac{1}{C}\int idt + v(t_o) = \frac{1}{25x10^{-3}}\int_o^t 5tx10^{-3}dt + 10$$

$$= \frac{2.5t^2}{25} + 10 = \mathbf{[0.1t^2 + 10]\ V}.$$

www.konkur.in

Chapter 6, Solution 8.

(a) $i = C\dfrac{dv}{dt} = -100ACe^{-100t} - 600BCe^{-600t}$ (1)

$i(0) = 2 = -100AC - 600BC \longrightarrow 5 = -A - 6B$ (2)

$v(0^+) = v(0^-) \longrightarrow 50 = A + B$ (3)

Solving (2) and (3) leads to

<u>A=61, B=-11</u>

(b) $\text{Energy} = \dfrac{1}{2}Cv^2(0) = \dfrac{1}{2}x4x10^{-3}x2500 = \underline{5\text{ J}}$

(c) From (1),

$$\boldsymbol{i = -100x61x4x10^{-3}e^{-100t} - 600x11x4x10^{-3}e^{-600t} = \underline{-24.4e^{-100t} - 26.4e^{-600t}\ \text{A}}}$$

www.konkur.in

Chapter 6, Solution 9.

$$v(t) = \frac{1}{1/2}\int_o^t 6\left(1 - e^{-t}\right)dt + 0 = 12\left(t + e^{-t}\right)\Big|_0^t V = 12(t + e^{-t}) - 12$$

$v(2) = 12(2 + e^{-2}) - 12 =$ **13.624 V**

$p = iv = [12\ (t + e^{-t}) - 12]6(1-e^{-t})$

$p(2) = [12\ (2 + e^{-2}) - 12]6(1-e^{-2})$ = **70.66 W**

www.konkur.in

Chapter 6, Solution 10

$$i = C\frac{dv}{dt} = 5x10^{-3}\frac{dv}{dt}$$

$$v = \begin{cases} 16t, & 0 < t < 1\mu s \\ 16, & 1 < t < 3\,\mu s \\ 64 - 16t, & 3 < t < 4\mu s \end{cases}$$

$$\frac{dv}{dt} = \begin{cases} 16x10^{6}, & 0 < t < 1\mu s \\ 0, & 1 < t < 3\,\mu s \\ -16x10^{6}, & 3 < t < 4\mu s \end{cases}$$

$$\boldsymbol{i(t) = \begin{cases} 80\,\text{kA}, & 0 < t < 1\mu s \\ 0, & 1 < t < 3\,\mu s \\ -80\,\text{kA}, & 3 < t < 4\mu s \end{cases}}$$

www.konkur.in

Chapter 6, Solution 11.

$$v = \frac{1}{C}\int_0^t i\,dt + v(0) = 10 + \frac{1}{4x10^{-3}}\int_0^t i(t)dt$$

For 0<t <2, i(t)=15mA, V(t)= 10+ $v = 10 + \frac{10^3}{4x10^{-3}}\int_0^t 15dt = 10 + 3.76t$

v(2) = 10+7.5 =17.5

For 2 < t <4, i(t) = –10 mA

$$v(t) = \frac{1}{4x10^{-3}}\int_2^t i(t)dt + v(2) = -\frac{10x10^{-3}}{4x10^{-3}}\int_2^t dt + 17.5 = 22.5 + 2.5t$$

v(4)=22.5-2.5x4 =12.5

For 4<t<6, i(t) = 0, $v(t) = \frac{1}{4x10^{-3}}\int_2^t 0dt + v(4) = 12.5$

For 6<t<8, i(t) = 10 mA

$$v(t) = \frac{10x10^3}{4x10^{-3}}\int_4^t dt + v(6) = 2.5(t-6) + 12.5 = 2.5t - 2.5$$

Hence,

$$v(t) = \begin{cases} 10 + 3.75t\,\text{V}, & 0 < t < 2\text{s} \\ 22.5 - 2.5t\,\text{V}, & 2 < t < 4\text{s} \\ 12.5\,\text{V}, & 4 < t < 6\text{s} \\ 2.5t - 2.5\,\text{V}, & 6 < t < 8\text{s} \end{cases}$$

which is sketched below.

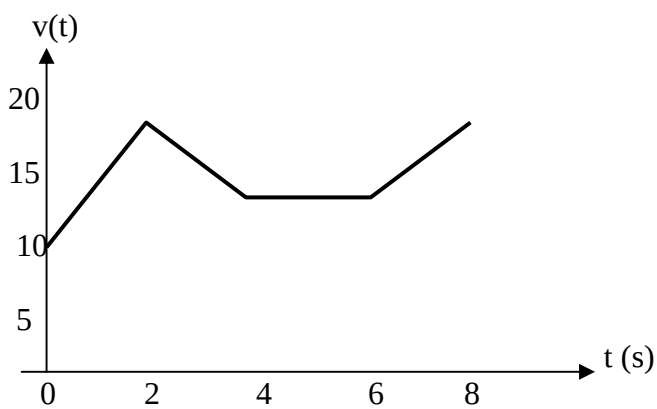

www.konkur.in

Chapter 6, Solution 12.

$i_R = V/R = (30/12)e^{-2000t} = 2.5\ e^{-2000t}$ and $i_C = C(dv/dt) = 0.1x30(-2000)\ e^{-2000t}$ $= -6000\ e^{-2000t}$ A. Thus, $i = i_R + i_C = -5{,}997.5\ e^{-2000t}$. The power is equal to:

$$vi = \mathbf{-179.925\ e^{-4000t}\ W}.$$

www.konkur.in

Chapter 6, Solution 13.

Under dc conditions, the circuit becomes that shown below:

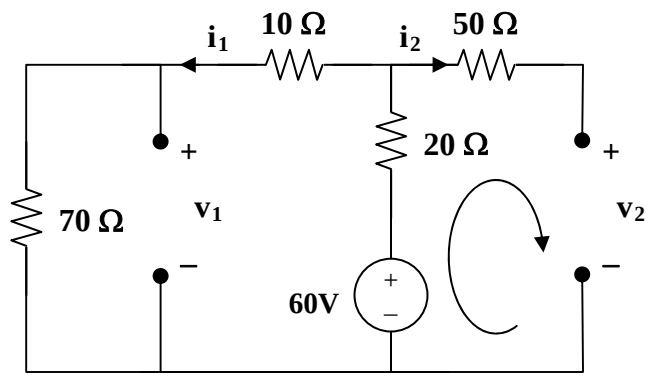

$i_2 = 0$, $i_1 = 60/(70+10+20) = 0.6$ A

$v_1 = 70i_1 = 42$ V, $v_2 = 60–20i_1 = 48$ V

Thus, v_1 = **42 V**, v_2 = **48 V**.

www.konkur.in

Chapter 6, Solution 14.

20 pF is in series with 60pF = 20*60/80=15 pF
30-pF is in series with 70pF = 30x70/100=21pF
15pF is in parallel with 21pF = 15+21 = **36 pF**

www.konkur.in

Chapter 6, Solution 15.

Arranging the capacitors in parallel results in circuit shown in Fig. (1) (It should be noted that the resistors are in the circuits only to limit the current surge as the capacitors charge. Once the capacitors are charged the current through the resistors are obviously equal to zero.):

$v_1 = v_2 = 100$

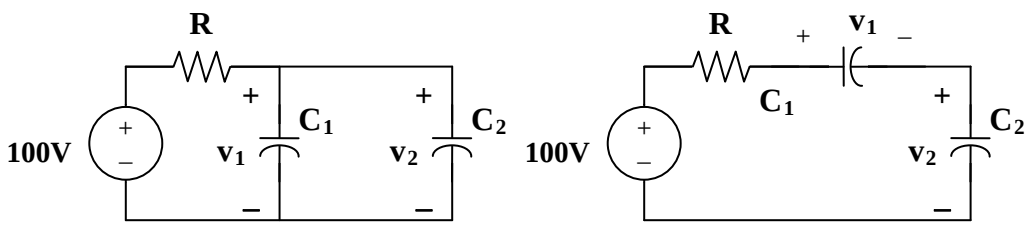

(1) **(2)**

$$w_{20} = \frac{1}{2}Cv^2 = \frac{1}{2}x25x10^{-6}x100^2 = \textbf{125 mJ}$$

$$w_{30} = \frac{1}{2}x75x10^{-6}x100^2 = \textbf{375 mJ}$$

(b) Arranging the capacitors in series results in the circuit shown in Fig. (2):

$$v_1 = \frac{C_2}{C_1 + C_2}V = \frac{75}{100}x100 = 75 \text{ V}, \text{ v}_2 = 25 \text{ V}$$

$$w_{25} = \frac{1}{2}x25x10^{-6}x75^2 = \textbf{70.31 mJ}$$

$$w_{75} = \frac{1}{2}x75x10^{-6}x25^2 = \textbf{23.44 mJ}.$$

(a) **125 mJ, 375 mJ** **(b) 70.31 mJ, 23.44 mJ**

www.konkur.in

Chapter 6, Solution 16

$$C_{eq} = 14 + \frac{Cx80}{C + 80} = 30 \quad \longrightarrow \quad \underline{C = 20\ \mu F}$$

www.konkur.in

Chapter 6, Solution 17.

(a) 4F in series with 12F = 4 x 12/(16) = 3F
3F in parallel with 6F and 3F = 3+6+3 = 12F
4F in series with 12F = 3F
i.e. C_{eq} = **3F**

(b) C_{eq} = 5 + [6x(4 + 2)/(6+4+2)] = 5 + (36/12) = 5 + 3 = **8F**

(c) 3F in series with 6F = (3 x 6)/9 = 2F

$$\frac{1}{C_{eq}} = \frac{1}{2} + \frac{1}{6} + \frac{1}{3} = 1$$

C_{eq} = **1F**

www.konkur.in

Chapter 6, Solution 18.

4 μF in parallel with 4 μF = 8μF
4 μF in series with 4 μF = 2 μF
2 μF in parallel with 4 μF = 6 μF
Hence, the circuit is reduced to that shown below.

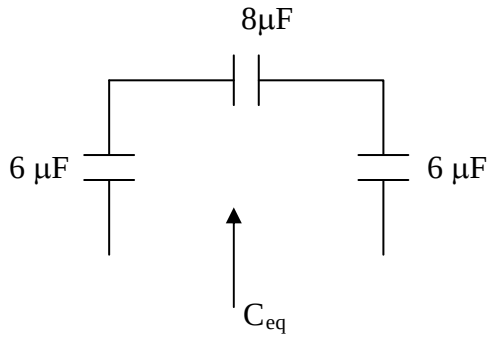

$$\frac{1}{C_{eq}} = \frac{1}{6} + \frac{1}{6} + \frac{1}{8} = 0.4583 \longrightarrow C_{eq} = \underline{2.1818\ \mu F}$$

www.konkur.in

Chapter 6, Solution 19.

We combine 10-, 20-, and 30- μF capacitors in parallel to get 60 μF. The 60 - μF capacitor in series with another 60- μF capacitor gives 30 μF.
30 + 50 = 80 μF, 80 + 40 = 120 μF
The circuit is reduced to that shown below.

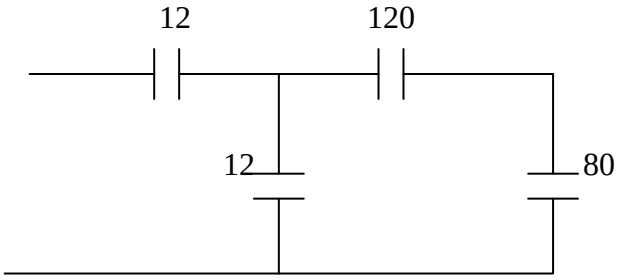

120- μF capacitor in series with 80 μF gives (80x120)/200 = 48
48 + 12 = 60
60- μF capacitor in series with 12 μF gives (60x12)/72 = **10 μF**

www.konkur.in

Chapter 6, Solution 20.

Consider the circuit shown below.

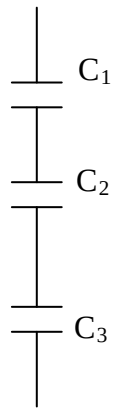

$C_1 = 1 + 1 = 2\mu F$
$C_2 = 2 + 2 + 2 = 6\mu F$

$C_3 = 4x3 = 12\mu F$

$1/C_{eq} = (1/C_1) + (1/C_2) + (1/C_3) = 0.5 + 0.16667 + 0.08333 = 0.75x10^6$

C_{eq} = **1.3333 μF**.

www.konkur.in

Chapter 6, Solution 21.

4μF in series with 12μF = (4x12)/16 = 3μF
3μF in parallel with 3μF = 6μF
6μF in series with 6μF = 3μF
3μF in parallel with 2μF = 5μF
5μF in series with 5μF = 2.5μF

Hence C_{eq} = **2.5μF**

www.konkur.in

Chapter 6, Solution 22.

Combining the capacitors in parallel, we obtain the equivalent circuit shown below:

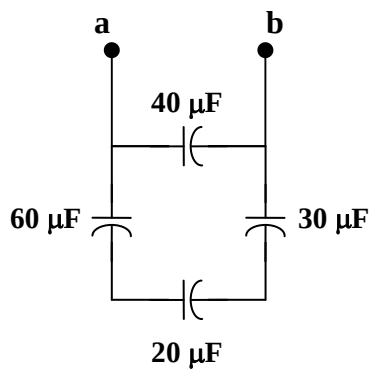

Combining the capacitors in series gives C^1_{eq}, where

$$\frac{1}{C^1_{eq}} = \frac{1}{60} + \frac{1}{20} + \frac{1}{30} = \frac{1}{10} \longrightarrow C^1_{eq} = 10\mu F$$

Thus

$$C_{eq} = 10 + 40 = \mathbf{50\ \mu F}$$

www.konkur.in

Chapter 6, Solution 23.

Using Fig. 6.57, design a problem to help other students better understand how capacitors work together when connected in series and parallel.

Although there are many ways to work this problem, this is an example based on the same kind of problem asked in the third edition.

Problem

For the circuit in Fig. 6.57, determine:

(a) the voltage across each capacitor,
(b) the energy stored in each capacitor.

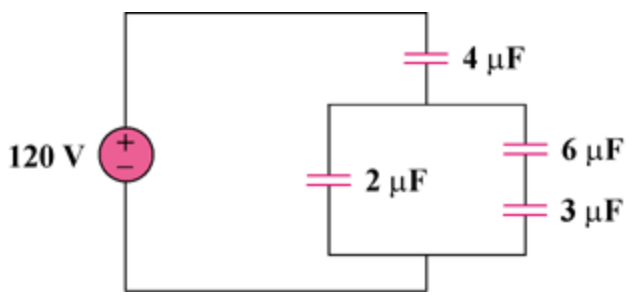

Figure 6.57

Solution

(a) 3μF is in series with 6μF 3x6/(9) = 2μF

$v_{4\mu F}$ = 1/2 x 120 = **60V**

$v_{2\mu F}$ = **60V**

$$v_{6\mu F} = \frac{3}{6+3}(60) = \mathbf{20V}$$

$v_{3\mu F}$ = 60 - 20 = **40V**

(b) Hence w = 1/2 Cv^2

$w_{4\mu F}$ = 1/2 x 4 x 10^{-6} x 3600 = **7.2mJ**

$w_{2\mu F}$ = 1/2 x 2 x 10^{-6} x 3600 = **3.6mJ**

$w_{6\mu F}$ = 1/2 x 6 x 10^{-6} x 400 = **1.2mJ**

$w_{3\mu F}$ = 1/2 x 3 x 10^{-6} x 1600 = **2.4mJ**

www.konkur.in

Chapter 6, Solution 24.

20μF is series with 80μF = 20x80/(100) = 16μF
14μF is parallel with 16μF = 30μF

(a) $v_{30\mu F}$ = **90V**

$v_{60\mu F}$ = **30V**

$v_{14\mu F}$ = **60V**

$v_{20\mu F} = \frac{80}{20+80} x60 = \mathbf{48V}$

$v_{80\mu F}$ = 60 - 48 = **12V**

(b) Since $w = \frac{1}{2}Cv^2$

$w_{30\mu F}$ = 1/2 x 30 x 10^{-6} x 8100 = **121.5mJ**

$w_{60\mu F}$ = 1/2 x 60 x 10^{-6} x 900 = **27mJ**

$w_{14\mu F}$ = 1/2 x 14 x 10^{-6} x 3600 = **25.2mJ**

$w_{20\mu F}$ = 1/2 x 20 x 10^{-6} x $(48)^2$ = **23.04mJ**

$w_{80\mu F}$ = 1/2 x 80 x 10^{-6} x 144 = **5.76mJ**

www.konkur.in

Chapter 6, Solution 25.

(a) For the capacitors in series,

$$Q_1 = Q_2 \longrightarrow C_1 v_1 = C_2 v_2 \longrightarrow \frac{v_1}{v_2} = \frac{C_2}{C_1}$$

$$v_s = v_1 + v_2 = \frac{C_2}{C_1} v_2 + v_2 = \frac{C_1 + C_2}{C_1} v_2 \longrightarrow \boldsymbol{v_2 = \frac{C_1}{C_1 + C_2} v_s}$$

Similarly, $\boldsymbol{v_1 = \frac{C_2}{C_1 + C_2} v_s}$

(b) For capacitors in parallel

$$v_1 = v_2 = \frac{Q_1}{C_1} = \frac{Q_2}{C_2}$$

$$Q_s = Q_1 + Q_2 = \frac{C_1}{C_2} Q_2 + Q_2 = \frac{C_1 + C_2}{C_2} Q_2$$

or

$$Q_2 = \frac{C_2}{C_1 + C_2}$$

$$Q_1 = \frac{C_1}{C_1 + C_2} Q_s$$

$$i = \frac{dQ}{dt} \longrightarrow \boldsymbol{i_1 = \frac{C_1}{C_1 + C_2} i_s}, \quad \boldsymbol{i_2 = \frac{C_2}{C_1 + C_2} i_s}$$

www.konkur.in

Chapter 6, Solution 26.

(a) $C_{eq} = C_1 + C_2 + C_3 =$ **35μF**

(b) $Q_1 = C_1 v = 5 \text{ x } 150\mu C =$ **0.75mC**
$Q_2 = C_2 v = 10 \text{ x } 150\mu C =$ **1.5mC**
$Q_3 = C_3 v = 20 \text{ x } 150 =$ **3mC**

(c) $w = \frac{1}{2} C_{eq} v^2 = \frac{1}{2} x35x150^2 \mu J =$ **393.8mJ**

www.konkur.in

Chapter 6, Solution 27.

If they are all connected in parallel, we get $C_T = 4x4\mu F = 16\mu F$

If they are all connected in series, we get

$$\frac{1}{C_T} = \frac{4}{4\mu F} \longrightarrow C_T = 1\mu F$$

All other combinations fall within these two extreme cases. Hence,

C_{min} = **1 μF**, C_{max} = **16 μF**

www.konkur.in

Chapter 6, Solution 28.

We may treat this like a resistive circuit and apply delta-wye transformation, except that R is replaced by 1/C.

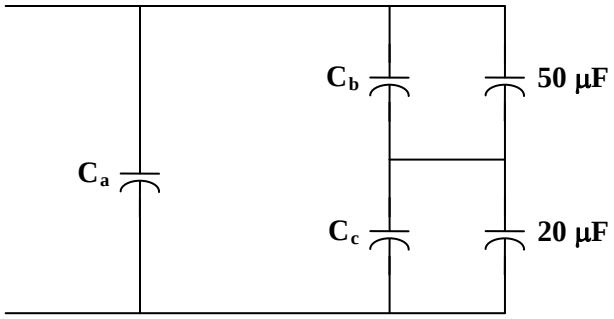

$$\frac{1}{C_a} = \frac{\left(\frac{1}{10}\right)\left(\frac{1}{40}\right)+\left(\frac{1}{10}\right)\left(\frac{1}{30}\right)+\left(\frac{1}{30}\right)\left(\frac{1}{40}\right)}{\frac{1}{30}}$$

$$= \frac{3}{40}+\frac{1}{10}+\frac{1}{40}=\frac{2}{10}$$

$C_a = 5\mu F$

$$\frac{1}{C_b} = \frac{\frac{1}{400}+\frac{1}{300}+\frac{1}{1200}}{\frac{1}{10}} = \frac{2}{30}$$

$C_b = 15\mu F$

$$\frac{1}{C_c} = \frac{\frac{1}{400}+\frac{1}{300}+\frac{1}{1200}}{\frac{1}{40}} = \frac{4}{15}$$

$C_c = 3.75\mu F$

C_b in parallel with $50\mu F = 50 + 15 = 65\mu F$
C_c in series with $20\mu F = 23.75\mu F$
$65\mu F$ in series with $23.75\mu F = \frac{65x23.75}{88.75} = 17.39\mu F$
$17.39\mu F$ in parallel with $C_a = 17.39 + 5 = 22.39\mu F$

Hence C_{eq} = **22.39μF**

www.konkur.in

Chapter 6, Solution 29.

(a) C in series with C = C/(2)

C/2 in parallel with C = 3C/2

$$\frac{3C}{2} \text{ in series with C} = \frac{C x \frac{3C}{2}}{5\frac{C}{2}} = \frac{3C}{5}$$

$$3\frac{C}{5} \text{ in parallel with C} = C + 3\frac{C}{5} = \mathbf{1.6\ C}$$

(b)

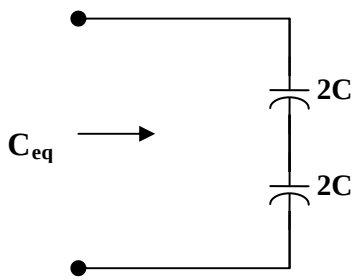

$$\frac{1}{C_{eq}} = \frac{1}{2C} + \frac{1}{2C} = \frac{1}{C}$$

C_{eq} = **1 C**

www.konkur.in

Chapter 6, Solution 30.

$$v_o = \frac{1}{C}\int_o^t i\,dt + i(0)$$

For 0 < t < 1, i = 90t mA,

$$v_o = \frac{10^{-3}}{3x10^{-6}}\int_o^t 90t\,dt + 0 = 15t^2 kV$$

$v_o(1) = 15$ kV

For 1< t < 2, i = (180 – 90t) mA,

$$v_o = \frac{10^{-3}}{3x10^{-6}}\int_1^t (180 - 90t)\,dt + v_o(1)$$

$= [60t - 15t^2]\Big|_1^t + 15kV$

$= [60t - 15t^2 - (60–15) + 15]$ kV $= [60t - 15t^2 - 30]$ kV

$$\boldsymbol{v_o(t) = \begin{cases} 15t^2 kV, & 0 < t < 1 \\ [60t - 15t^2 - 30]kV, & 1 < t < 2 \end{cases}}$$

www.konkur.in

Chapter 6, Solution 31.

$$i_s(t) = \begin{cases} 30tmA, & 0 < t < 1 \\ 30mA, & 1 < t < 3 \\ -75 + 15t, & 3 < t < 5 \end{cases}$$

$$C_{eq} = 4 + 6 = 10\mu F$$

$$v = \frac{1}{C_{eq}} \int_o^t i dt + v(0)$$

For 0 < t < 1,

$$v = \frac{10^{-3}}{10x10^{-6}} \int_o^t 30t \, dt + 0 = 1.5t^2 \text{ kV}$$

For 1 < t < 3,

$$v = \frac{10^3}{10} \int_1^t 20dt + v(1) = [3(t-1) + 1.5]kV$$

$$= [3t - 1.5]kV$$

For 3 < t < 5,

$$v = \frac{10^3}{10} \int_3^t 15(t-5)dt + v(3)$$

$$= \left[1.5\frac{t^2}{2} - 7.5t \right] \Big|_3^t + 7.5kV = [0.75t^2 - 7.5t + 23.25]kV$$

$$\boldsymbol{v(t) = \begin{cases} 1.5t^2 kV, & 0 < t < 1s \\ [3t - 1.5]kV, & 1 < t < 3s \\ [0.75t^2 - 7.5t + 23.25]kV, & 3 < t < 5s \end{cases}}$$

$$i_1 = C_1 \frac{dv}{dt} = 6x10^{-6} \frac{dv}{dt}$$

$$\boldsymbol{i_1 = \begin{cases} 18tmA, & 0 < t < 1s \\ 18mA, & 1 < t < 3s \\ [9t - 45]mA, & 3 < t < 5s \end{cases}}$$

$$i_2 = C_2 \frac{dv}{dt} = 4x10^{-6} \frac{dv}{dt}$$

www.konkur.in

$$i_2 = \begin{cases} 12tmA, & 0 < t < 1s \\ 12mA, & 1 < t < 3s \\ [6t - 30]mA, & 3 < t < 5s \end{cases}$$

www.konkur.in

Chapter 6, Solution 32.

(a) C_{eq} = (12x60)/72 = 10 μF

$$v_1 = \frac{10^{-3}}{12x10^{-6}}\int_0^t 50e^{-2t}dt + v_1(0) = \underline{-2083e^{-2t}\Big|_0^t + 50} = \underline{-2083e^{-2t} + 2133}V$$

$$v_2 = \frac{10^{-3}}{60x10^{-6}}\int_0^t 50e^{-2t}dt + v_2(0) = \underline{-416.7e^{-2t}\Big|_0^t + 20} = \underline{-416.7e^{-2t} + 436.7}V$$

(b) At t=0.5s,

$$v_1 = -2083e^{-1} + 2133 = 1366.7, \qquad v_2 = -416.7e^{-1} + 436.7 = 283.4$$

$$w_{12\mu F} = \frac{1}{2}x12x10^{-6}x(1366.7)^2 = \underline{11.207\text{ J}}$$

$$w_{20\mu F} = \frac{1}{2}x20x10^{-6}x(283.4)^2 = \underline{803.2\text{ mJ}}$$

$$w_{40\mu F} = \frac{1}{2}x40x10^{-6}x(283.4)^2 = \underline{1.6063\text{ J}}$$

www.konkur.in

Chapter 6, Solution 33

Because this is a totally capacitive circuit, we can combine all the capacitors using the property that capacitors in parallel can be combined by just adding their values and we combine capacitors in series by adding their reciprocals. However, for this circuit we only have the three capacitors in parallel.

3 F + 2 F = 5 F (we need this to be able to calculate the voltage)

$C_{Th} = C_{eq} = 5+3+2 = 10$ F

The voltage will divide equally across the two 5 F capacitors. Therefore, we get:

$V_{Th} =$ **15 V**, $C_{Th} =$ **10 F**.

15 V, **10 F**

www.konkur.in

Chapter 6, Solution 34.

$i = 10e^{-t/2}$

$$v = L\frac{di}{dt} = 10x10^{-3}(10)\left(\frac{1}{2}\right)e^{-t/2}$$

$= -50e^{-t/2}$ mV

$v(3) = -50e^{-3/2}$ mV = **–11.157 mV**

$p = vi = -500e^{-t}$ mW

$p(3) = -500e^{-3}$ mW = **–24.89 mW**.

www.konkur.in

Chapter 6, Solution 35.

$$v = L\frac{di}{dt} \longrightarrow L = \frac{v}{di/dt} = \frac{160x10^{-3}}{\frac{(100-50)x10^{-3}}{2x10^{-3}}} = \underline{6.4\ \text{mH}}$$

www.konkur.in

Chapter 6, Solution 36.

Design a problem to help other students to better understand how inductors work.

Although there are many ways to work this problem, this is an example based on the same kind of problem asked in the third edition.

Problem

The current through a 12-mH inductor is $i(t) = 30te^{-2t}$ A, $t \geq 0$. Determine: (a) the voltage across the inductor, (b) the power being delivered to the inductor at t = 1 s, (c) the energy stored in the inductor at t = 1 s.

Solution

(a) $v = L\dfrac{di}{dt} = 12x10^{-3}(30e^{-2t} - 60te^{-2t}) = \underline{(0.36 - 0.72t)e^{-2t}\ \text{V}}$

(b) $p = vi = (0.36 - 0.72x1)e^{-2}x30x1e^{-2} = 0.36x30e^{-4} = \underline{-0.1978\ \text{W}}$

(c) $\text{w} = \dfrac{1}{2}\text{Li}^2 = 0.5\text{x}12\text{x}10^{-3}(30\text{x}1\text{xe}^{-2})^2 =$ **98.9 mJ**.

www.konkur.in

Chapter 6, Solution 37.

$$v = L\frac{di}{dt} = 12x10^{-3}x4(100)\cos 100t$$

$$= \mathbf{4.8\ cos\ (100t)\ V}$$

p = vi = 4.8 x 4 sin 100t cos 100t = 9.6 sin 200t

$$w = \int_o^t pdt = \int_o^{11/200} 9.6\sin 200t$$

$$= -\frac{9.6}{200}\cos 200t\Big|_o^{11/200} J$$

$$= -48(\cos\pi - 1)mJ = \mathbf{96\ mJ}$$

Please note that this problem could have also been done by using (½)Li^2.

www.konkur.in

Chapter 6, Solution 38.

$$v = L\frac{di}{dt} = 40x10^{-3}\left(e^{-2t} - 2te^{-2t}\right)dt$$

$$= \mathbf{40(1-2t)e^{-2t}mV, t > 0}$$

www.konkur.in

Chapter 6, Solution 39

$$v = L\frac{di}{dt} \longrightarrow i = \frac{1}{L}\int_0^t i\,dt + i(0)$$

$$i = \frac{1}{200x10^{-3}}\int_0^t (3t^2 + 2t + 4)dt + 1$$

$$= 5(t^3 + t^2 + 4t)\Big|_0^t + 1$$

i(t) = **[5t^3 + 5t^2 + 20t + 1] A**

www.konkur.in

Chapter 6, Solution 40.

$$i = \begin{cases} 5t, & 0 < t < 2ms \\ 10, & 2 < t < 4ms \\ 30 - 5t, & 4 < t < 6ms \end{cases}$$

$$v = L\frac{di}{dt} = \frac{5x10^{-3}}{10^{-3}} \begin{cases} 5, & 0 < t < 2ms \\ 0, & 2 < t < 4ms \\ -5, & 4 < t < 6ms \end{cases} = \begin{cases} 25, & 0 < t < 2ms \\ 0, & 2 < t < 4ms \\ -25, & 4 < t < 6ms \end{cases}$$

At t = 1ms, v = **25 V**
At t = 3ms, v = **0 V**
At t = 5ms, v= **–25 V**

www.konkur.in

Chapter 6, Solution 41.

$$i = \frac{1}{L}\int_0^t v\,dt + C = \left(\frac{1}{2}\right)\int_o^t 20\left(1 - e^{-2t}\right)dt + C$$

$$= 10\left(t + \frac{1}{2}e^{-2t}\right)\Big|_o^t + C = 10t + 5e^{-2t} - 4.7A$$

Note, we get C = –4.7 from the initial condition for i needing to be 0.3 A.

We can check our results be solving for v = Ldi/dt.

$v = 2(10 - 10e^{-2t})V$ which is what we started with.

At t = l s, $i = 10 + 5e^{-2} - 4.7 = 10 + 0.6767 - 4.7 =$ **5.977 A**

$w = \frac{1}{2}L\,i^2 =$ **35.72J**

www.konkur.in

Chapter 6, Solution 42.

$$i = \frac{1}{L}\int_o^t v dt + i(0) = \frac{1}{5}\int_o^t v(t)dt - 1$$

For $0 < t < 1$, $i = \frac{10}{5}\int_0^t dt - 1 = 2t - 1$ A

For $1 < t < 2$, $i = 0 + i(1) = 1$A

For $2 < t < 3$, $i = \frac{1}{5}\int 10dt + i(2) = 2t\Big|_t^2 + 1$

$= 2t - 3$ A

For $3 < t < 4$, $i = 0 + i(3) = 3$ A

For $4 < t < 5$, $i = \frac{1}{5}\int_4^t 10dt + i(4) = 2t\Big|_4^t + 3$

$= 2t - 5$ A

Thus,

$$\boldsymbol{i(t) = \begin{cases} 2t - 1A, & 0 < t < 1 \\ 1A, & 1 < t < 2 \\ 2t - 3A, & 2 < t < 3 \\ 3A, & 3 < t < 4 \\ 2t - 5, & 4 < t < 5 \end{cases}}$$

www.konkur.in

Chapter 6, Solution 43.

$$w = L\int_{-\infty}^{t} idt = \frac{1}{2}Li^2(t) - \frac{1}{2}Li^2(-\infty)$$

$$= \frac{1}{2}x80x10^{-3}x\left(60x10^{-3}\right)^2 - 0$$

= **144 μJ**.

www.konkur.in

Chapter 6, Solution 44.

(a) $v_L = L\dfrac{di}{dt} = 100x10^{-3}(-400)x50x10^{-3}e^{-400t} = \underline{-2e^{-400t}\ \text{V}}$

(b) Since R and L are in parallel, $v_R = v_L = \underline{-2e^{-400t}\ \text{V}}$

(c) **No**

(d) $\text{w} = \dfrac{1}{2}\text{Li}^2 = 0.5\text{x}100\text{x}10^{-3}(0.05)^2 =$ **125 μJ**.

www.konkur.in

Chapter 6, Solution 45.

$$i(t) = \frac{1}{L}\int_o^t v(t) + i(0)$$

For 0 < t < 1, v = 5t

$$i = \frac{1}{10x10^{-3}}\int_o^t 5t\,dt + 0$$

$$= 250t^2 \ \ A$$

For 1 < t < 2, v = -10 + 5t

$$i = \frac{1}{10x10^{-3}}\int_1^t (-10 + 5t)dt + i(1)$$

$$= \int_1^t (0.5t - 1)dt + 0.25kA$$

$$= [1 - t + 0.25t^2\ ]\ kA$$

$$\boldsymbol{i(t) = \begin{cases} 250t^2\ A, & 0 < t < 1s \\ [1 - t + 0.25t^2]\,kA, & 1 < t < 2s \end{cases}}$$

www.konkur.in

Chapter 6, Solution 46.

Under dc conditions, the circuit is as shown below:

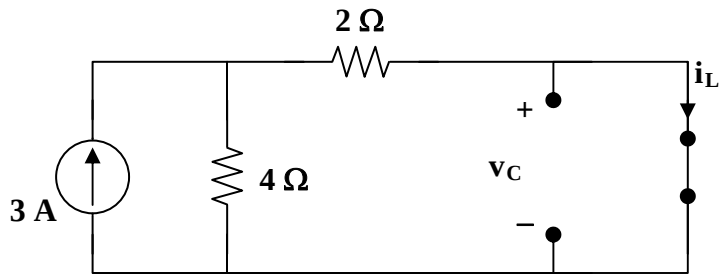

By current division,

$$i_L = \frac{4}{4+2}(3) = \mathbf{2A}, \quad v_c = \mathbf{0V}$$

$$w_L = \frac{1}{2} L\, i_L^2 = \frac{1}{2}\left(\frac{1}{2}\right)(2)^2 = \mathbf{1J}$$

$$w_c = \frac{1}{2} C\, v_c^2 = \frac{1}{2}(2)(v) = \mathbf{0J}$$

www.konkur.in

Chapter 6, Solution 47.

Under dc conditions, the circuit is equivalent to that shown below:

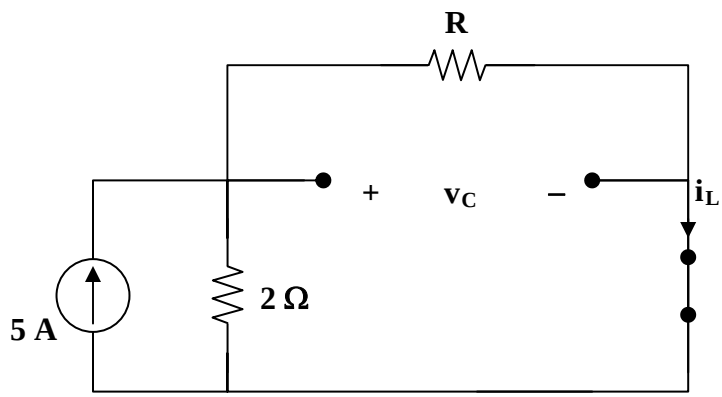

$$i_L = \frac{2}{R+2}(5) = \frac{10}{R+2}, \quad v_c = Ri_L = \frac{10R}{R+2}$$

$$w_c = \frac{1}{2}Cv_c^2 = 80x10^{-6}\,x\,\frac{100R^2}{(R+2)^2}$$

$$w_L = \frac{1}{2}Li_1^2 = 2x10^{-3}\,x\,\frac{100}{(R+2)^2}$$

If $w_c = w_L$,

$$80x10^{-6}\,x\,\frac{100R^2}{(R+2)^2} = \frac{2x10^{-3}x100}{(R+2)^2} \longrightarrow 80 \text{ x } 10^{-3}R^2 = 2$$

$$R = \mathbf{5\Omega}$$

www.konkur.in

Chapter 6, Solution 48.

Under steady-state, the inductor acts like a short-circuit, while the capacitor acts like an open circuit as shown below.

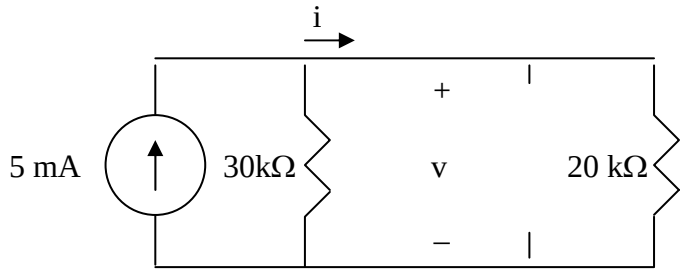

Using current division,

$$i = (30k/(30k+20k))(5mA) = \mathbf{3\ mA}$$

$$v = 20ki = \mathbf{60\ V}$$

www.konkur.in

Chapter 6, Solution 49.

Converting the wye-subnetwork to its equivalent delta gives the circuit below.

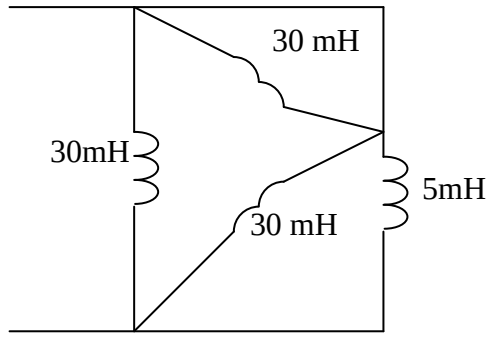

30//0 = 0, 30//5 = 30x5/35=4.286

$$L_{eq} = 30 // 4.286 = \frac{30x4.286}{34.286} = \underline{3.75\ \text{mH}}$$

www.konkur.in

Chapter 6, Solution 50.

16mH in series with 14 mH = 16+14=30 mH
24 mH in series with 36 mH = 24+36=60 mH
30mH in parallel with 60 mH = 30x60/90 = **20 mH**

www.konkur.in

Chapter 6, Solution 51.

$$\frac{1}{L} = \frac{1}{60} + \frac{1}{20} + \frac{1}{30} = \frac{1}{10} \qquad L = 10 \text{ mH}$$

$$L_{eq} = 10 \| (25 + 10) = \frac{10x35}{45}$$

= **7.778 mH**

www.konkur.in

Chapter 6, Solution 52.

Using Fig. 6.74, design a problem to help other students better understand how inductors behave when connected in series and when connected in parallel.

Although there are many ways to work this problem, this is an example based on the same kind of problem asked in the third edition.

Problem

Find L_{eq} in the circuit of Fig. 6.74.

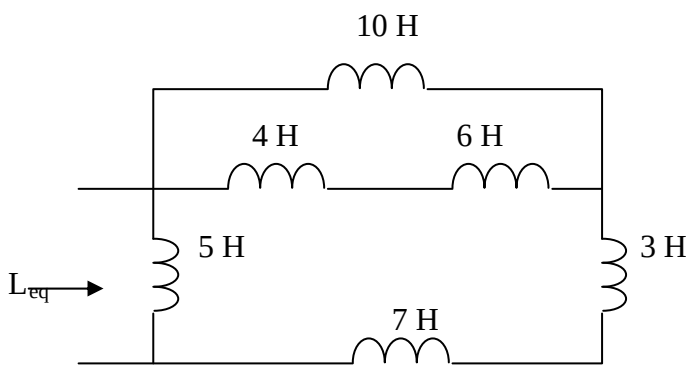

Figure 6.74 For Prob. 6.52.

Solution

$$L_{eq} = 5//(7+3+10//(4+6)) == 5//(7+3+5)) = \frac{5x15}{20} = \underline{3.75\ \ H}$$

www.konkur.in

Chapter 6, Solution 53.

$$L_{eq} = 6 + 10 + 8 \| \left[5 \| (8 + 12) + 6 \| (8 + 4) \right]$$

$$= 16 + 8 \| (4 + 4) = 16 + 4$$

L_{eq} = **20 mH**

www.konkur.in

Chapter 6, Solution 54.

$$L_{eq} = 4 + (9+3)\|(10\|0 + 6\|12)$$

$$= 4 + 12\|(0+4) = 4 + 3$$

L_{eq} = **7H**

www.konkur.in

Chapter 6, Solution 55.

(a) L//L = 0.5L, L + L = 2L

$$L_{eq} = L + 2L // 0.5L = L + \frac{2Lx0.5L}{2L + 0.5L} = \underline{1.4L} = \mathbf{1.4\ L}.$$

(b) L//L = 0.5L, L//L + L//L = L

$$L_{eq} = L//L = \mathbf{500\ mL}$$

www.konkur.in

Chapter 6, Solution 56.

$$L \| L \| L = \frac{1}{\frac{3}{L}} = \frac{L}{3}$$

Hence the given circuit is equivalent to that shown below:

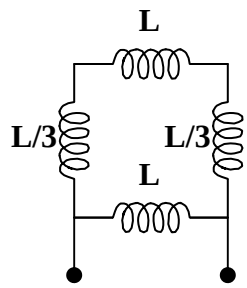

$$L_{eq} = L \left\| \left(L + \frac{2}{3} L \right) \right. = \frac{L x \frac{5}{3} L}{L + \frac{5}{3} L} = \mathbf{\frac{5}{8}} \boldsymbol{L}$$

www.konkur.in

Chapter 6, Solution 57.

$$\text{Let } v = L_{eq}\frac{di}{dt} \qquad (1)$$

$$v = v_1 + v_2 = 4\frac{di}{dt} + v_2 \qquad (2)$$

$$i = i_1 + i_2 \longrightarrow i_2 = i - i_1 \qquad (3)$$

$$v_2 = 3\frac{di_1}{dt} \text{ or } \frac{di_1}{dt} = \frac{v_2}{3} \qquad (4)$$

and

$$-v_2 + 2\frac{di}{dt} + 5\frac{di_2}{dt} = 0$$

$$v_2 = 2\frac{di}{dt} + 5\frac{di_2}{dt} \qquad (5)$$

Incorporating (3) and (4) into (5),

$$v_2 = 2\frac{di}{dt} + 5\frac{di}{dt} - 5\frac{di_1}{dt} = 7\frac{di}{dt} - 5\frac{v_2}{3}$$

$$v_2\left(1 + \frac{5}{3}\right) = 7\frac{di}{dt}$$

$$v_2 = \frac{21}{8}\frac{di}{dt}$$

Substituting this into (2) gives

$$v = 4\frac{di}{dt} + \frac{21}{8}\frac{di}{dt}$$

$$= \frac{53}{8}\frac{di}{dt}$$

Comparing this with (1),

$$L_{eq} = \frac{53}{8} = \mathbf{6.625\ H}$$

www.konkur.in

Chapter 6, Solution 58.

$$v = L\frac{di}{dt} = 3\frac{di}{dt} = 3 \text{ x slope of } i(t).$$

Thus v is sketched below:

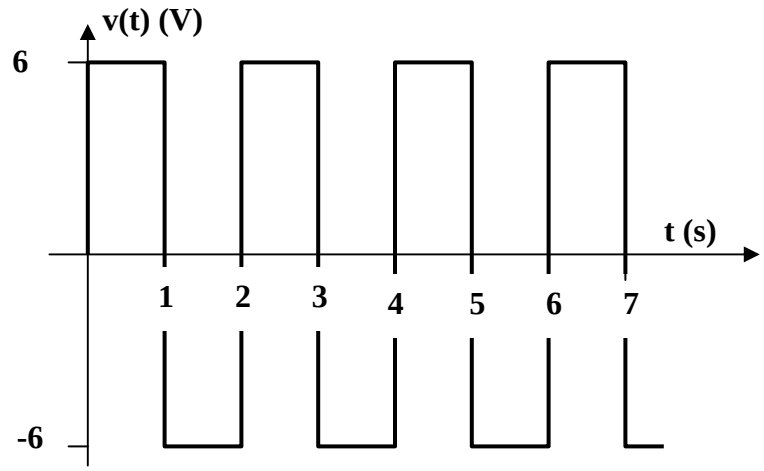

www.konkur.in

Chapter 6, Solution 59.

(a) $v_s = (L_1 + L_2)\dfrac{di}{dt}$

$$\frac{di}{dt} = \frac{v_s}{L_1 + L_2}$$

$$v_1 = L_1\frac{di}{dt},\ \ v_2 = L_2\frac{di}{dt}$$

$$\boldsymbol{v_1 = \frac{L_1}{L_1 + L_2}v_s,\ v_L = \frac{L_2}{L_1 + L_2}v_s}$$

(b) $v_i = v_2 = L_1\dfrac{di_1}{dt} = L_2\dfrac{di_2}{dt}$

$$i_s = i_1 + i_2$$

$$\frac{di_s}{dt} = \frac{di_1}{dt} + \frac{di_2}{dt} = \frac{v}{L_1} + \frac{v}{L_2} = v\frac{(L_1 + L_2)}{L_1L_2}$$

$$i_1 = \frac{1}{L_1}\int v\,dt = \frac{1}{L_1}\int \frac{L_1L_2}{L_1 + L_2}\frac{di_s}{dt}dt = \boldsymbol{\frac{L_2}{L_1 + L_2}i_s}$$

$$i_2 = \frac{1}{L_2}\int v\,dt = \frac{1}{L_2}\int \frac{L_1L_2}{L_1 + L_2}\frac{di_s}{dt}dt = \boldsymbol{\frac{L_1}{L_1 + L_2}i_s}$$

www.konkur.in

Chapter 6, Solution 60

$$L_{eq} = 3//5 = \frac{15}{8}$$

$$v_o = L_{eq}\frac{di}{dt} = \frac{15}{8}\frac{d}{dt}\left(4e^{-2t}\right) = \underline{-15e^{-2t}}$$

$$i_o = \frac{I}{L}\int_0^t v_o(t)dt + i_o(0) = 2 + \frac{1}{5}\int_0^t (-15)e^{-2t}dt = 2 + 1.5e^{-2t}\Big|_0^t$$

$$i_o = \mathbf{(0.5 + 1.5e^{-2t})\ A}$$

www.konkur.in

Chapter 6, Solution 61.

(a) $L_{eq} = 20//(4+6) = 20x10/30 = \underline{6.667\ \text{mH}}$

Using current division,

$$i_1(t) = \frac{10}{10+20} i_s = \underline{e^{-t}\ \text{mA}}$$

$$i_2(t) = \underline{2e^{-t}\ \text{mA}}$$

(b) $v_o = L_{eq}\dfrac{di_s}{dt} = \dfrac{20}{3}x10^{-3}(-3e^{-t}x10^{-3}) = \underline{-20e^{-t}\ \mu\text{V}}$

(c) $w = \dfrac{1}{2}Li_1^2 = \dfrac{1}{2}x20x10^{-3}xe^{-2}x10^{-6} = \underline{1.3534\ \text{nJ}}$

www.konkur.in

Chapter 6, Solution 62.

(a) $L_{eq} = 25 + 20 // 60 = 25 + \dfrac{20x60}{80} = 40 \text{ mH}$

$$v = L_{eq}\frac{di}{dt} \quad \longrightarrow \quad i = \frac{1}{L_{eq}}\int v(t)dt + i(0) = \frac{10^{-3}}{40x10^{-3}}\int_0^t 12e^{-3t}dt + i(0) = -0.1(e^{-3t} - 1) + i(0)$$

Using current division and the fact that all the currents were zero when the circuit was put together, we get,

$$i_1 = \frac{60}{80}i = \frac{3}{4}i, \qquad i_2 = \frac{1}{4}i$$

$$i_1(0) = \frac{3}{4}i(0) \quad \longrightarrow \quad 0.75i(0) = -0.01 \quad \longrightarrow \quad i(0) = -0.01333$$

$$i_2 = \frac{1}{4}(-0.1e^{-3t} + 0.08667) \text{ A} = -25e^{-3t} + 21.67 \text{ mA}$$

$$\boldsymbol{i_2(0) = -25 + 21.67 = \underline{-3.33 \text{ mA}}}$$

(b) $\boldsymbol{i_1 = \frac{3}{4}(-0.1e^{-3t} + 0.08667) \text{ A} = \underline{-75e^{-3t} + 65 \text{ mA}}}$

$$\boldsymbol{i_2 = \underline{-25e^{-3t} + 21.67 \text{ mA}}}$$

www.konkur.in

Chapter 6, Solution 63.

We apply superposition principle and let

$$v_o = v_1 + v_2$$

where v_1 and v_2 are due to i_1 and i_2 respectively.

$$v_1 = L\frac{di_1}{dt} = 2\frac{di_1}{dt} = \begin{cases} 2, & 0 < t < 3 \\ -2, & 3 < t < 6 \end{cases}$$

$$v_2 = L\frac{di_2}{dt} = 2\frac{di_2}{dt} = \begin{cases} 4, & 0 < t < 2 \\ 0, & 2 < t < 4 \\ -4, & 4 < t < 6 \end{cases}$$

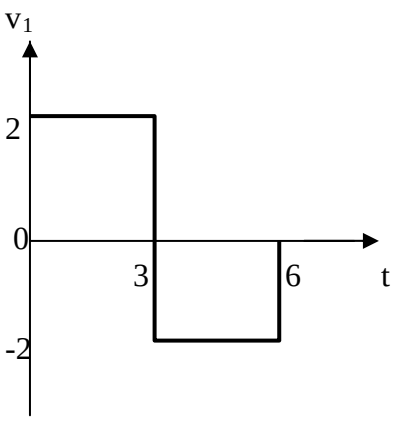

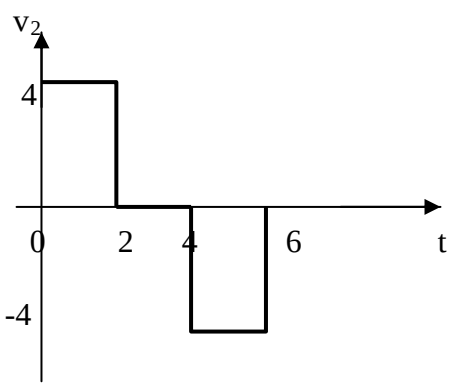

Adding v_1 and v_2 gives v_o, which is shown below.

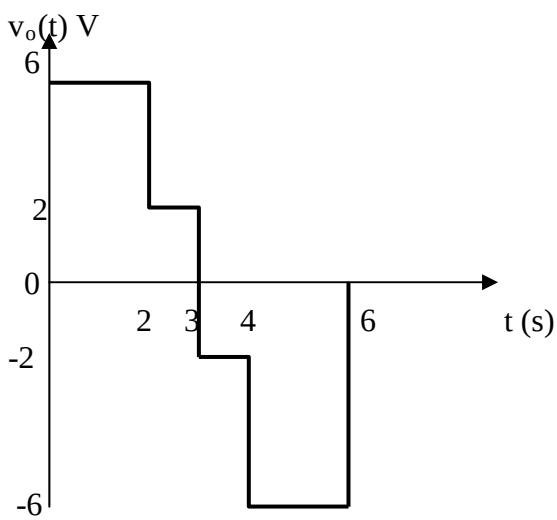

www.konkur.in

Chapter 6, Solution 64.

(a) When the switch is in position A,
i= –6 = i(0)
When the switch is in position B,
$i(\infty) = 12/4 = 3, \qquad \tau = L/R = 1/8$

$$i(t) = i(\infty) + [i(0) - i(\infty)]e^{-t/t}$$

$$i(t) = \mathbf{(3 - 9e^{-8t})\ A}$$

(b) -12 + 4i(0) + v=0, i.e. v = 12 – 4i(0) = **36 V**

(c) At steady state, the inductor becomes a short circuit so that

$$v = \mathbf{0\ V}$$

www.konkur.in

Chapter 6, Solution 65.

(a) $w_5 = \frac{1}{2}L_1 i_1^2 = \frac{1}{2}x5x(4)^2 =$ **40 J**

$w_{20} = \frac{1}{2}(20)(-2)^2 =$ **40 J**

(b) $w = w_5 + w_{20} =$ **80 J**

(c) $i_1 = \frac{1}{L_1}\int_0^t -50e^{-200t}dt + i_1(0) = \frac{1}{5}\left(\frac{1}{200}\right)\left(50e^{-200t}x10^{-3}\right)_0^t + 4$

$= \mathbf{[5x10^{-5}(e^{-200t} - 1) + 4]\ A}$

$i_2 = \frac{1}{L_2}\int_0^t -50e^{-200t}dt + i_2(0) = \frac{1}{20}\left(\frac{1}{200}\right)\left(50e^{-200t}x10^{-3}\right)_0^t - 2$

$= \mathbf{[1.25x10^{-5}\ (e^{-200t} - 1) - 2]\ A}$

(d) $i = i_1 + i_2 = \mathbf{[6.25x10^{-5}\ (e^{-200t} - 1) + 2]\ A}$

www.konkur.in

Chapter 6, Solution 66.

If v=i, then

$$i = L\frac{di}{dt} \longrightarrow \frac{dt}{L} = \frac{di}{i}$$

Integrating this gives

$$\frac{t}{L} = \ln(i) - \ln(C_o) = \ln\left(\frac{i}{C_o}\right) \rightarrow i = C_o e^{t/L}$$

$i(0) = 2 = C_o$

$$i(t) = 2e^{t/0.02} = \mathbf{2e^{50t}\ A}.$$

www.konkur.in

Chapter 6, Solution 67.

$$v_o = -\frac{1}{RC}\int vi\,dt,\ RC = 50 \times 10^3 \times 0.04 \times 10^{-6} = 2 \times 10^{-3}$$

$$v_o = \frac{-10^3}{2}\int 10\sin 50t\ dt$$

$$v_o = \mathbf{100\cos(50t)\ mV}$$

www.konkur.in

Chapter 6, Solution 68.

$$v_o = -\frac{1}{RC}\int vi\,dt + v(0),\ RC = 50 \times 10^3 \times 100 \times 10^{-6} = 5$$

$$v_o = -\frac{1}{5}\int_o^t 10dt + 0 = -2t$$

The op amp will saturate at $v_o = \pm 12$

$-12 = -2t \longrightarrow$ **t = 6s**

www.konkur.in

Chapter 6, Solution 69.

RC = 4 x 10^6 x 1 x 10^{-6} = 4

$$v_o = -\frac{1}{RC}\int v_i dt = -\frac{1}{4}\int v_i dt$$

For 0 < t < 1, v_i = 20, $v_o = -\frac{1}{4}\int_o^t 20dt = -5t$ mV

For 1 < t < 2, v_i = 10, $v_o = -\frac{1}{4}\int_1^t 10dt + v(1) = -2.5(t-1) - 5$

= -2.5t - 2.5mV

For 2 < t < 4, v_i = - 20, $v_o = +\frac{1}{4}\int_2^t 20dt + v(2) = 5(t-2) - 7.5$

= 5t - 17.5 mV

For 4 < t < 5m, v_i = -10, $v_o = \frac{1}{4}\int_4^t 10dt + v(4) = 2.5(t-4) + 2.5$

= 2.5t - 7.5 mV

For 5 < t < 6, v_i = 20, $v_o = -\frac{1}{4}\int_5^t 20dt + v(5) = -5(t-5) + 5$

= - 5t + 30 mV

Thus $v_o(t)$ is as shown below:

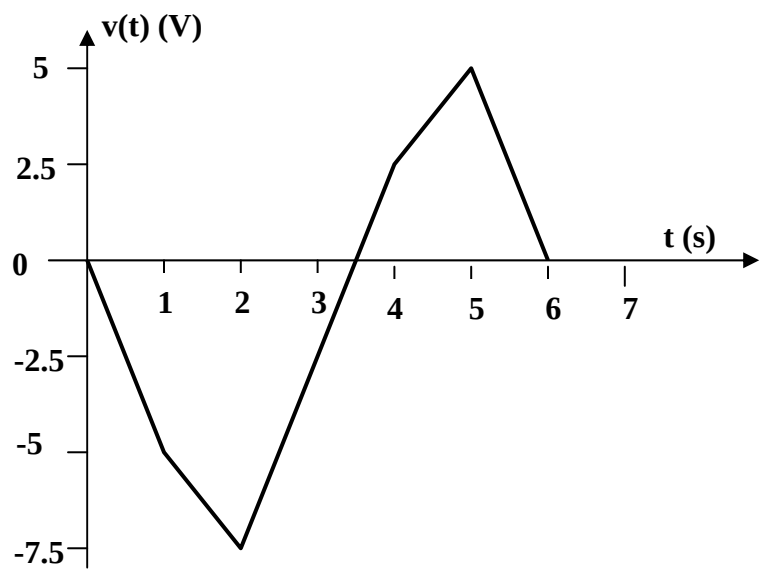

www.konkur.in

Chapter 6, Solution 70.

One possibility is as follows:

$$\frac{1}{RC} = 50$$

Let R = 100 kΩ, $\boldsymbol{C = \frac{1}{50x100x10^3} = 0.2\mu F}$

www.konkur.in

Chapter 6, Solution 71.

By combining a summer with an integrator, we have the circuit below:

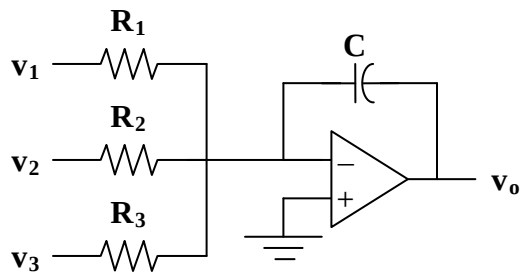

$$v_o = -\frac{1}{R_1C}\int v_1 dt - \frac{1}{R_2C}\int v_2 dt - \frac{1}{R_2C}\int v_2 dt$$

For the given problem, C = **2μF**,

$R_1C = 1 \longrightarrow R_1 = 1/(C) = 10^6/(2) =$ **500 kΩ**
$R_2C = 1/(4) \longrightarrow R_2 = 1/(4C) = 500k\Omega/(4) =$ **125 kΩ**
$R_3C = 1/(10) \longrightarrow R_3 = 1/(10C) =$ **50 kΩ**

www.konkur.in

Chapter 6, Solution 72.

The output of the first op amp is

$$v_1 = -\frac{1}{RC}\int v_i\, dt = -\frac{1}{10x10^3 x2x10^{-6}}\int_o^t v_i dt = -\frac{100t}{2}$$

$$= -50t$$

$$v_o = -\frac{1}{RC}\int v_i\, dt = -\frac{1}{20x10^3 x0.5x10^{-6}}\int_o^t (-50t)dt$$

$$= 2500t^2$$

At t = 1.5ms,

$$v_o = 2500(1.5)^2 x10^{-6} = \mathbf{5.625\ mV}$$

www.konkur.in

Chapter 6, Solution 73.

Consider the op amp as shown below:

Let $v_a = v_b = v$

At node a, $\frac{0 - v}{R} = \frac{v - v_o}{R} \longrightarrow \mathbf{2v - v_o = 0}$ (1)

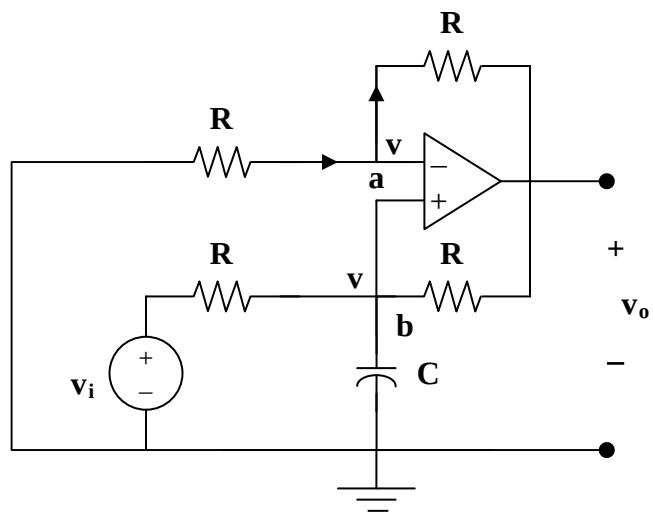

At node b, $\frac{v_i - v}{R} = \frac{v - v_o}{R} + C\frac{dv}{dt}$

$$v_i = 2v - v_o + RC\frac{dv}{dt} \quad (2)$$

Combining (1) and (2),

$$v_i = v_o - v_o + \frac{RC}{2}\frac{dv_o}{dt}$$

or

$$v_o = \frac{2}{RC}\int v_i \, dt$$

showing that the circuit is a noninverting integrator.

www.konkur.in

Chapter 6, Solution 74.

RC = 0.01 x 20 x 10^{-3} sec

$$v_o = -RC\frac{dv_i}{dt} = -0.2\frac{dv}{dt}\,\text{msec}$$

$$v_o = \begin{cases} -2V, & 0 < t < 1 \\ 2V, & 1 < t < 3 \\ -2V, & 3 < t < 4 \end{cases}$$

Thus $v_o(t)$ is as sketched below:

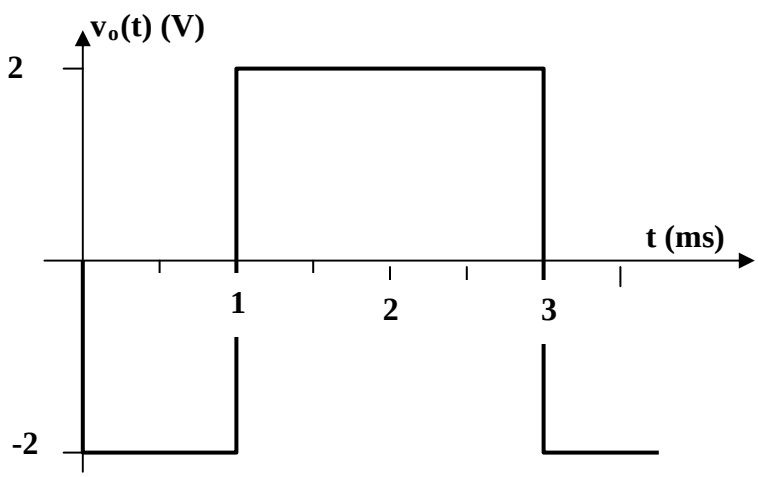

www.konkur.in

Chapter 6, Solution 75.

$$v_0 = -RC\frac{dv_i}{dt}, \quad RC = 250x10^3 x10x10^{-6} = 2.5$$

$$v_o = -2.5\frac{d}{dt}(12t) = \mathbf{-30\ mV}$$

www.konkur.in

Chapter 6, Solution 76.

$$v_o = -RC\frac{dv_i}{dt}, \quad RC = 50 \text{ x } 10^3 \text{ x } 10 \text{ x } 10^{-6} = 0.5$$

$$v_o = -0.5\frac{dv_i}{dt} = \begin{cases} -10, & 0 < t < 5 \\ 5, & 5 < t < 15 \end{cases}$$

The input is sketched in Fig. (a), while the output is sketched in Fig. (b).

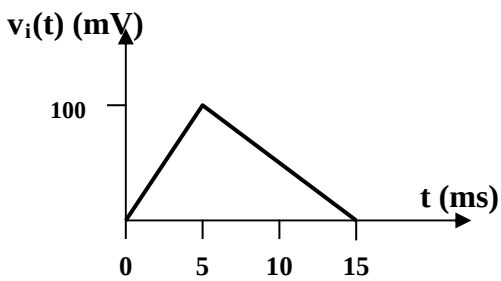

(a)

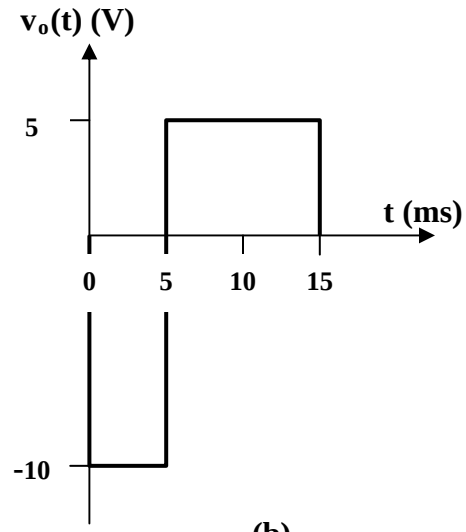

(b)

www.konkur.in

Chapter 6, Solution 77.

$i = i_R + i_C$

$$\frac{v_i - 0}{R} = \frac{0 - v_0}{R_F} + C\frac{d}{dt}(0 - v_o)$$

$$R_F C = 10^6 x 10^{-6} = 1$$

Hence $v_i = -\left(v_o + \frac{dv_o}{dt}\right)$

Thus v_i is obtained from v_o as shown below:

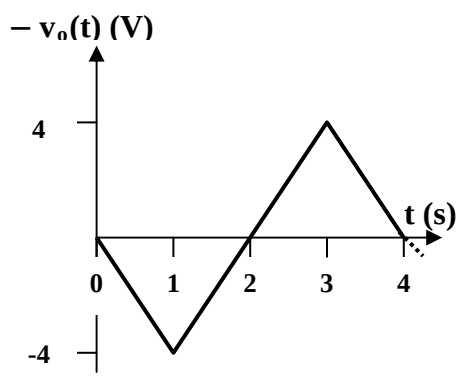

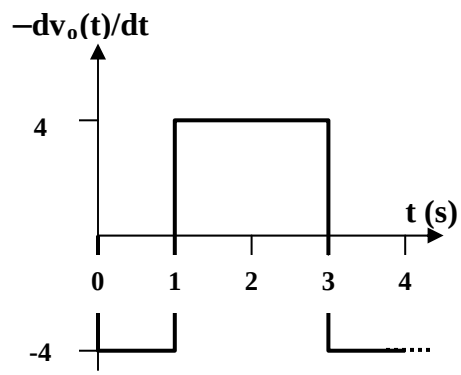

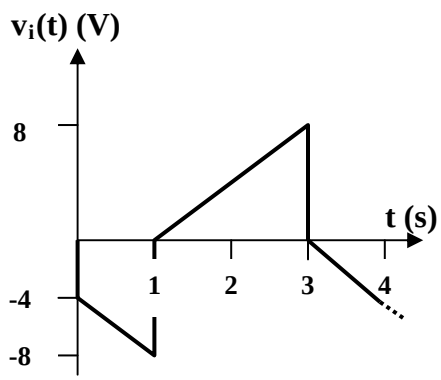

www.konkur.in

Chapter 6, Solution 78.

$$\frac{d^2v_o}{dt} = 10\sin 2t - \frac{2dv_o}{dt} - v_o$$

Thus, by combining integrators with a summer, we obtain the appropriate analog computer as shown below:

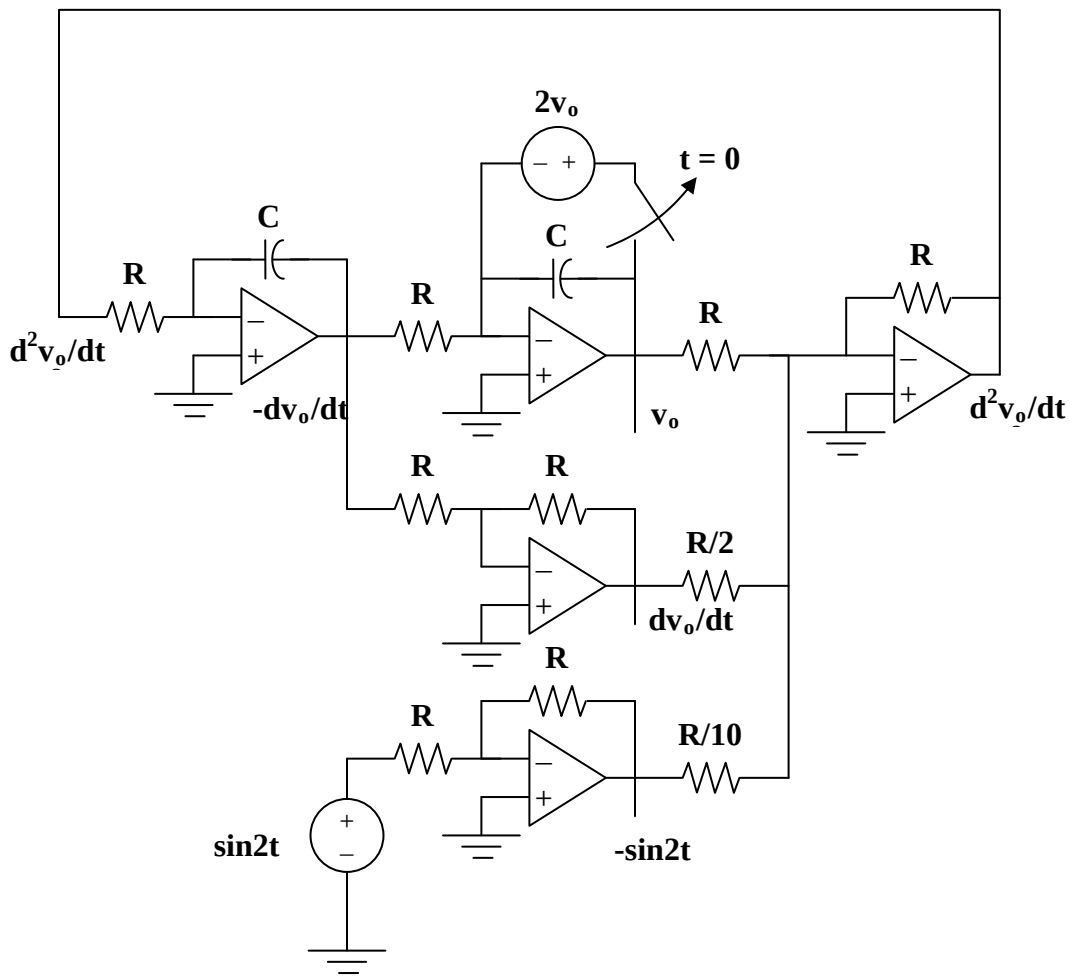

www.konkur.in

Chapter 6, Solution 79.

We can write the equation as

$$\frac{dy}{dt} = f(t) - 4y(t)$$

which is implemented by the circuit below.

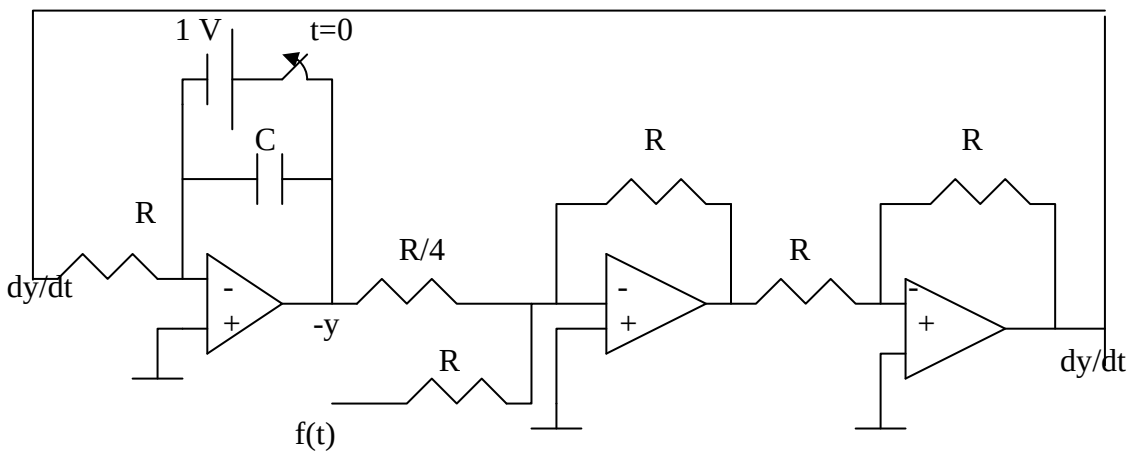

www.konkur.in

Chapter 6, Solution 80.

From the given circuit,

$$\frac{d^2 v_o}{dt^2} = f(t) - \frac{1000k\Omega}{5000k\Omega} v_o - \frac{1000k\Omega}{200k\Omega}\frac{dv_o}{dt}$$

or

$$\boldsymbol{\frac{d^2 v_o}{dt^2} + 5\frac{dv_o}{dt} + 2v_o = f(t)}$$

www.konkur.in

Chapter 6, Solution 81

We can write the equation as

$$\frac{d^2v}{dt^2} = -5v - 2f(t)$$

which is implemented by the circuit below.

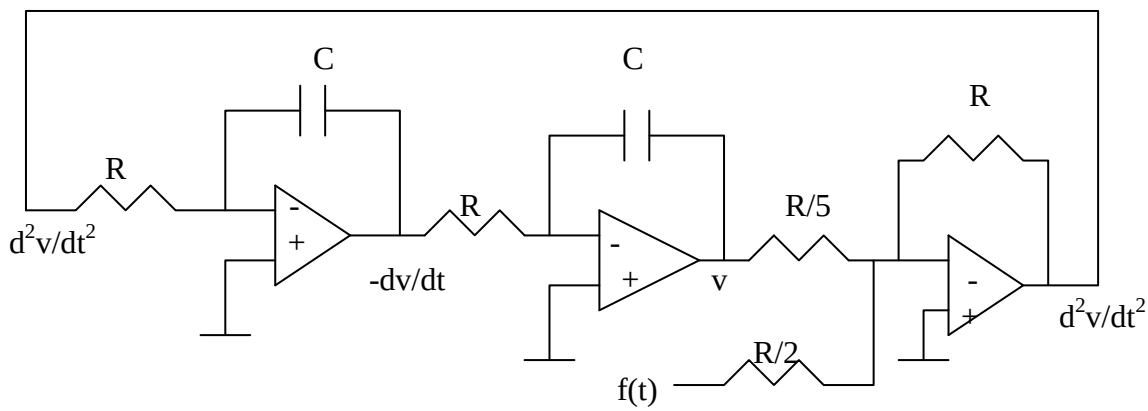

www.konkur.in

Chapter 6, Solution 82

The circuit consists of a summer, an inverter, and an integrator. Such circuit is shown below.

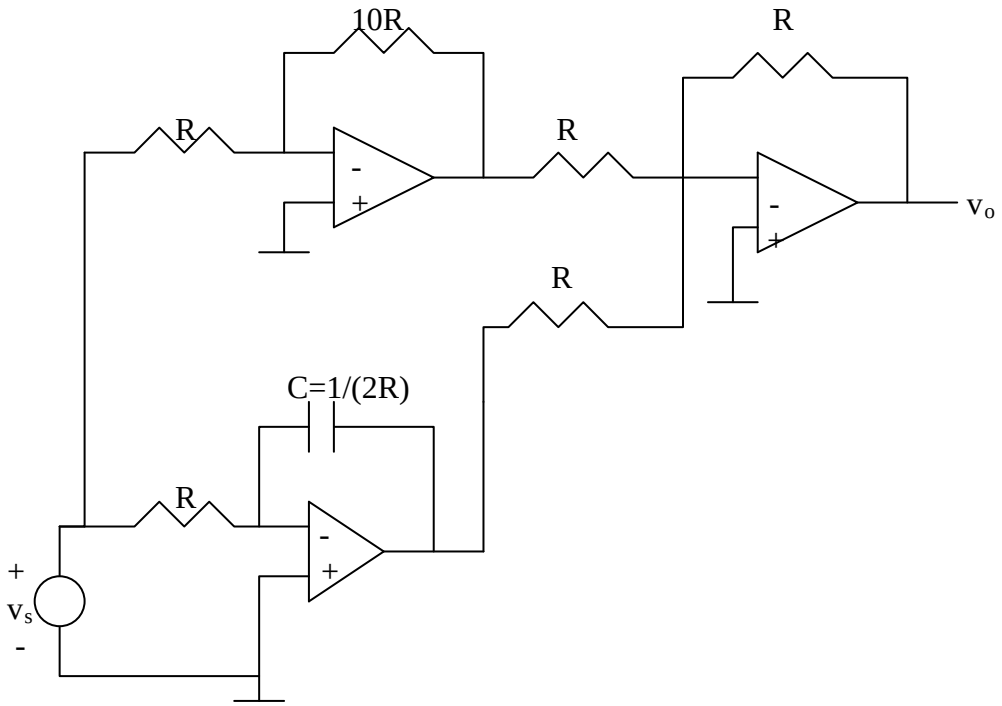

www.konkur.in

Chapter 6, Solution 83.

Since two 10μF capacitors in series gives 5μF, rated at 600V, it requires 8 groups in parallel with each group consisting of two capacitors in series, as shown below:

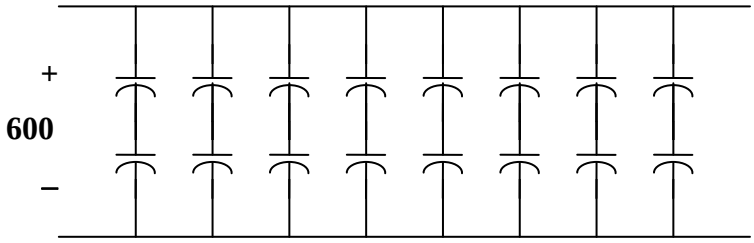

Answer: **8 groups in parallel with each group made up of 2 capacitors in series.**

www.konkur.in

Chapter 6, Solution 84.

$v = L(di/dt) = 8x10^{-3}x5x2\pi\sin(\pi t)\cos(\pi t)10^{-3} = 40\pi\sin(2\pi t)\ \mu V$

$p = vi = 40\pi\sin(2\pi t)5\sin^2(\pi t)10^{-9}$ W, at t=0 p = **0W**

$$w = \frac{1}{2}Li^2 = \frac{1}{2}x8x10^{-3}x[5\sin^2(\pi/2)x10^{-3}]^2 = 4x25x10^{-9} = \underline{100\ nJ}$$

$$= \mathbf{100\ \eta J}$$

www.konkur.in

Chapter 6, Solution 85.

It is evident that differentiating i will give a waveform similar to v. Hence,

$$v = L\frac{di}{dt}$$

$$i = \begin{cases} 4t, 0 < t < 1ms \\ 8 - 4t, 1 < t < 2ms \end{cases}$$

$$v = L\left[\frac{di}{dt} = \begin{cases} 4000L, 0 < t < 1ms \\ -4000L, 1 < t < 2ms \end{cases}\right]$$

But, $$v = \begin{cases} 5V, 0 < t < 1ms \\ -5V, 1 < t < 2ms \end{cases}$$

Thus, 4000L = 5 $\longrightarrow$ L = 1.25 mH in a **1.25 mH inductor**

www.konkur.in

Chapter 6, Solution 86.

$$v = v_R + v_L = Ri + L\frac{di}{dt} = 12x2te^{-10t} + 200x10^{-3}x(-20te^{-10t} + 2e^{-10t}) = \underline{(0.4 - 20t)e^{-10t}\ \text{V}}$$

www.konkur.in

Chapter 7, Solution 1.

(a) τ=RC = 1/200

For the resistor, V=iR= $56e^{-200t} = 8Re^{-200t}\, x10^{-3}$ $\longrightarrow$ $R = \frac{56}{8} = \underline{7\ k\Omega}$

$$C = \frac{1}{200R} = \frac{1}{200X7X10^3} = \underline{0.7143\mu F}$$

(b) τ =1/200= **5 ms**

(c) If value of the voltage at = 0 is 56 .

$$\frac{1}{2}x56 = 56e^{-200t} \longrightarrow e^{200t} = 2$$

$$200t_o = \ln 2 \longrightarrow t_o = \frac{1}{200}\ln 2 = \underline{3.466\ ms}$$

www.konkur.in

Chapter 7, Solution 2.

$\tau = R_{th}C$

where R_{th} is the Thevenin equivalent at the capacitor terminals.

$$R_{th} = 120 \,||\, 80 + 12 = 60\ \Omega$$

$$\tau = 60 \times 200 \times 10^{-3} = \mathbf{12\ s}.$$

www.konkur.in

Chapter 7, Solution 3.

R = 10 +20//(20+30) =10 + 40x50/(40 + 50)=32.22 kΩ

$$\tau = RC = 32.22X10^{3}X100X10^{-12} = \underline{3.222\ \mu S}$$

www.konkur.in

Chapter 7, Solution 4.

For t<0, $v(0^-)$=40 V.

For t >0. we have a source-free RC circuit.

$$\tau = RC = 2x10^3 x10x10^{-6} = 0.02$$

$$v(t) = v(0)e^{-t/\tau} = \underline{40e^{-50t}\ \text{V}}$$

www.konkur.in

Chapter 7, Solution 5.

Using Fig. 7.85, design a problem to help other students to better understand source-free RC circuits.

Although there are many ways to work this problem, this is an example based on the same kind of problem asked in the third edition.

Problem

For the circuit shown in Fig. 7.85, find i(t), t>0.

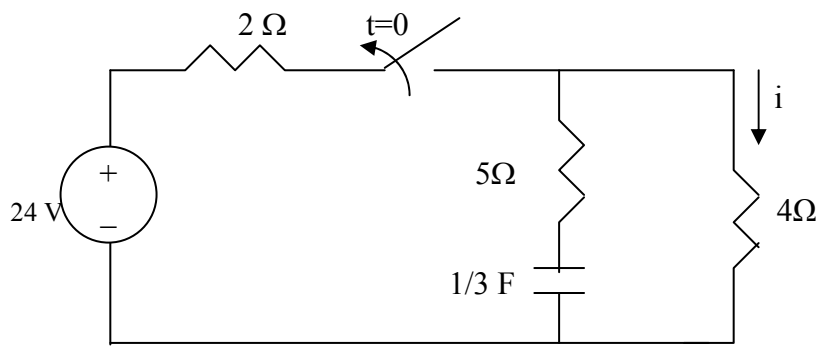

Figure 7.85 For Prob. 7.5.

Solution

Let v be the voltage across the capacitor.
For t <0,

$$v(0^-) = \frac{4}{2+4}(24) = 16 \text{ V}$$

For t >0, we have a source-free RC circuit as shown below.

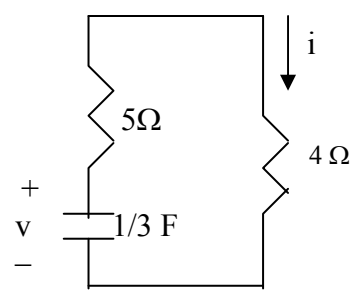

$$\tau = RC = (4+5)\frac{1}{3} = 3s$$

www.konkur.in

$$v(t) = v(0)e^{-t/\tau} = 16e^{-t/3}\ \text{V}$$

$$i(t) = -C\frac{dv}{dt} = -\frac{1}{3}(-\frac{1}{3})16e^{-t/3} = \underline{1.778e^{-t/3}\ \text{A}}$$

www.konkur.in

Chapter 7, Solution 6.

$$v_o = v(0) = \frac{2}{10+2}(40) = 6.667\,V$$

$$v(t) = v_o e^{-t/\tau},\ \ \tau = RC = 40x10^{-6}x2x10^{3} = \frac{2}{25}$$

$$v(t) = \underline{6.667e^{-12.5t}V}$$

www.konkur.in

Chapter 7, Solution 7.

Assuming that the switch in Fig. 7.87 has been in position A for a long time and is moved to position B at t=0. Then at t = 1second, the switch moves from B to C. Find $v_C(t)$ for $t \geq 0$.

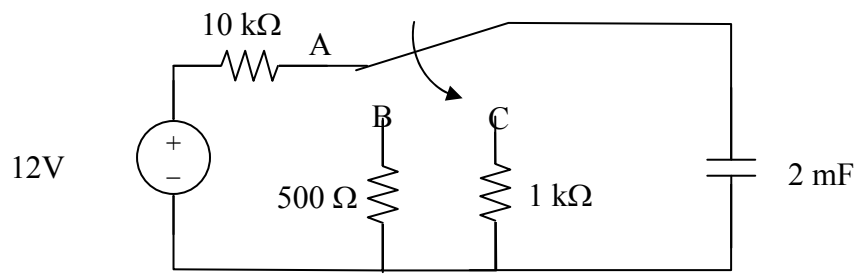

Figure 7.87
For Prob. 7.7

Solution

Step 1. Determine the initial voltage on the capacitor. Clearly it charges to 12 volts when the switch is at position A because the circuit has reached steady state.

This then leaves us with two simple circuits, the first a 500 Ω resistor in series with a 2 mF capacitor and an initial charge on the capacitor of 12 volts. The second circuit which exists from t = 1 sec to infinity. The initial condition for the second circuit will be $v_C(1)$ from the first circuit. The time constant for the first circuit is (500)(0.002) = 1 sec and the time constant for the second circuit is (1,000)(0.002) = 2 sec. $v_C(\infty) = 0$ for both circuits.

Step 1.

$$v_C(t) = \mathbf{12e^{-t}}\ \textbf{volts for } 0 < t < 1 \text{ sec and } = 12e^{-1}e^{-2(t-1)} \text{ at } t = 1 \text{ sec, and}$$

$$= \mathbf{4.415e^{-2(t-1)}}\ \textbf{volts for } 1 \text{ sec} < t < \infty.$$

$$\mathbf{12e^{-t}}\ \textbf{volts for } 0 < t < 1 \text{ sec, } \mathbf{4.415e^{-2(t-1)}}\ \textbf{volts for } 1 \text{ sec} < t < \infty.$$

www.konkur.in

Chapter 7, Solution 8.

(a) $\tau = RC = \frac{1}{4}$

$-i = C\frac{dv}{dt}$

$-0.2e^{-4t} = C(10)(-4)e^{-4t} \longrightarrow C = \mathbf{5\ mF}$

$R = \frac{1}{4C} = \mathbf{50\ \Omega}$

(b) $\tau = RC = \frac{1}{4} = \mathbf{0.25\ s}$

(c) $w_C(0) = \frac{1}{2}CV_0^2 = \frac{1}{2}(5\times10^{-3})(100) = \mathbf{250\ mJ}$

(d) $w_R = \frac{1}{2}\times\frac{1}{2}CV_0^2 = \frac{1}{2}CV_0^2\left(1-e^{-2t_0/\tau}\right)$

$0.5 = 1 - e^{-8t_0} \longrightarrow e^{-8t_0} = \frac{1}{2}$

or $e^{8t_0} = 2$

$t_0 = \frac{1}{8}\ln(2) = \mathbf{86.6\ ms}$

www.konkur.in

Chapter 7, Solution 9.

For t < 0, the switch is closed so that

$$v_o(0) = \frac{4}{2+4}(6) = 4 \text{ V}$$

For t >0, we have a source-free RC circuit.

$$\tau = RC = 3x10^{-3} x4x10^{3} = 12s$$

$$v_o(t) = v_o(0)e^{-t/\tau} = \mathbf{4e^{-t/12}\ V}.$$

www.konkur.in

Chapter 7, Solution 10.

For t<0, $v(0^-) = \frac{3}{3+9}(36V) = \underline{9\ V}$

For t>0, we have a source-free RC circuit

$$\tau = RC = 3x10^3 x20x10^{-6} = 0.06s$$

$$v_o(t) = \mathbf{9e^{-16.667t}\ V}$$

Let the time be t_o.

$3 = 9e^{-16.667to}$ or $e^{16.667to} = 9/3 = 3$

$t_o = \ln(3)/16.667 =$ **65.92 ms**.

www.konkur.in

Chapter 7, Solution 11.

For t<0, we have the circuit shown below.

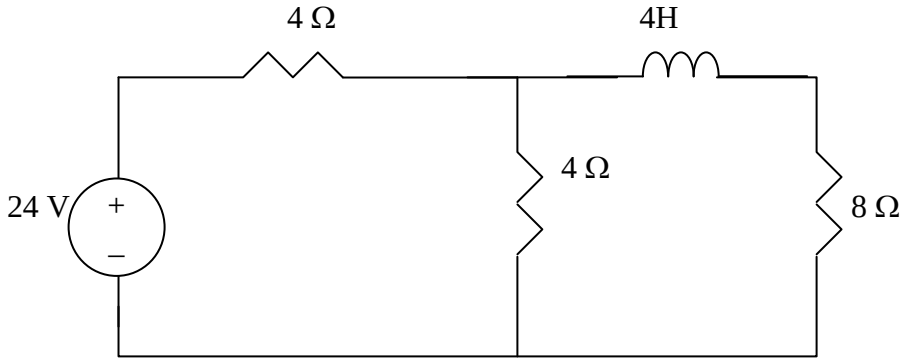

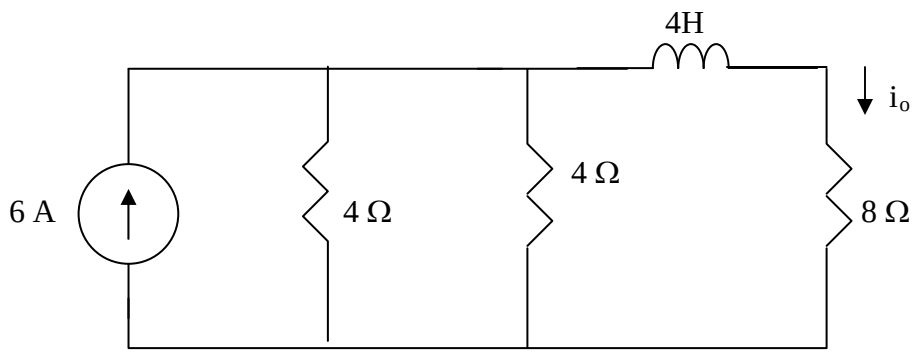

4||4= 4x4/8=2
$i_o(0^-) = [2/(2+8)]6 = 1.2$ A

For t >0, we have a source-free RL circuit.

$\tau = \frac{L}{R} = \frac{4}{4+8} = 1/3$ thus,

$i_o(t) = \mathbf{1.2e^{-3t}}$ **A**.

www.konkur.in

Chapter 7, Solution 12.

Using Fig. 7.92, design a problem to help other students better understand source-free RL circuits.

Although there are many ways to work this problem, this is an example based on the same kind of problem asked in the third edition.

Problem

The switch in the circuit in Fig. 7.90 has been closed for a long time. At $t = 0$, the switch is opened. Calculate $i(t)$ for $t > 0$.

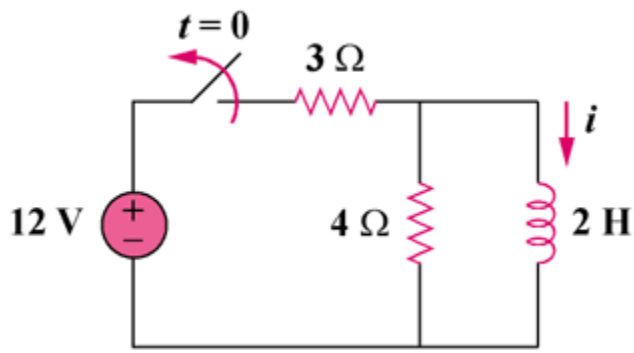

Figure 7.90

Solution

When t < 0, the switch is closed and the inductor acts like a short circuit to dc. The 4 Ω resistor is short-circuited so that the resulting circuit is as shown in Fig. (a).

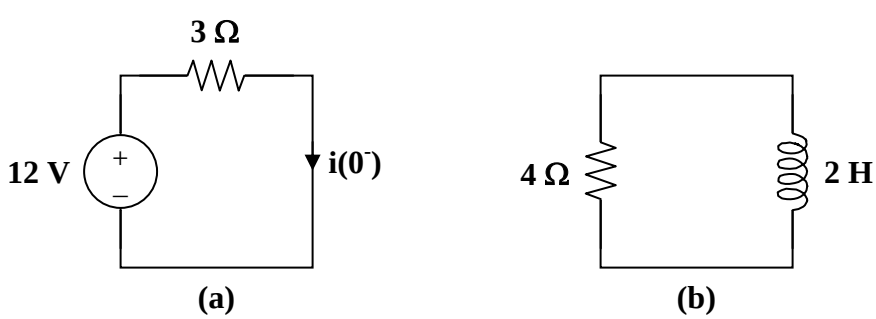

$$i(0^-) = \frac{12}{3} = 4 \text{ A}$$

Since the current through an inductor cannot change abruptly,

$$i(0) = i(0^-) = i(0^+) = 4 \text{ A}$$

www.konkur.in

When t > 0, the voltage source is cut off and we have the RL circuit in Fig. (b).

$$\tau = \frac{L}{R} = \frac{2}{4} = 0.5$$

Hence,

$$i(t) = i(0)\,e^{-t/\tau} = \mathbf{4e^{-2t}\ A}$$

www.konkur.in

Chapter 7, Solution 13.

(a) $\tau = \frac{1}{10^3} = 1ms$ = **1 ms**.

$v(t) = i(t)R = 80e^{-1000t}$ V = $R5e^{-1000t}x10^{-3}$ or R = 80,000/5 = **16 kΩ**.

But $\tau = L/R = 1/10^3$ or $L = 16x10^3/10^3$ = **16 H**.

(b) The energy dissipated in the resistor is

$$w = \int_0^{0.0008} p\,dt = \int_0^{0.0008} 0.4e^{-2000t}dt = -\frac{0.4}{2000}e^{-2000t}\Big|_0^{0.0008}$$

$$= 200(1-e^{-1})x10^{-6} = \mathbf{126.42\ \mu J}.$$

(a) **16 kΩ, 16 H, 1 ms** **(b) 126.42 μJ**

www.konkur.in

Chapter 7, Solution 14.

$$R_{Th} = (40+20)//(10+30) = \frac{60x40}{100} = 24k\Omega$$

$$\tau = L/R = \frac{5x10^{-3}}{24x10^{3}} = \underline{0.2083\mu s}$$

www.konkur.in

Chapter 7, Solution 15

(a) $R_{Th} = 2 + 10 // 40 = 10\Omega, \qquad \tau = \dfrac{L}{R_{Th}} = 5/10 = \underline{0.5s}$

(b) $R_{Th} = 40 // 160 + 48 = 40\Omega, \qquad \tau = \dfrac{L}{R_{Th}} = (20x10^{-3})/80 = \underline{0.25\,\text{ms}}$

(a) **10 Ω, 500 ms** **(b) 40 Ω, 250 μs**

www.konkur.in

Chapter 7, Solution 16.

$$\tau = \frac{L_{eq}}{R_{eq}}$$

(a) $L_{eq} = L$ and $R_{eq} = R_2 + \frac{R_1 R_3}{R_1 + R_3} = \frac{R_2(R_1 + R_3) + R_1 R_3}{R_1 + R_3}$

$$\tau = \frac{\mathbf{L(R_1 + R_3)}}{\mathbf{R_2(R_1 + R_3) + R_1 R_3}}$$

(b) where $L_{eq} = \frac{L_1 L_2}{L_1 + L_2}$ and $R_{eq} = R_3 + \frac{R_1 R_2}{R_1 + R_2} = \frac{R_3(R_1 + R_2) + R_1 R_2}{R_1 + R_2}$

$$\tau = \frac{\mathbf{L_1 L_2 (R_1 + R_2)}}{\mathbf{(L_1 + L_2)(R_3(R_1 + R_2) + R_1 R_2)}}$$

www.konkur.in

Chapter 7, Solution 17.

$$i(t) = i(0)\,e^{-t/\tau}, \qquad \tau = \frac{L}{R_{eq}} = \frac{1/4}{4} = \frac{1}{16}$$

$$i(t) = 6e^{-16t}$$

$$v_o(t) = 3i + L\frac{di}{dt} = 18e^{-16t} + (1/4)(-16)\,6e^{-16t}$$

$$v_o(t) = \mathbf{-6e^{-16t}u(t)\ V}$$

www.konkur.in

Chapter 7, Solution 18.

If $v(t) = 0$, the circuit can be redrawn as shown below.

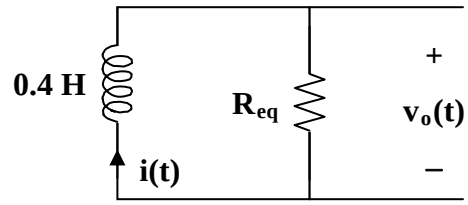

$$R_{eq} = 2 \,||\, 3 = \frac{6}{5}, \qquad \tau = \frac{L}{R} = \frac{2}{5} \times \frac{5}{6} = \frac{1}{3}$$

$$i(t) = i(0)\, e^{-t/\tau} = 5e^{-3t}$$

$$v_o(t) = -L\frac{di}{dt} = \frac{-2}{5}(-3)5e^{-3t} = \mathbf{6\, e^{-3t}\ V}$$

www.konkur.in

Chapter 7, Solution 19.

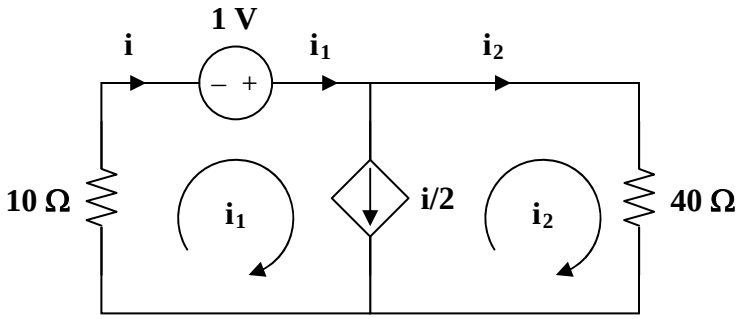

To find R_{th} we replace the inductor by a 1-V voltage source as shown above.

$$10i_1 - 1 + 40i_2 = 0$$

But $\quad i = i_2 + i/2 \quad$ and $\quad i = i_1$

i.e. $\quad i_1 = 2i_2 = i$

$$10i - 1 + 20i = 0 \longrightarrow i = \frac{1}{30}$$

$$R_{th} = \frac{1}{i} = 30\,\Omega$$

$$\tau = \frac{L}{R_{th}} = \frac{6}{30} = 0.2\text{ s}$$

$$i(t) = 6e^{-5t}u(t)\ A$$

www.konkur.in

Chapter 7, Solution 20.

(a) $\tau = \frac{L}{R} = \frac{1}{50} \longrightarrow R = 50L$

$v = -L\frac{di}{dt}$

$90e^{-50t} = -L(30)(-50)e^{-50t} \longrightarrow L = \mathbf{60\ mH}$

$R = 50L = \mathbf{3\ \Omega}$

(b) $\tau = \frac{L}{R} = \frac{1}{50} = \mathbf{20\ ms}$

(c) $w = \frac{1}{2}Li^2(0) = \frac{1}{2}(0.06)(30)^2 = \mathbf{27\ J}$

The value of the energy remaining at 10 ms is given by:

$w_{10} = 0.03(30e^{-0.5})^2 = 0.03(18.196)^2 = 9.933$ J.

So, the fraction of the energy dissipated in the first 10 ms is given by:

(27–9.933)/27 = 0.6321 or **63.21%**.

www.konkur.in

Chapter 7, Solution 21.

The circuit can be replaced by its Thevenin equivalent shown below.

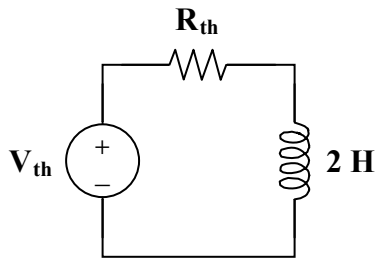

$$V_{th} = \frac{80}{80+40}(60) = 40 \text{ V}$$

$$R_{th} = 40 \,||\, 80 + R = \frac{80}{3} + R$$

$$I = i(0) = i(\infty) = \frac{V_{th}}{R_{th}} = \frac{40}{80/3 + R}$$

$$w = \frac{1}{2} L I^2 = \frac{1}{2}(2)\left(\frac{40}{R + 80/3}\right)^2 = 1$$

$$\frac{40}{R + 80/3} = 1 \quad \longrightarrow \quad R = \frac{40}{3}$$

R = **13.333 Ω**

www.konkur.in

Chapter 7, Solution 22.

$$i(t) = i(0)\,e^{-t/\tau}, \qquad \tau = \frac{L}{R_{eq}}$$

$$R_{eq} = 5 \,||\, 20 + 1 = 5\,\Omega, \qquad \tau = \frac{2}{5}$$

$$i(t) = \mathbf{10e^{-2.5t}\ A}$$

Using current division, the current through the 20 ohm resistor is

$$i_o = \frac{5}{5+20}(-i) = \frac{-i}{5} = -2\,e^{-2.5t}$$

$$v(t) = 20\,i_o = \mathbf{-40e^{-2.5t}\ V}$$

www.konkur.in

Chapter 7, Solution 23.

Since the 2 Ω resistor, 1/3 H inductor, and the (3+1) Ω resistor are in parallel, they always have the same voltage.

$$-i = \frac{10}{2} + \frac{10}{3+1} = 7.5 \quad \longrightarrow \quad i(0) = -7.5$$

The Thevenin resistance R_{th} at the inductor's terminals is

$$R_{th} = 2 \,||\, (3+1) = \frac{4}{3}, \qquad \tau = \frac{L}{R_{th}} = \frac{1/3}{4/3} = \frac{1}{4}$$

$$i(t) = i(0)e^{-t/\tau} = -7.5e^{-4t}, \quad t > 0$$

$$v_L = v_o = L\frac{di}{dt} = -7.5(-4)(1/3)e^{-4t}$$

$$v_o = \mathbf{10e^{-4t}\ V, \quad t > 0}$$

$$v_x = \frac{1}{3+1}v_L = \mathbf{2.5\,e^{-4t}\ V, \quad t > 0}$$

www.konkur.in

Chapter 7, Solution 24.

(a) $v(t) = \mathbf{-5u(t)}$

(b) $i(t) = -10\left[u(t) - u(t-3)\right] + 10\left[u(t-3) - u(t-5)\right]$

$$= \mathbf{-10u(t) + 20u(t-3) - 10u(t-5)}$$

(c) $x(t) = (t-1)\left[u(t-1) - u(t-2)\right] + \left[u(t-2) - u(t-3)\right]$
$+ (4-t)\left[u(t-3) - u(t-4)\right]$
$= (t-1)u(t-1) - (t-2)u(t-2) - (t-3)u(t-3) + (t-4)u(t-4)$
$= \mathbf{r(t-1) - r(t-2) - r(t-3) + r(t-4)}$

(d) $y(t) = 2u(-t) - 5\left[u(t) - u(t-1)\right]$
$= \mathbf{2u(-t) - 5u(t) + 5u(t-1)}$

www.konkur.in

Chapter 7, Solution 25.

Design a problem to help other students to better understand singularity functions.

Although there are many ways to work this problem, this is an example based on the same kind of problem asked in the third edition.

Problem

Sketch each of the following waveforms.

(a) $i(t) = [u(t–2)+u(t+2)]$ A

(b) $v(t) = [r(t) – r(t–3) + 4u(t–5) – 8u(t–8)]$ V

Solution

The waveforms are sketched below.

(a)

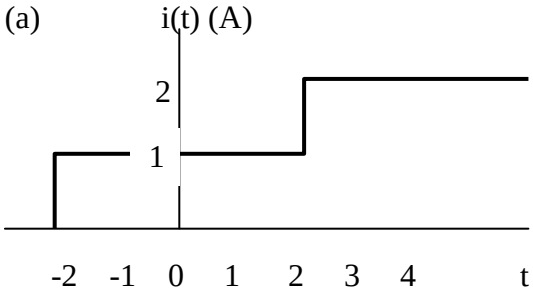

(b)

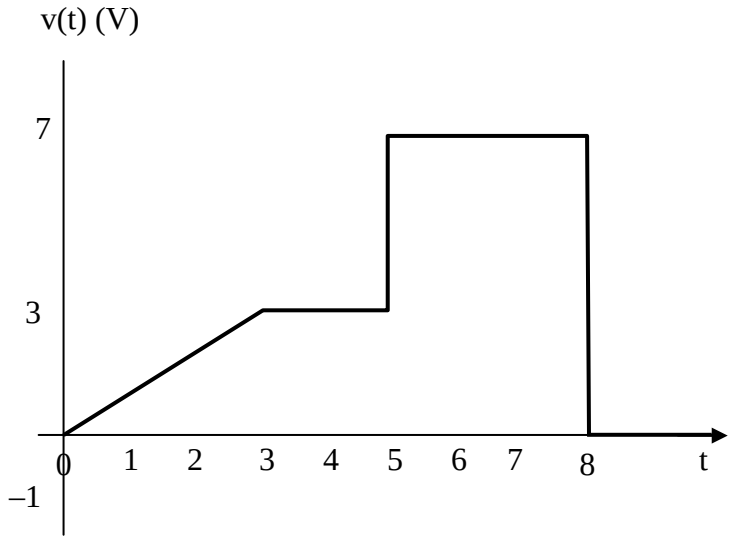

www.konkur.in

Chapter 7, Solution 26.

(a) $v_1(t) = u(t+1) - u(t) + \left[u(t-1) - u(t) \right]$

$v_1(t) = \mathbf{u(t+1) - 2u(t) + u(t-1)}$

(b) $v_2(t) = (4-t)\left[u(t-2) - u(t-4) \right]$

$v_2(t) = -(t-4)\,u(t-2) + (t-4)\,u(t-4)$

$v_2(t) = \mathbf{2u(t-2) - r(t-2) + r(t-4)}$

(c) $v_3(t) = 2\left[u(t-2) - u(t-4) \right] + 4\left[u(t-4) - u(t-6) \right]$

$v_3(t) = \mathbf{2u(t-2) + 2u(t-4) - 4u(t-6)}$

(d) $v_4(t) = -t\left[u(t-1) - u(t-2) \right] = -t\,u(t-1) + t\,u(t-2)$

$v_4(t) = (-t+1-1)\,u(t-1) + (t-2+2)\,u(t-2)$

$v_4(t) = \mathbf{-r(t-1) - u(t-1) + r(t-2) + 2u(t-2)}$

www.konkur.in

Chapter 7, Solution 27.

$$v(t) = \mathbf{[5u(t+1)+10u(t)-25u(t-1)+15u(t-2)]\ V}$$

www.konkur.in

Chapter 7, Solution 28.

$i(t)$ is sketched below.

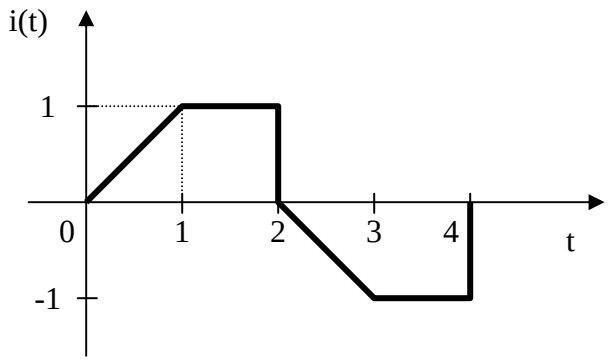

www.konkur.in

Chapter 7, Solution 29

(a)

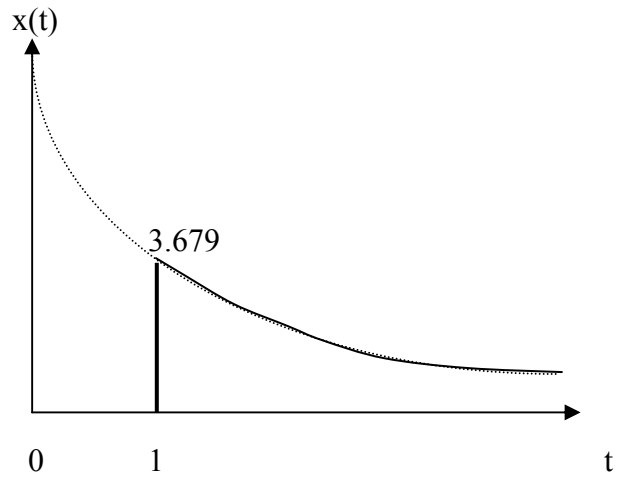

(b)

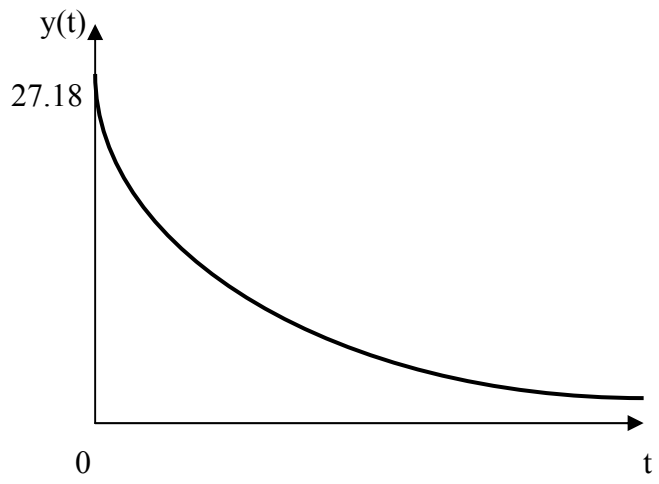

(c) $z(t) = \cos 4t\delta(t-1) = \cos 4\delta(t-1) = -0.6536\delta(t-1)$, which is sketched below.

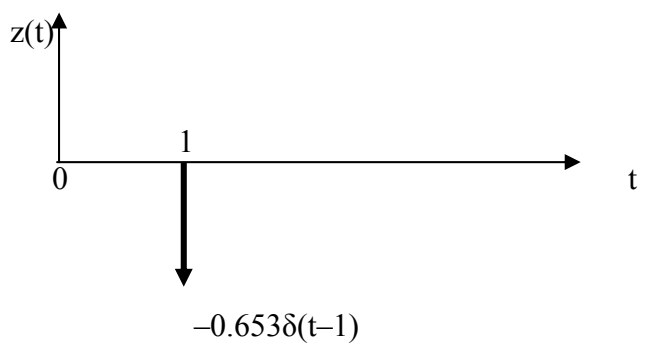

www.konkur.in

Chapter 7, Solution 30.

(a) $\int_{-\infty}^{\infty} 4t^2\,\delta(t-1)\,dt = 4t^2\big|_{t=1} = \mathbf{4}$

(b) $\int_{-\infty}^{\infty} 4t^2\cos(2\pi t)\,\delta(t-0.5)\,dt = 4t^2\cos(2\pi t)\big|_{t=0.5} = \cos\pi = \mathbf{-1}$

www.konkur.in

Chapter 7, Solution 31.

(a) $\int_{-\infty}^{\infty}\left[e^{-4t^2}\,\delta(t-2)\right]dt = e^{-4t^2}\Big|_{t=2} = e^{-16} = \mathbf{112\times 10^{-9}}$

(b) $\int_{-\infty}^{\infty}\left[5\delta(t)+e^{-t}\,\delta(t)+\cos 2\pi t\,\delta(t)\right]dt = \left(5+e^{-t}+\cos(2\pi t)\right)\Big|_{t=0} = 5+1+1 = \mathbf{7}$

www.konkur.in

Chapter 7, Solution 32.

(a) $\int_1^t u(\lambda)d\lambda = \int_1^t 1d\lambda = \lambda \Big|_1^t = \underline{t-1}$

(b) $\int_0^4 r(t-1)dt = \int_0^1 0dt + \int_1^4 (t-1)dt = \frac{t^2}{2} - t\Big|_1^4 = \underline{4.5}$

(c) $\int_1^5 (t-6)^2 \delta(t-2)dt = (t-6)^2\Big|_{t=2} = \underline{16}$

www.konkur.in

Chapter 7, Solution 33.

$$\mathrm{i(t)} = \frac{1}{\mathrm{L}}\int_0^{\mathrm{t}} \mathrm{v(t)\ dt} + \mathrm{i(0)}$$

$$i(t) = \frac{10^{-3}}{10\times 10^{-3}}\int_0^t 15\delta(t-2)\ dt + 0$$

$$\mathrm{i(t)} = \mathbf{1.5}\,\boldsymbol{u(t-2)}\ \boldsymbol{A}$$

www.konkur.in

Chapter 7, Solution 34.

(a)
$$\frac{d}{dt}\left[u(t-1)\,u(t+1)\right] = \delta(t-1)u(t+1) +$$
$$u(t-1)\delta(t+1) = \delta(t-1)1 + 0\delta(t+1) = \underline{\delta(t-1)}$$

(b)
$$\frac{d}{dt}\left[r(t-6)\,u(t-2)\right] = u(t-6)u(t-2) +$$
$$r(t-6)\delta(t-2) = u(t-6)1 + 0\delta(t-2) = \underline{u(t-6)}$$

(c)
$$\frac{d}{dt}\left[\sin 4t\; u(t-3)\right] = 4\cos 4t\; u(t-3) + \sin 4t\delta(t-3)$$
$$= 4\cos 4t\; u(t-3) + \sin 4x3\delta(t-3)$$
$$= \underline{4\cos 4t\; u(t-3) - 0.5366\delta(t-3)}$$

www.konkur.in

Chapter 7, Solution 35.

(a)

$v = Ae^{-2t}, \qquad v(0) = A = -1$

$$v(t) = \mathbf{-e^{-2t}u(t)\ V}$$

(b)

$i = Ae^{3t/2}, \qquad i(0) = A = 2$

$$i(t) = \mathbf{2e^{-1.5t}u(t)\ A}$$

www.konkur.in

Chapter 7, Solution 36.

(a) $v(t) = A + Be^{-t}, \quad t > 0$

$A = 1, \qquad v(0) = 0 = 1 + B \qquad \text{or} \qquad B = -1$

$v(t) = \mathbf{1 - e^{-t}\ V, \quad t > 0}$

(b) $v(t) = A + Be^{t/2}, \quad t > 0$

$A = -3, \qquad v(0) = -6 = -3 + B \qquad \text{or} \qquad B = -3$

$v(t) = \mathbf{-3\left(1 + e^{t/2}\right) V, \quad t > 0}$

www.konkur.in

Chapter 7, Solution 37.

Let $v = v_h + v_p$, $v_p = 10$.

$$\dot{v}_h + \frac{1}{4}v_h = 0 \quad \longrightarrow \quad v_h = Ae^{-t/4}$$

$$v = 10 + Ae^{-0.25t}$$

$$v(0) = 2 = 10 + A \quad \longrightarrow \quad A = -8$$

$$v = 10 - 8e^{-0.25t}$$

(a) $\boldsymbol{\tau = \underline{4s}}$

(b) $\boldsymbol{v(\infty) = 10\ \text{V}}$

(c) $\boldsymbol{\underline{v = \left(10 - 8e^{-0.25t}\right)u(t)\ V}}$

www.konkur.in

Chapter 7, Solution 38.

Let $i = i_p + i_h$

$$\dot{i}_h + 3i_h = 0 \quad \longrightarrow \quad i_h = Ae^{-3t}u(t)$$

Let $i_p = ku(t), \quad \dot{i}_p = 0, \quad 3ku(t) = 2u(t) \quad \longrightarrow \quad k = \frac{2}{3}$

$$i_p = \frac{2}{3}u(t)$$

$$i = (Ae^{-3t} + \frac{2}{3})u(t)$$

If i(0) =0, then A + 2/3 = 0, i.e. A=-2/3. Thus,

$$\underline{\boldsymbol{i = \frac{2}{3}(1 - e^{-3t})u(t)}}$$

www.konkur.in

Chapter 7, Solution 39.

(a) Before t = 0,

$$v(t) = \frac{1}{4+1}(20) = \mathbf{4\ V}$$

After t = 0,

$$v(t) = v(\infty) + \left[\, v(0) - v(\infty) \right] e^{-t/\tau}$$

$$\tau = RC = (4)(2) = 8, \quad v(0) = 4, \qquad v(\infty) = 20$$

$$v(t) = 20 + (4 - 20)\, e^{-t/8}$$

$$v(t) = 20 - 16\, e^{-t/8}\ \text{V}$$

(b) Before t = 0, $v = v_1 + v_2$, where v_1 is due to the 12-V source and v_2 is due to the 2-A source.

$$v_1 = 12\ \text{V}$$

To get v_2, transform the current source as shown in Fig. (a).

$$v_2 = -8\ \text{V}$$

Thus,

$$v = 12 - 8 = \mathbf{4\ V}$$

After t = 0, the circuit becomes that shown in Fig. (b).

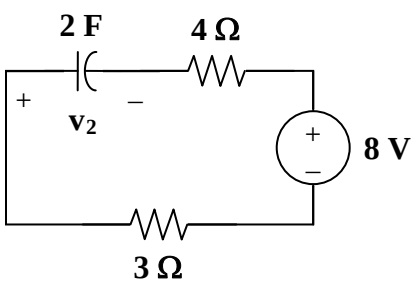

(a)

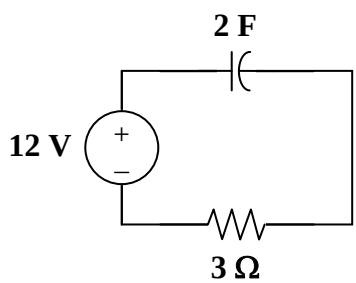

(b)

$$v(t) = v(\infty) + \left[\, v(0) - v(\infty) \right] e^{-t/\tau}$$

$$v(\infty) = 12, \qquad v(0) = 4, \qquad \tau = RC = (2)(3) = 6$$

$$v(t) = 12 + (4 - 12)\, e^{-t/6}$$

$$v(t) = \mathbf{12 - 8\, e^{-t/6}\ V}$$

www.konkur.in

Chapter 7, Solution 40.

(a) Before t = 0, v = **12 V** .

After t = 0, $v(t) = v(\infty) + \left[v(0) - v(\infty) \right] e^{-t/\tau}$

$v(\infty) = 4$, $v(0) = 12$, $\tau = RC = (2)(3) = 6$

$v(t) = 4 + (12 - 4)\, e^{-t/6}$

$v(t) = \mathbf{4 + 8\, e^{-t/6}}$ **V**

(b) Before t = 0, v = **12 V** .

After t = 0, $v(t) = v(\infty) + \left[v(0) - v(\infty) \right] e^{-t/\tau}$

After transforming the current source, the circuit is shown below.

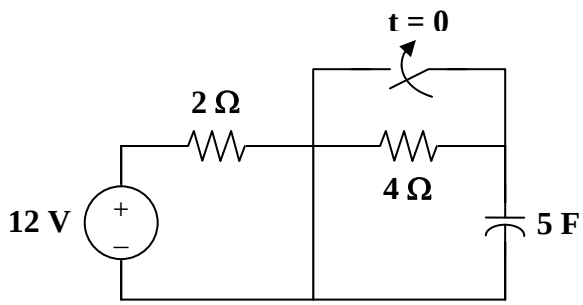

$v(0) = 12$, $v(\infty) = 12$, $\tau = RC = (2)(5) = 10$

v = **12 V**

www.konkur.in

Chapter 7, Solution 41.

Using Fig. 7.108, design a problem to help other students to better understand the step response of an RC circuit.

Although there are many ways to work this problem, this is an example based on the same kind of problem asked in the third edition.

Problem

For the circuit in Fig. 7.108, find $v(t)$ for $t > 0$.

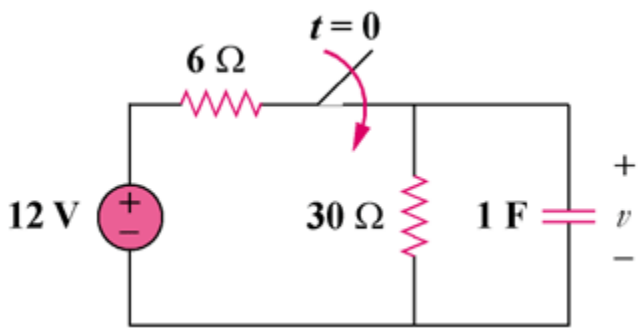

Figure 7.108

Solution

$$v(0) = 0, \qquad v(\infty) = \frac{30}{36}(12) = 10$$

$$R_{eq}C = (6 \,||\, 30)(1) = \frac{(6)(30)}{36} = 5$$

$$v(t) = v(\infty) + \left[v(0) - v(\infty) \right] e^{-t/\tau}$$

$$v(t) = 10 + (0 - 10)\, e^{-t/5}$$

$$v(t) = \underline{10\,(1 - e^{-0.2t})\, u(t) V}$$

www.konkur.in

Chapter 7, Solution 42.

(a) $v_o(t) = v_o(\infty) + \left[v_o(0) - v_o(\infty) \right] e^{-t/\tau}$

$v_o(0) = 0, \qquad v_o(\infty) = \dfrac{4}{4+2}(12) = 8$

$\tau = R_{eq}C_{eq}, \qquad R_{eq} = 2 \,||\, 4 = \dfrac{4}{3}$

$\tau = \dfrac{4}{3}(3) = 4$

$v_o(t) = 8 - 8e^{-t/4}$

$$v_o(t) = \mathbf{8(1 - e^{-0.25t})\ V}$$

(b) For this case, $v_o(\infty) = 0$ so that

$v_o(t) = v_o(0)e^{-t/\tau}$

$v_o(0) = \dfrac{4}{4+2}(12) = 8, \qquad \tau = RC = (4)(3) = 12$

$$v_o(t) = \mathbf{8e^{-t/12}\ V}$$

www.konkur.in

Chapter 7, Solution 43.

Before t = 0, the circuit has reached steady state so that the capacitor acts like an open circuit. The circuit is equivalent to that shown in Fig. (a) after transforming the voltage source.

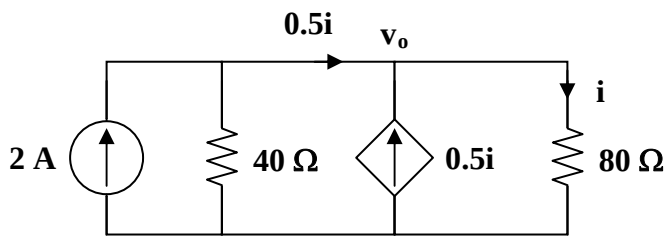

(a)

$$0.5i = 2 - \frac{v_o}{40}, \qquad i = \frac{v_o}{80}$$

Hence, $\frac{1}{2}\frac{v_o}{80} = 2 - \frac{v_o}{40} \longrightarrow v_o = \frac{320}{5} = 64$

$$i = \frac{v_o}{80} = \underline{\mathbf{0.8\ A}}$$

After t = 0, the circuit is as shown in Fig. (b).

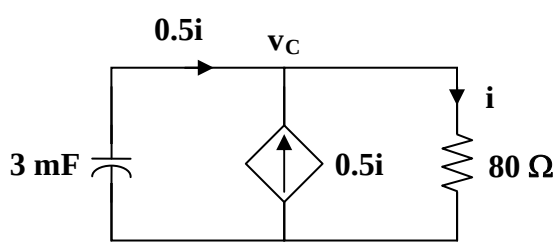

(b)

$$v_C(t) = v_C(0)e^{-t/\tau}, \qquad \tau = R_{th}C$$

To find R_{th}, we replace the capacitor with a 1-V voltage source as shown in Fig. (c).

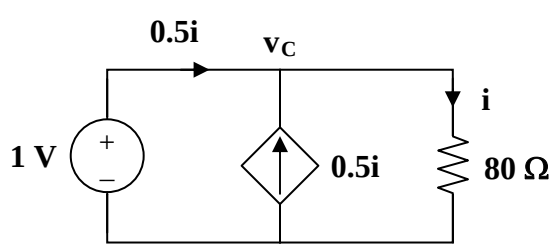

(c)

www.konkur.in

$$i = \frac{v_C}{80} = \frac{1}{80}, \qquad i_o = 0.5i = \frac{0.5}{80}$$

$$R_{th} = \frac{1}{i_o} = \frac{80}{0.5} = 160\,\Omega, \qquad \tau = R_{th}C = 480$$

$$v_C(0) = 64\text{ V}$$

$$v_C(t) = 64\,e^{-t/480}$$

$$0.5i = -i_C = -C\frac{dv_C}{dt} = -3\left(\frac{1}{480}\right)64\,e^{-t/480}$$

$$i(t) = \mathbf{800}\,\boldsymbol{e^{-t/480}u(t)}\ \boldsymbol{mA}$$

www.konkur.in

Chapter 7, Solution 44.

$$R_{eq} = 6 \,||\, 3 = 2\,\Omega, \qquad \tau = RC = 4$$
$$v(t) = v(\infty) + \left[\, v(0) - v(\infty)\right] e^{-t/\tau}$$

Using voltage division,

$$v(0) = \frac{3}{3+6}(60) = 20\,V, \qquad v(\infty) = \frac{3}{3+6}(24) = 8\,V$$

Thus,

$$v(t) = 8 + (20-8)\, e^{-t/4} = 8 + 12\, e^{-t/4}$$
$$i(t) = C\frac{dv}{dt} = (2)(12)\left(\frac{-1}{4}\right)e^{-t/4} = \mathbf{-6\,e^{-0.25t}\ A}$$

www.konkur.in

Chapter 7, Solution 45.

To find R_{Th}, consider the circuit shown below.

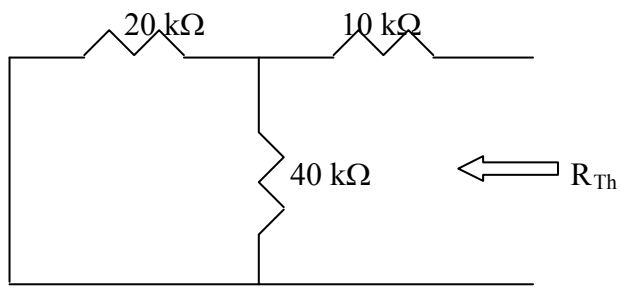

$$R_{Th} = 10 + 20//40 = 10 + \frac{20x40}{60} = \frac{70}{3}k\Omega$$

$$\tau = R_{Th}C = \frac{70}{3}x10^3 x3x10^{-6} = 0.07$$

To find $v_o(\infty)$, consider the circuit below.

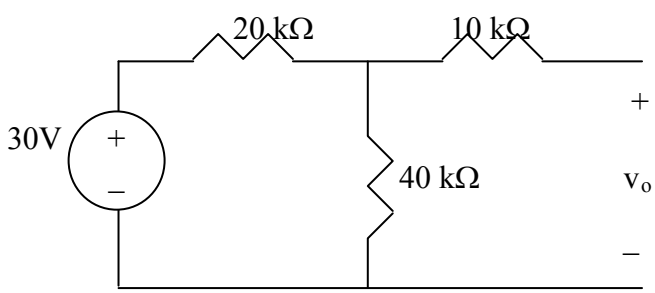

$v_o(\infty) = [40/(40+20)]30 = 20$ V

$v_o(t) = v_o(\infty) + [v_o(0) - v_o(\infty)]e^{-t/0.07} =$ **$[20 - 15e^{-14.286t}]u(t)$ V**.

www.konkur.in

Chapter 7, Solution 46.

$$\tau = R_{Th}C = (2+6)x0.25 = 2s, \qquad v(0) = 0, \qquad v(\infty) = 6i_s = 6x5 = 30$$

$$\boldsymbol{v(t) = v(\infty) + [v(0) - v(\infty)]e^{-t/\tau} = \underline{30(1 - e^{-t/2})}\, u(t)\ V}$$

www.konkur.in

Chapter 7, Solution 47.

For $t < 0$, $u(t) = 0$, $u(t-1) = 0$, $v(0) = 0$

For $0 < t < 1$, $\tau = RC = (2+8)(0.1) = 1$

$$v(0) = 0, \qquad v(\infty) = (8)(3) = 24$$

$$v(t) = v(\infty) + \left[v(0) - v(\infty) \right] e^{-t/\tau}$$

$$v(t) = 24\left(1 - e^{-t}\right)$$

For $t > 1$, $v(1) = 24\left(1 - e^{-1}\right) = 15.17$

$$-6 + v(\infty) - 24 = 0 \longrightarrow v(\infty) = 30$$

$$v(t) = 30 + (15.17 - 30)\, e^{-(t-1)}$$

$$v(t) = 30 - 14.83\, e^{-(t-1)}$$

Thus,

$$v(t) = \begin{cases} \mathbf{24\left(1 - e^{-t}\right) V,} & \mathbf{0 < t < 1} \\ \mathbf{30 - 14.83\, e^{-(t-1)}\ V,} & \mathbf{t > 1} \end{cases}$$

www.konkur.in

Chapter 7, Solution 48.

For t < 0, $u(-t) = 1$,

For t > 0, $u(-t) = 0$, $v(\infty) = 0$

$$R_{th} = 20 + 10 = 30, \quad \tau = R_{th}C = (30)(0.1) = 3$$

$$v(t) = v(\infty) + \left[v(0) - v(\infty) \right] e^{-t/\tau}$$

$$v(t) = \mathbf{10\,e^{-t/3}\ V}$$

$$i(t) = C\frac{dv}{dt} = (0.1)\left(\frac{-1}{3}\right)10\,e^{-t/3}$$

$$i(t) = \mathbf{\frac{-1}{3}e^{-t/3}\ A}$$

www.konkur.in

Chapter 7, Solution 49.

For $0 < t < 1$, $v(0) = 0$, $v(\infty) = (2)(4) = 8$

$$R_{eq} = 4 + 6 = 10, \qquad \tau = R_{eq}C = (10)(0.5) = 5$$

$$v(t) = v(\infty) + \left[v(0) - v(\infty) \right] e^{-t/\tau}$$

$$v(t) = 8\left(1 - e^{-t/5}\right) \text{ V}$$

For $t > 1$, $v(1) = 8\left(1 - e^{-0.2}\right) = 1.45$, $v(\infty) = 0$

$$v(t) = v(\infty) + \left[v(1) - v(\infty) \right] e^{-(t-1)/\tau}$$

$$v(t) = 1.45\, e^{-(t-1)/5} \text{ V}$$

Thus,

$$v(t) = \begin{cases} \mathbf{8\left(1 - e^{-t/5}\right) V, \quad 0 < t < 1} \\ \mathbf{1.45\, e^{-(t-1)/5} \text{ V}, \quad t > 1} \end{cases}$$

www.konkur.in

Chapter 7, Solution 50.

For the capacitor voltage,

$$v(t) = v(\infty) + \left[v(0) - v(\infty) \right] e^{-t/\tau}$$
$$v(0) = 0$$

For t > 0, we transform the current source to a voltage source as shown in Fig. (a).

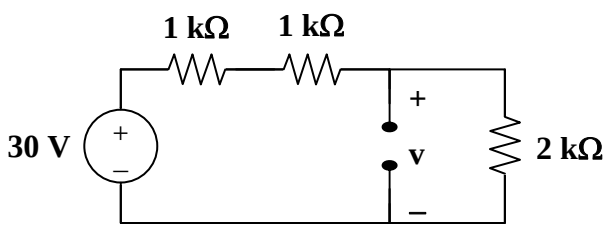

(a)

$$v(\infty) = \frac{2}{2+1+1}(30) = 15 \text{ V}$$
$$R_{th} = (1+1) \parallel 2 = 1 \text{ k}\Omega$$
$$\tau = R_{th}C = 10^3 \times \frac{1}{4} \times 10^{-3} = \frac{1}{4}$$
$$v(t) = 15\left(1 - e^{-4t}\right), \quad t > 0$$

We now obtain i_x from v(t). Consider Fig. (b).

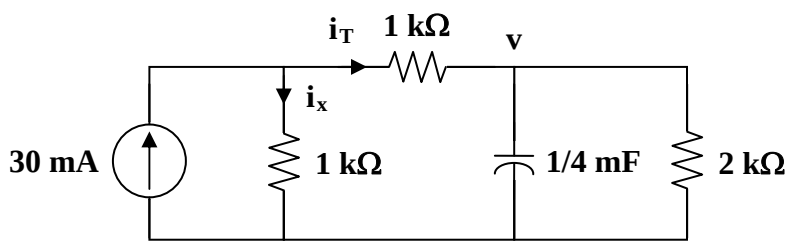

(b)

$$i_x = 30 \text{ mA} - i_T$$

But $$i_T = \frac{v}{R_3} + C\frac{dv}{dt}$$

$$i_T(t) = 7.5\left(1 - e^{-4t}\right) \text{ mA} + \frac{1}{4} \times 10^{-3}(-15)(-4)e^{-4t} \text{ A}$$
$$i_T(t) = 7.5\left(1 + e^{-4t}\right) \text{ mA}$$

Thus,

$$i_x(t) = 30 - 7.5 - 7.5e^{-4t} \text{ mA}$$
$$\mathbf{i_x(t) = 7.5\left(3 - e^{-4t}\right) mA, \quad t > 0}$$

www.konkur.in

Chapter 7, Solution 51.

Consider the circuit below.

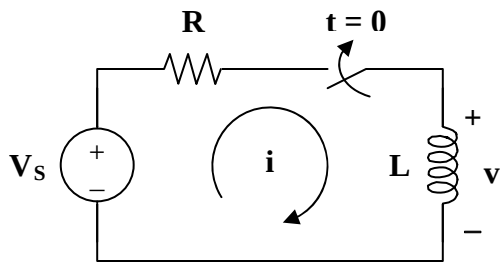

After the switch is closed, applying KVL gives

$$V_S = Ri + L\frac{di}{dt}$$

or

$$L\frac{di}{dt} = -R\left(i - \frac{V_S}{R}\right)$$

$$\frac{di}{i - V_S/R} = \frac{-R}{L}dt$$

Integrating both sides,

$$\ln\left(i - \frac{V_S}{R}\right)\Bigg|_{I_0}^{i(t)} = \frac{-R}{L}t$$

$$\ln\left(\frac{i - V_S/R}{I_0 - V_S/R}\right) = \frac{-t}{\tau}$$

or

$$\frac{i - V_S/R}{I_0 - V_S/R} = e^{-t/\tau}$$

$$\mathbf{i(t) = \frac{V_S}{R} + \left(I_0 - \frac{V_S}{R}\right)e^{-t/\tau}}$$

which is the same as Eq. (7.60).

www.konkur.in

Chapter 7, Solution 52.

Using Fig. 7.118, design a problem to help other students to better understand the step response of an RL circuit.

Although there are many ways to work this problem, this is an example based on the same kind of problem asked in the third edition.

Problem

For the circuit in Fig. 7.118, find $i(t)$ for $t > 0$.

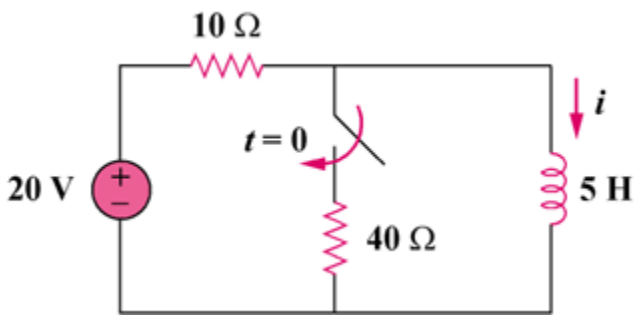

Figure 7.118

Solution

$$i(0) = \frac{20}{10} = 2\text{ A}, \qquad i(\infty) = 2\text{ A}$$

$$i(t) = i(\infty) + \left[i(0) - i(\infty) \right] e^{-t/\tau}$$

$$i(t) = \mathbf{2\ A}$$

www.konkur.in

Chapter 7, Solution 53.

(a) Before t = 0, $i = \frac{25}{3+2} = \mathbf{5\ A}$

After t = 0, $i(t) = i(0)e^{-t/\tau}$

$$\tau = \frac{L}{R} = \frac{4}{2} = 2, \qquad i(0) = 5$$

$$i(t) = \mathbf{5}\boldsymbol{e}^{-t/2}\ \boldsymbol{u(t)A}$$

(b) Before t = 0, the inductor acts as a short circuit so that the 2 Ω and 4 Ω resistors are short-circuited.

$$i(t) = \mathbf{6\ A}$$

After t = 0, we have an RL circuit.

$$i(t) = i(0)e^{-t/\tau}, \qquad \tau = \frac{L}{R} = \frac{3}{2}$$

$$i(t) = \mathbf{6}\boldsymbol{e}^{-2t/3}\ \boldsymbol{u(t)A}$$

Chapter 7, Solution 54.

(a) Before t = 0, i is obtained by current division or

$$i(t) = \frac{4}{4+4}(2) = \mathbf{1\ A}$$

After t = 0,

$$i(t) = i(\infty) + \left[i(0) - i(\infty)\right] e^{-t/\tau}$$

$$\tau = \frac{L}{R_{eq}}, \qquad R_{eq} = 4 + (4 \| 12) = 7\ \Omega$$

$$\tau = \frac{3.5}{7} = \frac{1}{2}$$

$$i(0) = 1, \qquad i(\infty) = \frac{(4 \| 12)}{4 + (4 \| 12)}(2) = \frac{3}{4+3}(2) = \frac{6}{7}$$

$$i(t) = \frac{6}{7} + \left(1 - \frac{6}{7}\right) e^{-2t}$$

$$i(t) = \mathbf{\frac{1}{7}\left(6 - e^{-2t}\right)\ A}$$

(b) Before t = 0, $i(t) = \frac{10}{2+3} = \mathbf{2\ A}$

After t = 0, $R_{eq} = 3 + (6 \| 2) = 4.5$

$$\tau = \frac{L}{R_{eq}} = \frac{2}{4.5} = \frac{4}{9}$$

$$i(0) = 2$$

To find $i(\infty)$, consider the circuit below, at t = when the inductor becomes a short circuit,

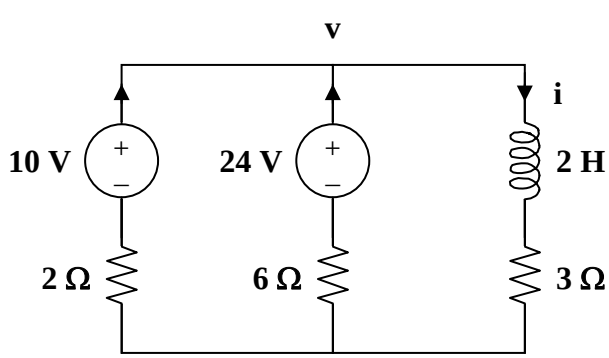

$$\frac{10 - v}{2} + \frac{24 - v}{6} = \frac{v}{3} \longrightarrow v = 9 \quad i(\infty) = \frac{v}{3} = 3\ A \text{ and}$$

$$i(t) = 3 + (2 - 3) e^{-9t/4}$$

$$i(t) = \mathbf{3 - e^{-9t/4}\ A}$$

www.konkur.in

Chapter 7, Solution 55.

For t < 0, consider the circuit shown in Fig. (a).

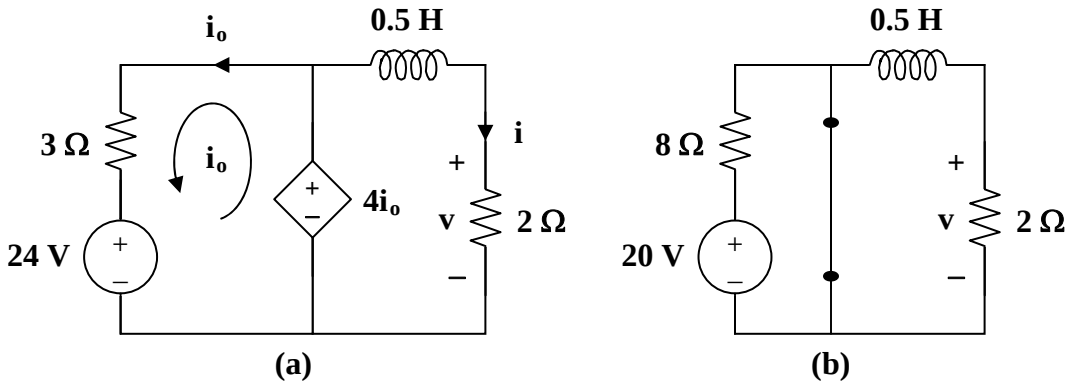

$$3i_o + 24 - 4i_o = 0 \longrightarrow i_o = 24$$

$$v(t) = 4i_o = \mathbf{96\ V} \qquad i = \frac{v}{2} = 48\ \text{A}$$

For t > 0, consider the circuit in Fig. (b).

$$i(t) = i(\infty) + \left[i(0) - i(\infty) \right] e^{-t/\tau}$$

$$i(0) = 48, \qquad i(\infty) = 0$$

$$R_{th} = 2\ \Omega, \qquad \tau = \frac{L}{R_{th}} = \frac{0.5}{2} = \frac{1}{4}$$

$$i(t) = (48)\, e^{-4t}$$

$$v(t) = 2\, i(t) = \mathbf{96}\, \boldsymbol{e^{-4t}}\ \boldsymbol{u(t)V}$$

www.konkur.in

Chapter 7, Solution 56.

$$R_{eq} = 6 + 20 \,||\, 5 = 10\,\Omega, \qquad \tau = \frac{L}{R} = 0.05$$

$$i(t) = i(\infty) + \left[\, i(0) - i(\infty) \right] e^{-t/\tau}$$

i(0) is found by applying nodal analysis to the following circuit.

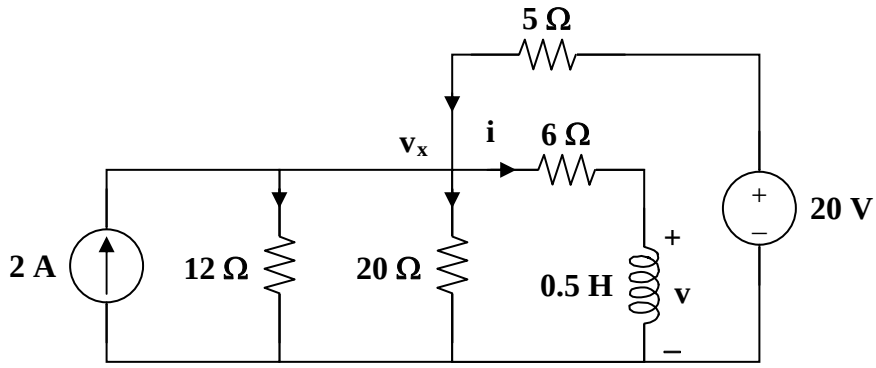

$$2 + \frac{20 - v_x}{5} = \frac{v_x}{12} + \frac{v_x}{20} + \frac{v_x}{6} \longrightarrow v_x = 12$$

$$i(0) = \frac{v_x}{6} = 2 \text{ A}$$

Since $20 \,||\, 5 = 4$,

$$i(\infty) = \frac{4}{4+6}(4) = 1.6$$

$$i(t) = 1.6 + (2 - 1.6)e^{-t/0.05} = 1.6 + 0.4e^{-20t}$$

$$v(t) = L\frac{di}{dt} = \frac{1}{2}(0.4)(-20)e^{-20t}$$

$$v(t) = \mathbf{-4e^{-20t}\ V}$$

www.konkur.in

Chapter 7, Solution 57.

At $t = 0^-$, the circuit has reached steady state so that the inductors act like short circuits.

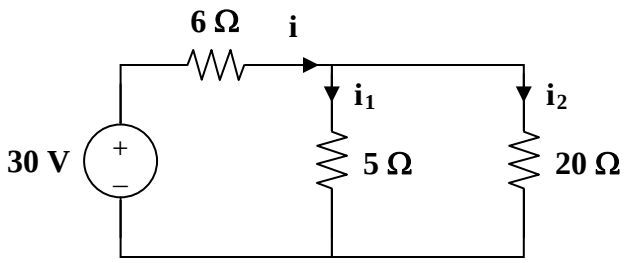

$$i = \frac{30}{6 + (5 \parallel 20)} = \frac{30}{10} = 3, \qquad i_1 = \frac{20}{25}(3) = 2.4, \qquad i_2 = 0.6$$

$$i_1(0) = 2.4 \text{ A}, \qquad i_2(0) = 0.6 \text{ A}$$

For t > 0, the switch is closed so that the energies in L_1 and L_2 flow through the closed switch and become dissipated in the 5 Ω and 20 Ω resistors.

$$i_1(t) = i_1(0)\, e^{-t/\tau_1}, \qquad \tau_1 = \frac{L_1}{R_1} = \frac{2.5}{5} = \frac{1}{2}$$

$$i_1(t) = \mathbf{2.4e^{-2t}u(t)\ A}$$

$$i_2(t) = i_2(0)\, e^{-t/\tau_2}, \qquad \tau_2 = \frac{L_2}{R_2} = \frac{4}{20} = \frac{1}{5}$$

$$i_2(t) = \mathbf{600e^{-5t}u(t)\ mA}$$

www.konkur.in

Chapter 7, Solution 58.

For t < 0, $v_o(t) = 0$

For t > 0, $i(0) = 10$, $i(\infty) = \frac{20}{1+3} = 5$

$$R_{th} = 1 + 3 = 4\,\Omega, \qquad \tau = \frac{L}{R_{th}} = \frac{1/4}{4} = \frac{1}{16}$$

$$i(t) = i(\infty) + \left[i(0) - i(\infty)\right] e^{-t/\tau}$$

$$i(t) = 5\left(1 + e^{-16t}\right) \text{ A}$$

$$v_o(t) = 3i + L\frac{di}{dt} = 15\left(1 + e^{-16t}\right) + \frac{1}{4}(-16)(5)e^{-16t}$$

$$v_o(t) = \mathbf{15 - 5e^{-16t}\ V}$$

www.konkur.in

Chapter 7, Solution 59.

Let i(t) be the current through the inductor.

For t < 0, $v_s = 0$, $i(0) = 0$

For t > 0, $R_{eq} = 4 + (6 \| 3) = 6\ \Omega$ and $\tau = \dfrac{L}{R_{eq}} = \dfrac{1.5}{6} = 0.25\,\text{sec.}$

At t = ∞, the inductor becomes a short and the current delivered by the 18 volts source is I_s = 18/[6+(3||4)] = 18/7.714 = 2.333 amps. The voltage across the 4-ohm resistor is equal to 18–6(2.333) = 18–14 = 4 volts. Therefore the current through the inductor is equal to i(∞) = 4/4 = 1 amp.

$$i(t) = i(\infty) + \left[i(0) - i(\infty) \right] e^{-t/\tau}$$

$$i(t) = 1(1 - e^{-4t})\ \text{amps.}$$

$$v_o(t) = L\frac{di}{dt} = (1.5)(1)(-4)(-e^{-4t})$$

$$v_o(t) = \mathbf{[6e^{-4t}]u(t)\ volts}.$$

www.konkur.in

Chapter 7, Solution 60.

Let I be the inductor current.

For t < 0, $u(t) = 0 \longrightarrow i(0) = 0$

For t > 0, $R_{eq} = 5 \,||\, 20 = 4\,\Omega$, $\tau = \dfrac{L}{R_{eq}} = \dfrac{8}{4} = 2$

$$i(\infty) = 4$$

$$i(t) = i(\infty) + \left[i(0) - i(\infty) \right] e^{-t/\tau}$$

$$i(t) = 4\left(1 - e^{-t/2}\right)$$

$$v(t) = L\frac{di}{dt} = (8)(-4)\left(\frac{-1}{2}\right)e^{-t/2}$$

$$v(t) = \mathbf{16\,e^{-0.5t}\ V}$$

www.konkur.in

Chapter 7, Solution 61.

The current source is transformed as shown below.

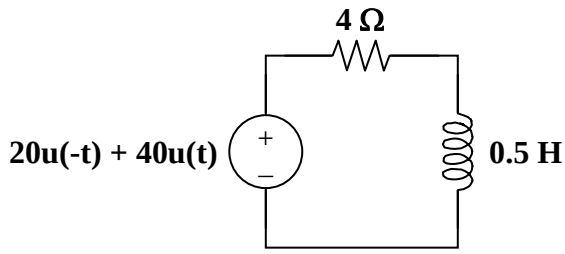

$$\tau = \frac{L}{R} = \frac{1/2}{4} = \frac{1}{8}, \qquad i(0) = 5, \qquad i(\infty) = 10$$

$$i(t) = i(\infty) + \left[i(0) - i(\infty) \right] e^{-t/\tau}$$

$$i(t) = \mathbf{(10 - 5e^{-8t})u(t)\ A}$$

$$v(t) = L\frac{di}{dt} = \left(\frac{1}{2}\right)(-5)(-8)\, e^{-8t}$$

$$v(t) = \mathbf{20e^{-8t}u(t)\ V}$$

www.konkur.in

Chapter 7, Solution 62.

$$\tau = \frac{L}{R_{eq}} = \frac{2}{3 \,||\, 6} = 1$$

For $0 < t < 1$, $u(t-1) = 0$ so that

$$i(0) = 0\,, \qquad i(\infty) = \frac{1}{6}$$

$$i(t) = \frac{1}{6}\left(1 - e^{-t}\right)$$

For $t > 1$, $\quad i(1) = \frac{1}{6}\left(1 - e^{-1}\right) = 0.1054$

$$i(\infty) = \frac{1}{3} + \frac{1}{6} = \frac{1}{2}$$

$$i(t) = 0.5 + (0.1054 - 0.5)\,e^{-(t-1)}$$

$$i(t) = 0.5 - 0.3946\,e^{-(t-1)}$$

Thus,

$$i(t) = \begin{cases} \mathbf{\frac{1}{6}\left(1 - e^{-t}\right)\ A} & \mathbf{0 < t < 1} \\ \mathbf{0.5 - 0.3946\,e^{-(t-1)}\ A} & \mathbf{t > 1} \end{cases}$$

www.konkur.in

Chapter 7, Solution 63.

For t < 0, $u(-t) = 1$, $i(0) = \frac{10}{5} = 2$

For t > 0, $u(-t) = 0$, $i(\infty) = 0$

$$R_{th} = 5 \,||\, 20 = 4\,\Omega, \qquad \tau = \frac{L}{R_{th}} = \frac{0.5}{4} = \frac{1}{8}$$

$$i(t) = i(\infty) + \left[\, i(0) - i(\infty) \right] e^{-t/\tau}$$

$$i(t) = \mathbf{2e^{-8t}u(t)\ A}$$

$$v(t) = L\frac{di}{dt} = \left(\frac{1}{2}\right)(-8)(2)\,e^{-8t}$$

$$v(t) = \mathbf{-8e^{-8t}u(t)\ V}$$

$2e^{-8t}u(t)$ A, $-8e^{-8t}u(t)$ V

www.konkur.in

Chapter 7, Solution 64

Determine the value of $i_L(t)$ and the total energy dissipated by the circuit from t = 0 sec to t = ∞ sec. The value of $v_{in}(t)$ is equal to [40–40u(t)] volts.

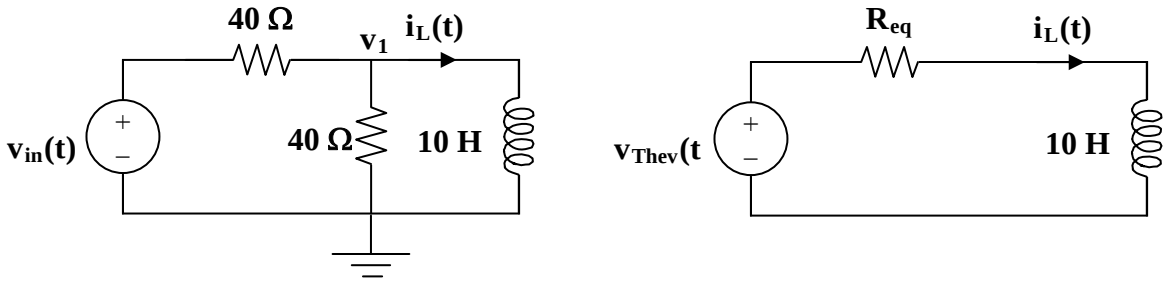

Solution

Step 1. Determine the Thevenin equivalent circuit to the left of the inductor. This means we need to find $v_{oc}(t)$ and $i_{sc}(t)$ which gives us $v_{Thev}(t) = v_{oc}(t)$ and $R_{eq} = v_{oc}(t)/i_{sc}(t)$ (note, this only works for resistor networks in the time domain). This leads to the second circuit shown above.

Now, with this circuit, we can use the generalized solution to a first order differential equation, $i_L(t) = Ae^{-(t-0)/\tau}+B$ where, $t_0 = 0$, $\tau = L/R$, $A+B = i_L(0)$ and $0+B = i_L(\infty)$. Finally, we can use $w = (1/2)Li_L(t)^2$ to calculate the energy dissipated by the circuit ($w = [(1/2)Li_L(\infty)^2–(1/2)Li_L(0)^2]$.

Step 2. We now determine the Thevenin equivalent circuit. First we need to pick a reference node and mark the unknown voltages, as seen above. With the inductor out of the circuit, the node equation is simply $[(v_1–v_{in}(t))/40] + [(v_1–0)/40] + 0$ (since the inductor is out of the circuit, there is an open circuit where it was) = 0. This leads to $[(1/40)+(1/40)]v_1 = (1/40)v_{in}(t)$ or $2v_1 = v_{in}(t)$ or $v_1 = 0.5v_{in}(t) = [20–20u(t)]$ $v_{oc}(t) = v_{Thev}(t)$. Now to short the open circuit which produces $v_1 = 0$ and $i_{sc} = –[(0–v_{in}(t))/40] = v_{in}(t)/40 = 0.025v_{in}(t)$ A.

Step 3. Now, everything comes together, $R_{eq} = v_{oc}(t)/i_{sc}(t) = 0.5v_{in}(t)/[0.025v_{in}(t)] = 0.5/0.025 = 20\ \Omega$. Next we find $\tau = L/R_{eq} = 10/20 = (1/2)$ sec. At $t = 0^-$, $v_{in}(0^-) = [10–0]$ V (note u(t) = 0 until t = 0). Since it has been at this value for a very long time, the inductor can be considered a short and the value of the current is equal to 20/20 or $i_L(0^-) = 1$ amp. Since you cannot change the current instantaneously, $i_L(0) = 1$ amp = A+B. Since $v_{Thev}(t) = 20–20 = 0$ for all t > 0, all the energy in the inductor will be dissipated by the circuit and $i_L(\infty) = 0 = B$ which means that A = 1 and $i_L(t) =$ **$[e^{-2t}]$ u(t) amps**. The total energy dissipated from t = 0 to ∞ sec is equal to $[(1/2)Li_L(0)^2–(1/2)Li_L(\infty)^2] = (0.5)10(1)^2–0 =$ **5 J**.

www.konkur.in

Chapter 7, Solution 65.

Since $v_s = 10\left[u(t) - u(t-1)\right]$, this is the same as saying that a 10 V source is turned on at t = 0 and a -10 V source is turned on later at t = 1. This is shown in the figure below.

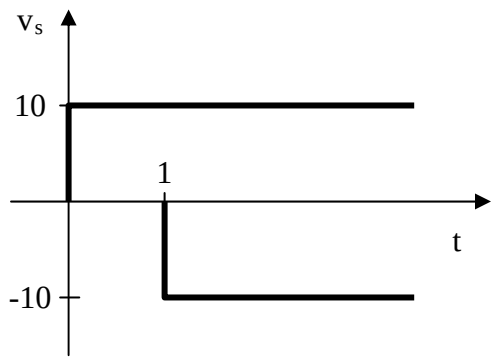

For $0 < t < 1$, $i(0) = 0$, $i(\infty) = \dfrac{10}{5} = 2$

$$R_{th} = 5 \parallel 20 = 4, \qquad \tau = \frac{L}{R_{th}} = \frac{2}{4} = \frac{1}{2}$$

$$i(t) = i(\infty) + \left[i(0) - i(\infty)\right] e^{-t/\tau}$$

$$i(t) = 2\left(1 - e^{-2t}\right) \text{ A}$$

$$i(1) = 2\left(1 - e^{-2}\right) = 1.729$$

For $t > 1$, $i(\infty) = 0$ since $v_s = 0$

$$i(t) = i(1)\, e^{-(t-1)/\tau}$$

$$i(t) = 1.729\, e^{-2(t-1)} \text{ A}$$

Thus,

$$i(t) = \begin{cases} \mathbf{2\left(1 - e^{-2t}\right) A} & \mathbf{0 < t < 1} \\ \mathbf{1.729\, e^{-2(t-1)}\ A} & \mathbf{t > 1} \end{cases}$$

www.konkur.in

Chapter 7, Solution 66.

Using Fig. 7.131, design a problem to help other students to better understand first-order op amp circuits.

Although there are many ways to work this problem, this is an example based on the same kind of problem asked in the third edition.

Problem

For the op-amp circuit of Fig. 7.131, find v_o. Assume that v_s changes abruptly from 0 to 1 V at t=0. Find v_o.

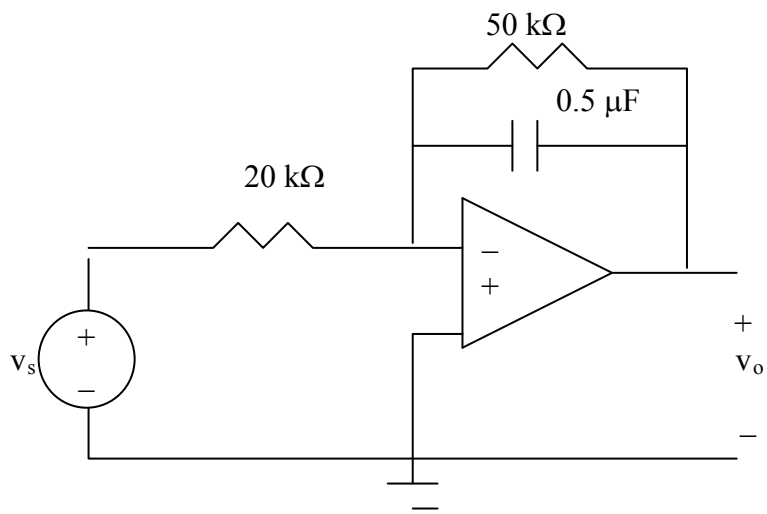

Figure 7.131 For Prob. 7.66.

Solution

For t<0-, v_s =0 so that $v_o(0)=0$
:Let v be the capacitor voltage
For t>0, v_s =1. At steady state, the capacitor acts like an open circuit so that we have an inverting amplifier

$$v_o(\infty) = -(50k/20k)(1V) = -2.5 \text{ V}$$

$$\tau = RC = 50x10^3x0.5x10^{-6} = 25 \text{ ms}$$

$$v_o(t) = v_o(\infty) + (v_o(0) - v_o(\infty))e^{-t/0.025} = \underline{\mathbf{2.5(e^{-40t} - 1)\ V}}.$$

www.konkur.in

Chapter 7, Solution 67.

The op amp is a voltage follower so that $v_o = v$ as shown below.

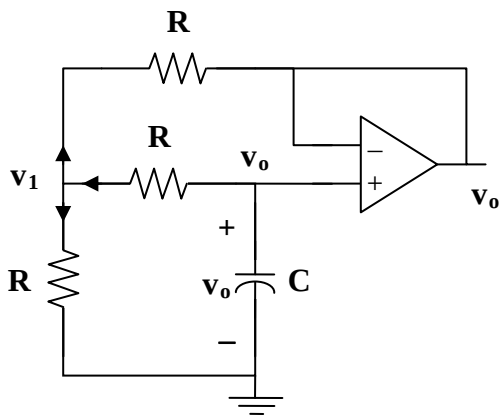

At node 1,

$$\frac{v_o - v_1}{R} = \frac{v_1 - 0}{R} + \frac{v_1 - v_o}{R} \longrightarrow v_1 = \frac{2}{3}v_o$$

At the noninverting terminal,

$$C\frac{dv_o}{dt} + \frac{v_o - v_1}{R} = 0$$

$$-RC\frac{dv_o}{dt} = v_o - v_1 = v_o - \frac{2}{3}v_o = \frac{1}{3}v_o$$

$$\frac{dv_o}{dt} = -\frac{v_o}{3RC}$$

$$v_o(t) = V_T\, e^{-t/3RC}$$

$$V_T = v_o(0) = 5\text{ V}, \qquad \tau = 3RC = (3)(10\times10^3)(1\times10^{-6}) = \frac{3}{100}$$

$$v_o(t) = \mathbf{5e^{-100t/3}u(t)\ V}$$

www.konkur.in

Chapter 7, Solution 68.

This is a very interesting problem which has both an ideal solution as well as a realistic solution. Let us look at the ideal solution first. Just before the switch closes, the value of the voltage across the capacitor is zero which means that the voltage at both terminals input of the op amp are each zero. As soon as the switch closes, the output tries to go to a voltage such that both inputs to the op amp go to 4 volts. The ideal op amp puts out whatever current is necessary to reach this condition. An infinite (impulse) current is necessary if the voltage across the capacitor is to go to 8 volts in zero time (8 volts across the capacitor will result in 4 volts appearing at the negative terminal of the op amp). So v_o will be equal to **8 volts** for all $t > 0$.

What happens in a real circuit? Essentially, the output of the amplifier portion of the op amp goes to whatever its maximum value can be. Then this maximum voltage appears across the output resistance of the op amp and the capacitor that is in series with it. This results in an exponential rise in the capacitor voltage to the steady-state value of 8 volts.

$$vC(t) = V_{op\ amp\ max}(1 - e^{-t/(RoutC)}) \text{ volts, for all values of vC less than 8 V,}$$

$$= \mathbf{8\ V} \text{ when t is large enough so that the 8 V is reached.}$$

www.konkur.in

Chapter 7, Solution 69.

Let v_x be the capacitor voltage.

For t < 0, $v_x(0) = 0$

For t > 0, the 20 kΩ and 100 kΩ resistors are in series and together, they are in parallel with the capacitor since no current enters the op amp terminals.

As $t \to \infty$, the capacitor acts like an open circuit so that

$$v_o(\infty) = \frac{-4}{10}(20+100) = -48$$

$$R_{th} = 20+100 = 120\ k\Omega, \qquad \tau = R_{th}C = (120\times10^3)(25\times10^{-3}) = 3000$$

$$v_o(t) = v_o(\infty) + \left[v_o(0) - v_o(\infty)\right]e^{-t/\tau}$$

$$v_o(t) = -48\left(1 - e^{-t/3000}\right)V = \mathbf{48(e^{-t/3000}-1)u(t)V}$$

www.konkur.in

Chapter 7, Solution 70.

Let v = capacitor voltage.

For t < 0, the switch is open and $v(0) = 0$.

For t > 0, the switch is closed and the circuit becomes as shown below.

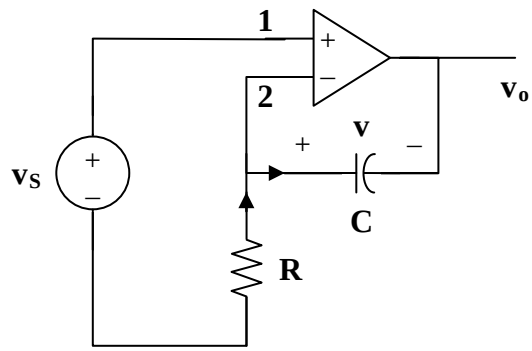

$$v_1 = v_2 = v_s \qquad (1)$$

$$\frac{0 - v_s}{R} = C\frac{dv}{dt} \qquad (2)$$

where $v = v_s - v_o \longrightarrow v_o = v_s - v$ (3)

From (1),

$$\frac{dv}{dt} = \frac{v_s}{RC} = 0$$

$$v = \frac{-1}{RC}\int v_s\, dt + v(0) = \frac{-t\, v_s}{RC}$$

Since v is constant,

$$RC = (20\times10^3)(5\times10^{-6}) = 0.1$$

$$v = \frac{-20t}{0.1}\text{ mV} = -200t\text{ mV}$$

From (3),

$$v_o = v_s - v = 20 + 200t$$

$$v_o = \mathbf{20(1+10t)\ mV}$$

www.konkur.in

Chapter 7, Solution 71.

We temporarily remove the capacitor and find the Thevenin equivalent at its terminals. To find R_{Th}, we consider the circuit below.

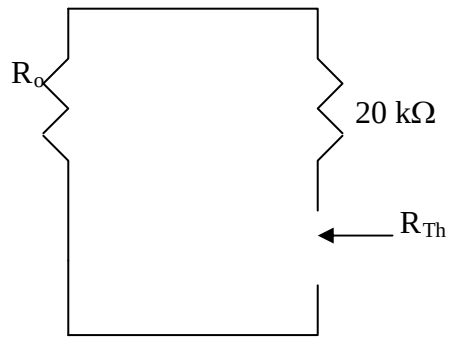

Since we are assuming an ideal op amp, $R_o = 0$ and $R_{Th}=20k\Omega$. The op amp circuit is a noninverting amplifier. Hence,

$$V_{Th} = (1+\frac{10}{10})v_s = 2v_s = 6V$$

The Thevenin equivalent is shown below.

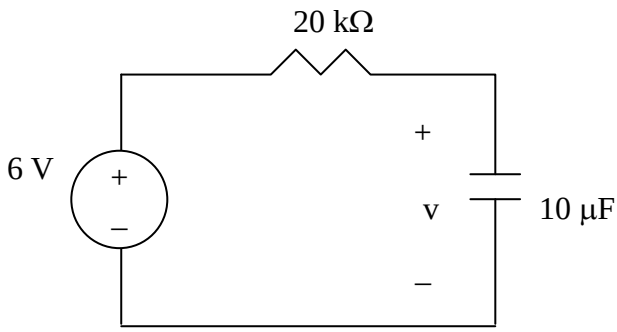

Thus,

$$v(t) = 6(1-e^{-t/\tau}), t > 0$$

where $\tau = R_{TH}C = 20x10^{-3}x10x10^{-6} = 0.2$

$$\underline{v(t) = 6(1-e^{-5t}), t > 0}\ \underline{\mathbf{V}}$$

www.konkur.in

Chapter 7, Solution 72.

The op amp acts as an emitter follower so that the Thevenin equivalent circuit is shown below.

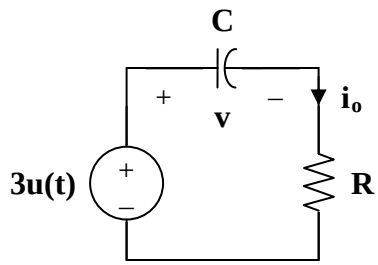

Hence,

$$v(t) = v(\infty) + \left[v(0) - v(\infty) \right] e^{-t/\tau}$$

$$v(0) = -2\ \text{V}, \quad v(\infty) = 3\ \text{V}, \quad \tau = RC = (10 \times 10^{3})(10 \times 10^{-6}) = 0.1$$

$$v(t) = 3 + (-2 - 3)\, e^{-10t} = 3 - 5\, e^{-10t}$$

$$i_o = C\frac{dv}{dt} = (10 \times 10^{-6})(-5)(-10)\, e^{-10t}$$

$$i_o = \mathbf{0.5\, e^{-10t}\ mA, \quad t > 0}$$

www.konkur.in

Chapter 7, Solution 73.

Consider the circuit below.

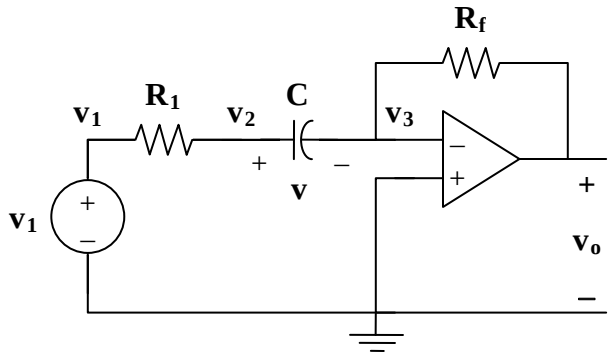

At node 2,

$$\frac{v_1 - v_2}{R_1} = C\frac{dv}{dt} \qquad (1)$$

At node 3,

$$C\frac{dv}{dt} = \frac{v_3 - v_o}{R_f} \qquad (2)$$

But $v_3 = 0$ and $v = v_2 - v_3 = v_2$. Hence, (1) becomes

$$\frac{v_1 - v}{R_1} = C\frac{dv}{dt}$$

$$v_1 - v = R_1 C\frac{dv}{dt}$$

or $$\frac{dv}{dt} + \frac{v}{R_1 C} = \frac{v_1}{R_1 C}$$

which is similar to Eq. (7.42). Hence,

$$v(t) = \begin{cases} v_T & t < 0 \\ v_1 + (v_T - v_1)e^{-t/\tau} & t > 0 \end{cases}$$

where $v_T = v(0) = 1$ and $v_1 = 4$

$$\tau = R_1 C = (10\times10^3)(20\times10^{-6}) = 0.2$$

$$v(t) = \begin{cases} 1 & t < 0 \\ 4 - 3e^{-5t} & t > 0 \end{cases}$$

From (2),

$$v_o = -R_f C\frac{dv}{dt} = (20\times10^3)(20\times10^{-6})(15e^{-5t})$$

$$v_o = -6e^{-5t}, \quad t > 0$$

www.konkur.in

$v_o = \mathbf{-6e^{-5t}\,u(t)\ V}$

www.konkur.in

Chapter 7, Solution 74.

Let v = capacitor voltage. For t < 0, v(0) = 0

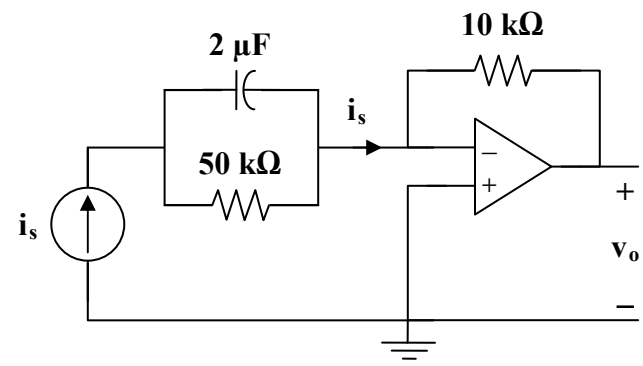

For t > 0, $i_s = 10\ \mu A$.

Since the current through the feedback resistor is i_s, then

$$v_o = -i_s x10^4 \text{ volts} = -10^{-5}x10^4 = \mathbf{-100\ mV}.$$

It is interesting to look at the capacitor voltage.

$$i_s = C\frac{dv}{dt} + \frac{v}{R}$$
$$v(t) = v(\infty) + \left[\, v(0) - v(\infty)\right] e^{-t/\tau}$$

It is evident that

$$\tau = RC = (2\times10^{-6})(50\times10^{3}) = 0.1$$

At steady state, the capacitor acts like an open circuit so that i_s passes through R. Hence,

$$v(\infty) = i_s R = (10\times10^{-6})(50\times10^{3}) = 0.5\text{ V}$$

Then the voltage across the capacitor is,

$$v(t) = \mathbf{500(1-e^{-10t})\ mV}.$$

www.konkur.in

Chapter 7, Solution 75.

Let v_1 = voltage at the noninverting terminal.
Let v_2 = voltage at the inverting terminal.

For t > 0, $v_1 = v_2 = v_s = 4$

$$\frac{0 - v_s}{R_1} = i_o, \quad R_1 = 20\ k\Omega$$

$$v_o = -i_o R \qquad (1)$$

Also, $i_o = \frac{v}{R_2} + C\frac{dv}{dt}, \quad R_2 = 10\ k\Omega, \quad C = 2\ \mu F$

i.e. $$\frac{-v_s}{R_1} = \frac{v}{R_2} + C\frac{dv}{dt} \qquad (2)$$

This is a step response.

$$v(t) = v(\infty) + \left[v(0) - v(\infty)\right] e^{-t/\tau}, \qquad v(0) = 1$$

where $\tau = R_2 C = (10 \times 10^3)(2 \times 10^{-6}) = \frac{1}{50}$

At steady state, the capacitor acts like an open circuit so that i_o passes through R_2. Hence, as $t \to \infty$

$$\frac{-v_s}{R_1} = i_o = \frac{v(\infty)}{R_2}$$

i.e. $$v(\infty) = \frac{-R_2}{R_1} v_s = \frac{-10}{20}(4) = -2$$

$$v(t) = -2 + (1+2)e^{-50t}$$
$$v(t) = -2 + 3e^{-50t}$$

But $v = v_s - v_o$

or $v_o = v_s - v = 4 + 2 - 3e^{-50t}$

$$v_o = \mathbf{6 - 3e^{-50t}\ u(t)V}$$

$$i_o = \frac{-v_s}{R_1} = \frac{-4}{20k} = -0.2\ mA$$

or $$i_o = \frac{v}{R_2} + C\frac{dv}{dt} = \mathbf{-0.2\ mA}$$

www.konkur.in

Chapter 7, Solution 76.

The schematic is shown below. For the pulse, we use IPWL and enter the corresponding values as attributes as shown. By selecting Analysis/Setup/Transient, we let Print Step = 25 ms and Final Step = 2 s since the width of the input pulse is 1 s. After saving and simulating the circuit, we select Trace/Add and display –V(C1:2). The plot of V(t) is shown below.

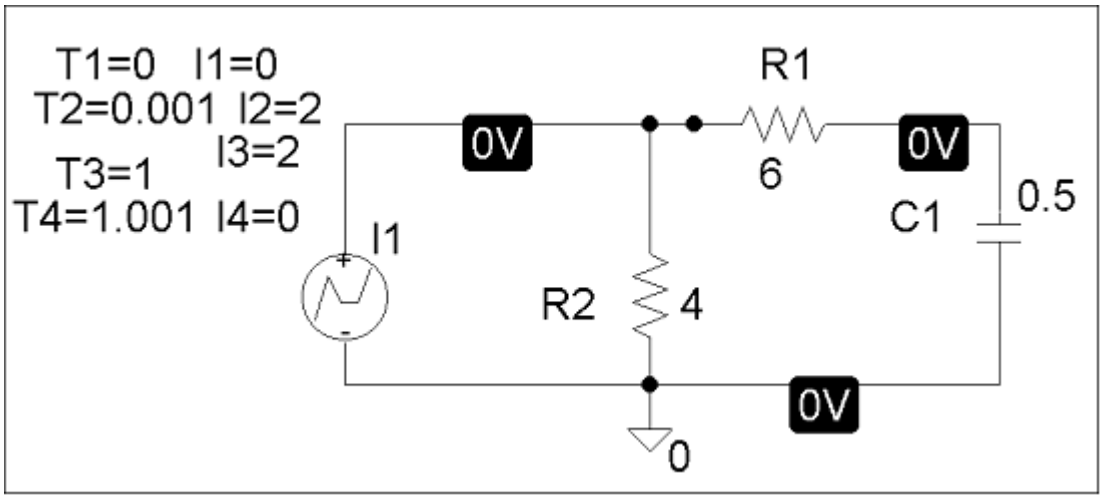

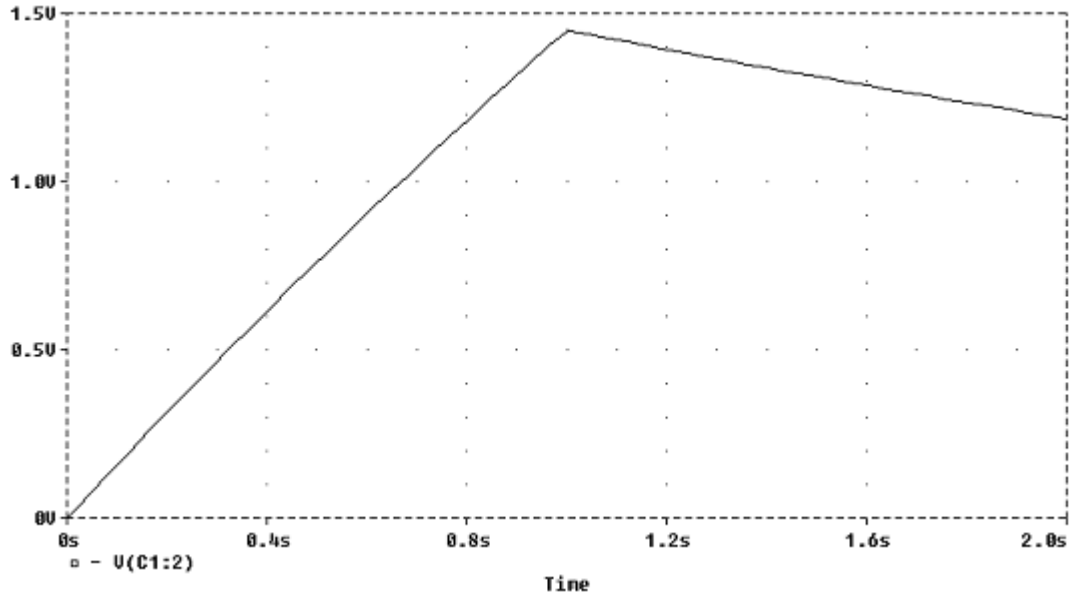

Chapter 7, Solution 77.

The schematic is shown below. We click Marker and insert Mark Voltage Differential at the terminals of the capacitor to display V after simulation. The plot of V is shown below. Note from the plot that V(0) = 12 V and V(∞) = -24 V which are correct.

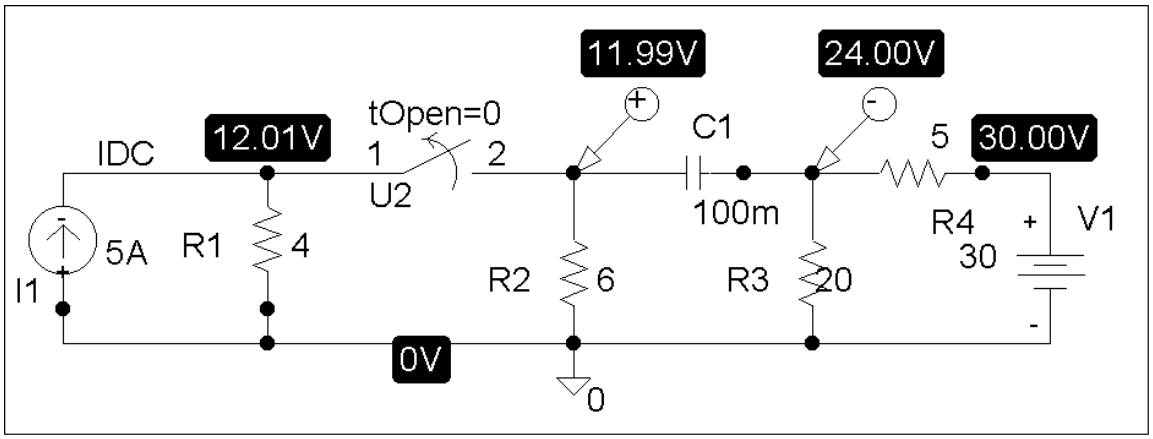

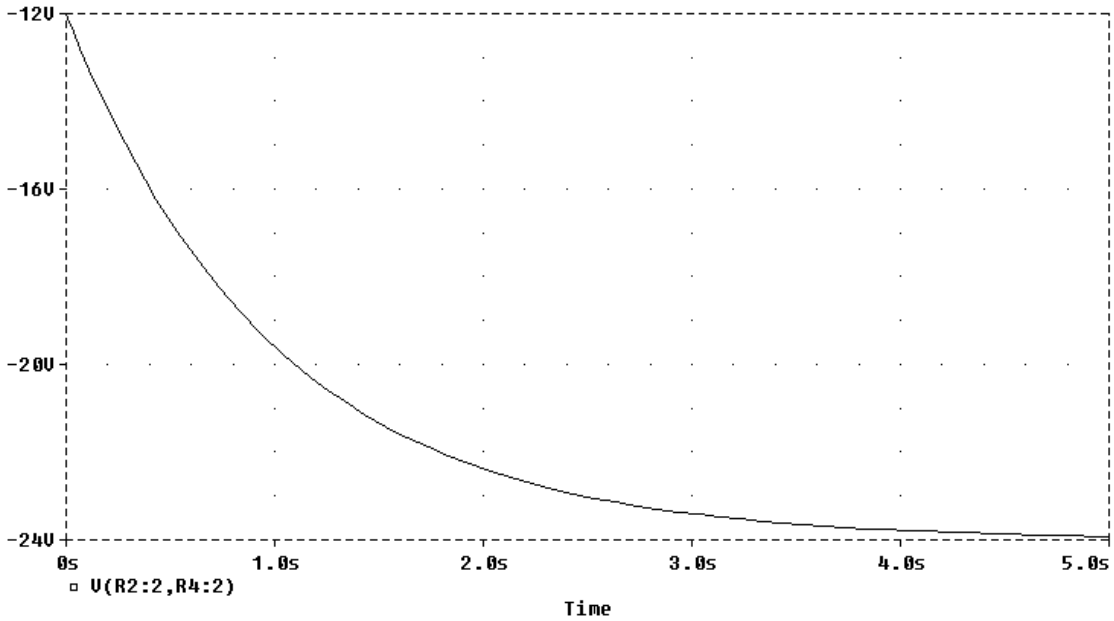

www.konkur.in

Chapter 7, Solution 78.

(a) When the switch is in position (a), the schematic is shown below. We insert IPROBE to display i. After simulation, we obtain,

$$i(0) = 7.714 \text{ A}$$

from the display of IPROBE.

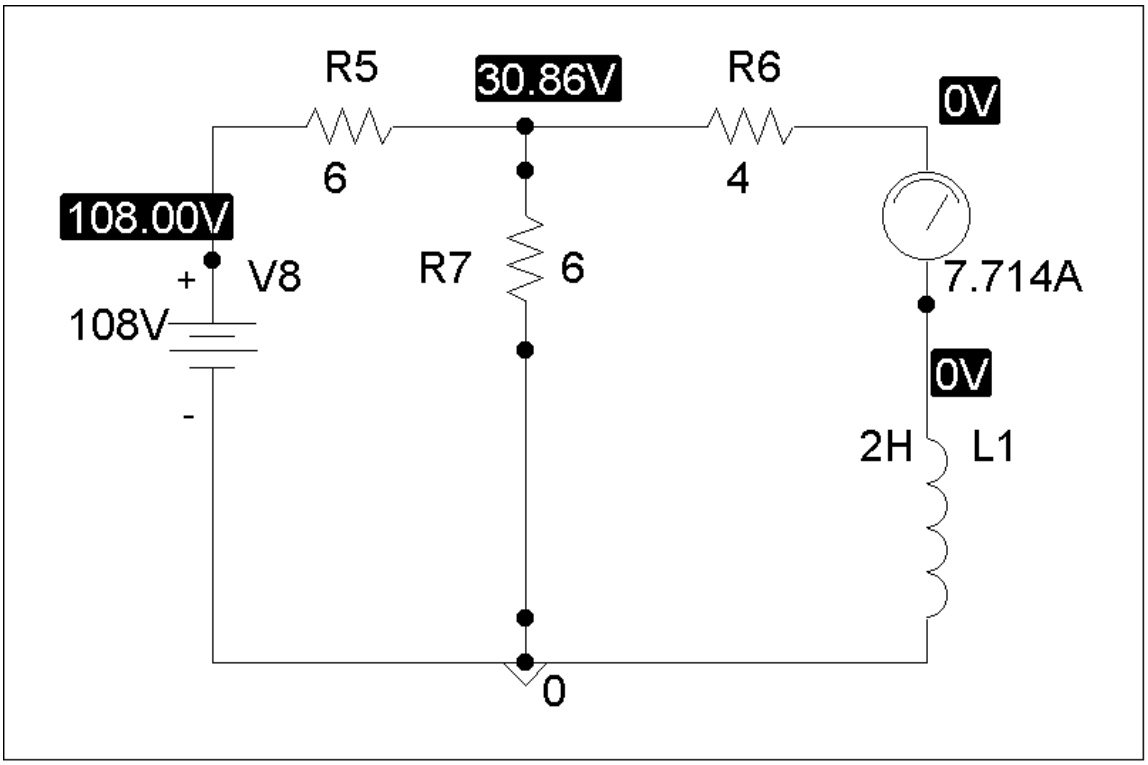

(b) When the switch is in position (b), the schematic is as shown below. For inductor I1, we let IC = 7.714. By clicking Analysis/Setup/Transient, we let Print Step = 25 ms and Final Step = 2 s. After Simulation, we click Trace/Add in the probe menu and display I(L1) as shown below. Note that $i(\infty) = 12$A, which is correct.

www.konkur.in

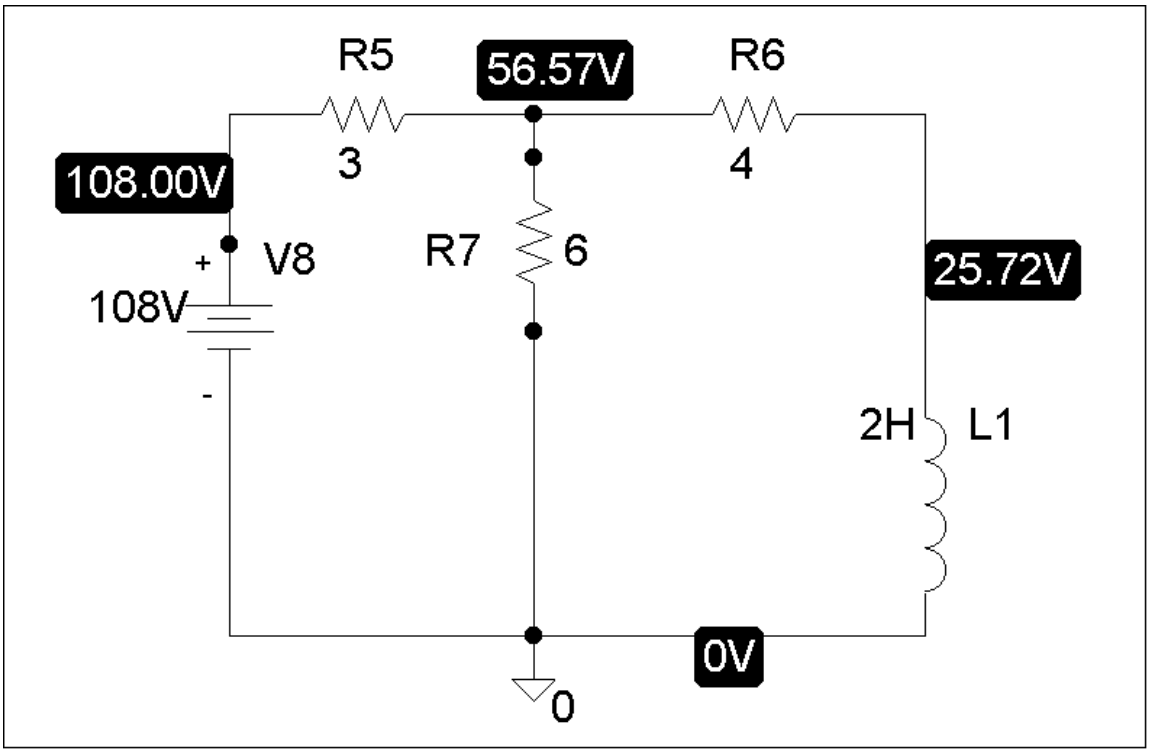

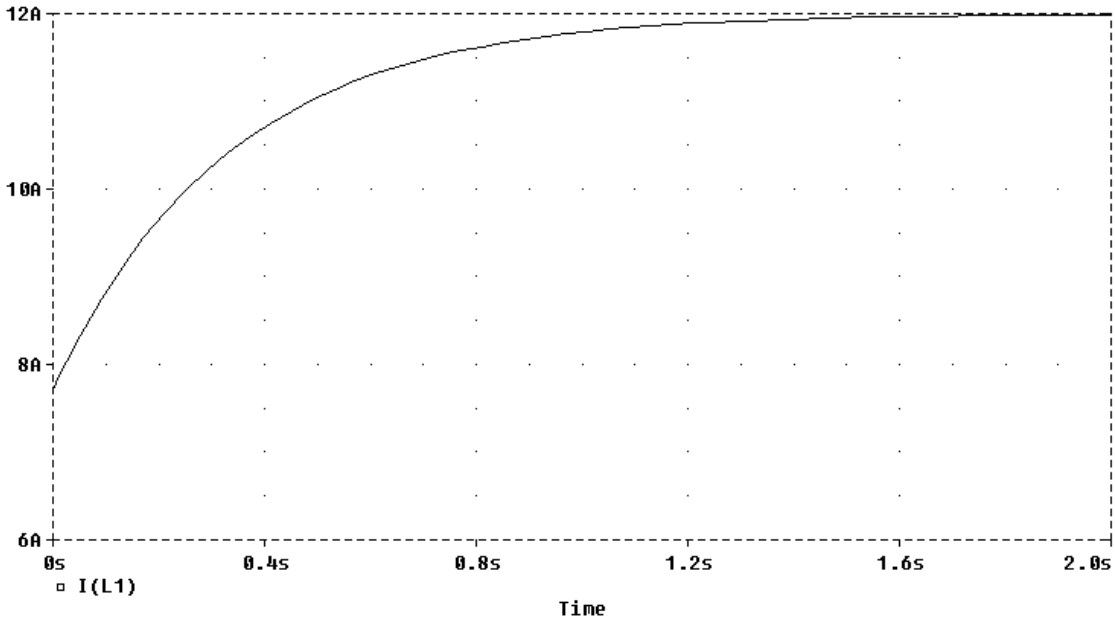

www.konkur.in

Chapter 7, Solution 79.

When the switch is in position 1, $i_o(0) = 12/3 = 4A$. When the switch is in position 2,

$$i_o(\infty) = -\frac{4}{5+3} = -0.5\text{ A}, \qquad R_{Th} = (3+5)//4 = 8/3, \qquad \tau = \frac{L}{R_{Th}} = 3/80$$

$$i_o(t) = i_o(\infty) + [i_o(0) - i_o(\infty)]e^{-t/\tau} = \underline{-0.5 + 4.5e^{-80t/3}}\ u(t)A$$

www.konkur.in

Chapter 7, Solution 80.

(a) When the switch is in position A, the 5-ohm and 6-ohm resistors are short-circuited so that

$$\underline{\boldsymbol{i_1(0) = \quad i_2(0) = v_o(0) = 0}}$$

but the current through the 4-H inductor is $i_L(0)$ =30/10 = 3A.

(b) When the switch is in position B,

$$R_{Th} = 3//6 = 2\Omega, \qquad \tau = \frac{L}{R_{Th}} = 4/2 = 2\,\text{sec}$$

$$\boldsymbol{i_L(t) = i_L(\infty) + [i_L(0) - i_L(\infty)]e^{-t/\tau} = 0 + 3e^{-t/2} = \underline{3e^{-t/2}\ \text{A}}}$$

(c) $i_1(\infty) = \dfrac{30}{10+5} = \underline{2\text{ A}}, \qquad i_2(\infty) = -\dfrac{3}{9} i_L(\infty) = \underline{0\text{ A}}$

$$\boldsymbol{v_o(t) = L\frac{di_L}{dt}} \quad \longrightarrow \quad \underline{\boldsymbol{v_o(\infty) = 0\text{ V}}}$$

Chapter 7, Solution 81.

The schematic is shown below. We use VPWL for the pulse and specify the attributes as shown. In the Analysis/Setup/Transient menu, we select Print Step = 25 ms and final Step = 3 S. By inserting a current marker at one terminal of LI, we automatically obtain the plot of i after simulation as shown below.

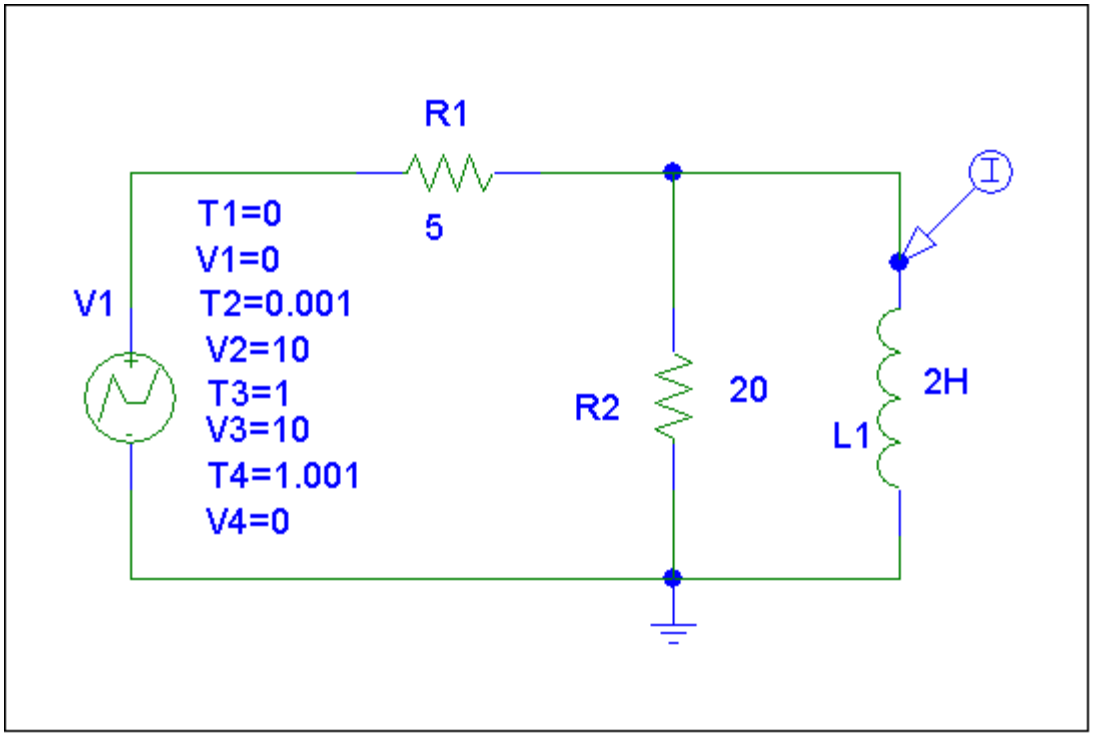

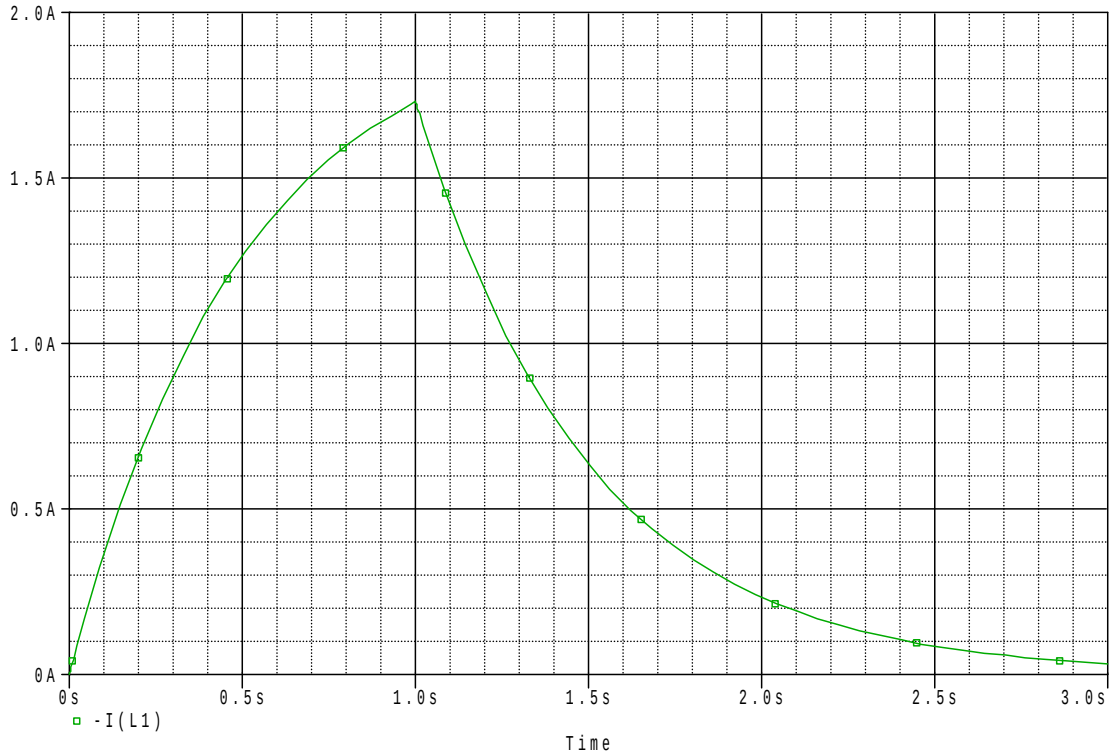

www.konkur.in

Chapter 7, Solution 82.

$$\tau = RC \longrightarrow R = \frac{\tau}{C} = \frac{3\times10^{-3}}{100\times10^{-6}} = \mathbf{30\ \Omega}$$

www.konkur.in

Chapter 7, Solution 83.

$v(\infty) = 120, \quad v(0) = 0, \quad \tau = RC = 34x10^6 x15x10^{-6} = 510s$

$v(t) = v(\infty) + [v(0) - v(\infty)]e^{-t/\tau} \quad \longrightarrow \quad 85.6 = 120(1 - e^{-t/510})$

Solving for t gives

$$t = 510 \ln 3.488 = 637.16s$$

speed = 4000m/637.16s = **6.278m/s**

www.konkur.in

Chapter 7, Solution 84.

Let I_o be the final value of the current. Then

$$i(t) = I_o(1 - e^{-t/\tau}), \qquad \tau = R/L = 0.16/8 = 1/50$$

$$\mathbf{0.6}\boldsymbol{I_o} = \boldsymbol{I_o}(\mathbf{1} - \boldsymbol{e}^{-\mathbf{50}\boldsymbol{t}}) \quad \longrightarrow \quad \boldsymbol{t} = \frac{\mathbf{1}}{\mathbf{50}}\ln\frac{\mathbf{1}}{\mathbf{0.4}} = \underline{\mathbf{18.33\,ms}}.$$

www.konkur.in

Chapter 7, Solution 85.

(a) The light is on from 75 volts until 30 volts. During that time we essentially have a 120-ohm resistor in parallel with a 6-μF capacitor.

$v(0) = 75$, $v(\infty) = 0$, $\tau = 120\text{x}6\text{x}10^{-6} = 0.72$ ms

$v(t_1) = 75\,e^{-t_1/\tau} = 30$ which leads to $t_1 = -0.72\ln(0.4)$ ms = **659.7 μs** of lamp on time.

(b) $\tau = RC = (4\times10^{6})(6\times10^{-6}) = 24$ s

Since $v(t) = v(\infty) + \left[v(0) - v(\infty)\right] e^{-t/\tau}$

$$v(t_1) - v(\infty) = \left[v(0) - v(\infty)\right] e^{-t_1/\tau} \qquad (1)$$

$$v(t_2) - v(\infty) = \left[v(0) - v(\infty)\right] e^{-t_2/\tau} \qquad (2)$$

Dividing (1) by (2),

$$\frac{v(t_1) - v(\infty)}{v(t_2) - v(\infty)} = e^{(t_2 - t_1)/\tau}$$

$$t_0 = t_2 - t_1 = \tau \ln\left(\frac{v(t_1) - v(\infty)}{v(t_2) - v(\infty)}\right)$$

$$t_0 = 24\ln\left(\frac{75-120}{30-120}\right) = 24\ln(2) = \mathbf{16.636\ s}$$

www.konkur.in

Chapter 7, Solution 86.

$$v(t) = v(\infty) + \left[v(0) - v(\infty) \right] e^{-t/\tau}$$

$$v(\infty) = 12, \qquad v(0) = 0$$

$$v(t) = 12\left(1 - e^{-t/\tau}\right)$$

$$v(t_0) = 8 = 12\left(1 - e^{-t_0/\tau}\right)$$

$$\frac{8}{12} = 1 - e^{-t_0/\tau} \quad \longrightarrow \quad e^{-t_0/\tau} = \frac{1}{3}$$

$$t_0 = \tau \ln(3)$$

For $R = 100\ \text{k}\Omega$,

$$\tau = RC = (100 \times 10^3)(2 \times 10^{-6}) = 0.2\ \text{s}$$

$$t_0 = 0.2 \ln(3) = 0.2197\ \text{s}$$

For $R = 1\ \text{M}\Omega$,

$$\tau = RC = (1 \times 10^6)(2 \times 10^{-6}) = 2\ \text{s}$$

$$t_0 = 2 \ln(3) = 2.197\ \text{s}$$

Thus,

$$\mathbf{0.2197\ s < t_0 < 2.197\ s}$$

www.konkur.in

Chapter 7, Solution 87.

Let i be the inductor current.

For t < 0, $i(0^-) = \frac{120}{100} = 1.2 \text{ A}$

For t > 0, we have an RL circuit

$$\tau = \frac{L}{R} = \frac{50}{100+400} = 0.1, \qquad i(\infty) = 0$$

$$i(t) = i(\infty) + \left[i(0) - i(\infty) \right] e^{-t/\tau}$$

$$i(t) = 1.2\, e^{-10t}$$

At t = 100 ms = 0.1 s,

$$i(0.1) = 1.2\, e^{-1} = \mathbf{441mA}$$

which is the same as the current through the resistor.

www.konkur.in

Chapter 7, Solution 88.

(a) $\tau = RC = (300 \times 10^3)(200 \times 10^{-12}) = 60\ \mu s$

As a differentiator,

$$T > 10\tau = 600\ \mu s = 0.6\ ms$$

i.e. T_{min} = **0.6 ms**

(b) $\tau = RC = 60\ \mu s$

As an integrator,

$$T < 0.1\tau = 6\ \mu s$$

i.e. T_{max} = **6 μs**

www.konkur.in

Chapter 7, Solution 89.

Since $\tau < 0.1T = 1\,\mu s$

$$\frac{L}{R} < 1\,\mu s$$

$$L < R \times 10^{-6} = (200 \times 10^{3})(1 \times 10^{-6})$$

L < 200 mH

www.konkur.in

Chapter 7, Solution 90.

We determine the Thevenin equivalent circuit for the capacitor C_s.

$$v_{th} = \frac{R_s}{R_s + R_p} v_i, \qquad R_{th} = R_s \parallel R_p$$

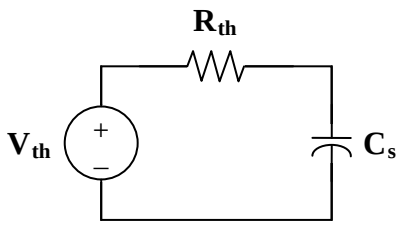

The Thevenin equivalent is an RC circuit. Since

$$v_{th} = \frac{1}{10} v_i \longrightarrow \frac{1}{10} = \frac{R_s}{R_s + R_p}$$

$$R_s = \frac{1}{9} R_p = \frac{6}{9} = \mathbf{\frac{2}{3}\ M\Omega}$$

Also,

$$\tau = R_{th} C_s = 15\ \mu s$$

where $R_{th} = R_p \parallel R_s = \dfrac{6(2/3)}{6 + 2/3} = 0.6\ M\Omega$

$$C_s = \frac{\tau}{R_{th}} = \frac{15 \times 10^{-6}}{0.6 \times 10^{6}} = \mathbf{25\ pF}$$

www.konkur.in

Chapter 7, Solution 91.

$$i_o(0) = \frac{12}{50} = 240 \text{ mA}, \qquad i(\infty) = 0$$

$$i(t) = i(\infty) + \left[i(0) - i(\infty) \right] e^{-t/\tau}$$

$$i(t) = 240\, e^{-t/\tau}$$

$$\tau = \frac{L}{R} = \frac{2}{R}$$

$$i(t_0) = 10 = 240\, e^{-t_0/\tau}$$

$$e^{t_0/\tau} = 24 \quad \longrightarrow \quad t_0 = \tau \ln(24)$$

$$\tau = \frac{t_0}{\ln(24)} = \frac{5}{\ln(24)} = 1.573 = \frac{2}{R}$$

$$R = \frac{2}{1.573} = \mathbf{1.271\ \Omega}$$

www.konkur.in

Chapter 7, Solution 92.

$$i = C\frac{dv}{dt} = 4\times10^{-9}\cdot\begin{cases}\dfrac{10}{2\times10^{-3}} & 0 < t < t_R \\ \dfrac{-10}{5\times10^{-6}} & t_R < t < t_D\end{cases}$$

$$i(t) = \begin{cases}20\ \mu A & 0 < t < 2\ ms \\ -8\ mA & 2\ ms < t < 2\ ms + 5\ \mu s\end{cases}$$

which is sketched below.

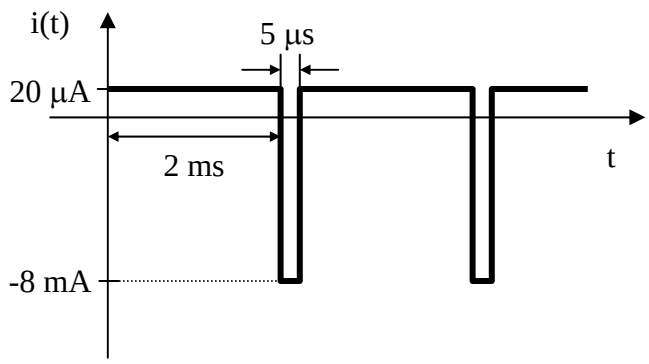

(not to scale)

www.konkur.in

Chapter 8, Solution 1.

(a) At $t = 0-$, the circuit has reached steady state so that the equivalent circuit is shown in Figure (a).

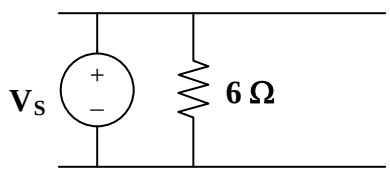

(a)

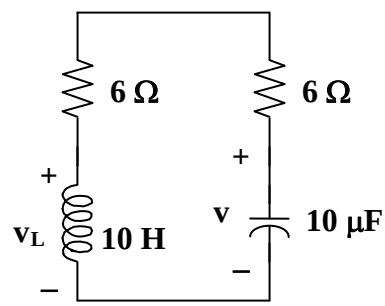

(b)

$$i(0-) = 12/6 = 2A, \quad v(0-) = 12V$$

$$\text{At } t = 0+, \quad i(0+) = i(0-) = \mathbf{2A}, \quad v(0+) = v(0-) = \mathbf{12V}$$

(b) For $t > 0$, we have the equivalent circuit shown in Figure (b).

$$v_L = L\,di/dt \quad \text{or} \quad di/dt = v_L/L$$

Applying KVL at $t = 0+$, we obtain,

$$v_L(0+) - v(0+) + 10i(0+) = 0$$

$$v_L(0+) - 12 + 20 = 0, \quad \text{or} \quad v_L(0+) = -8$$

Hence, $di(0+)/dt = -8/2 = \mathbf{-4\ A/s}$

Similarly, $i_C = C\,dv/dt, \quad \text{or} \quad dv/dt = i_C/C$

$$i_C(0+) = -i(0+) = -2$$

$$dv(0+)/dt = -2/0.4 = \mathbf{-5\ V/s}$$

(c) As t approaches infinity, the circuit reaches steady state.

$$i(\infty) = \mathbf{0\ A}, \quad v(\infty) = \mathbf{0\ V}$$

www.konkur.in

Chapter 8, Solution 2.

Using Fig. 8.63, design a problem to help other students better understand finding initial and final values.

Although there are many ways to work this problem, this is an example based on the same kind of problem asked in the third edition.

Problem

In the circuit of Fig. 8.63, determine:

(a) $i_R(0^+)$, $i_L(0^+)$, and $i_C(0^+)$,

(b) $di_R(0^+)/dt$, $di_L(0^+)/dt$, and $di_C(0^+)/dt$,

(c) $i_R(\infty)$, $i_L(\infty)$, and $i_C(\infty)$.

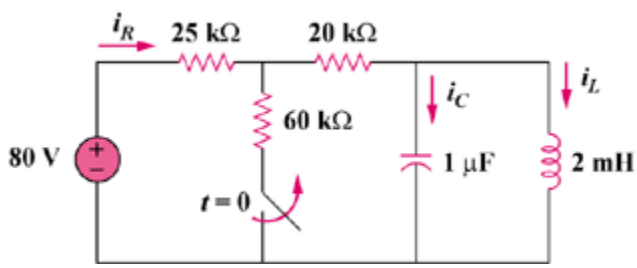

Figure 8.63

Solution

(a) At t = 0-, the equivalent circuit is shown in Figure (a).

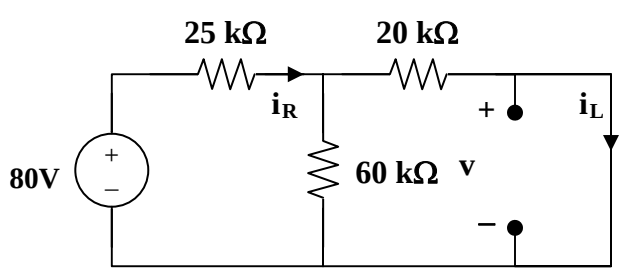

(a)

www.konkur.in

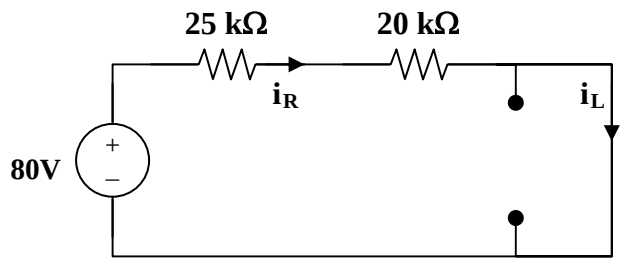

(b)

$$60||20 = 15 \text{ kohms}, \; i_R(0-) = 80/(25 + 15) = 2\text{mA}.$$

By the current division principle,

$$i_L(0-) = 60(2\text{mA})/(60 + 20) = 1.5 \text{ mA}$$

$$v_C(0-) = 0$$

At $t = 0+$,

$$v_C(0+) = v_C(0-) = 0$$

$$i_L(0+) = i_L(0-) = \mathbf{1.5\ mA}$$

$$80 = i_R(0+)(25 + 20) + v_C(0-)$$

$$i_R(0+) = 80/45k = \mathbf{1.778\ mA}$$

But, $$i_R = i_C + i_L$$

$$1.778 = i_C(0+) + 1.5 \text{ or } i_C(0+) = \mathbf{0.278\ mA}$$

(b) $$v_L(0+) = v_C(0+) = 0$$

But, $v_L = L di_L/dt$ and $di_L(0+)/dt = v_L(0+)/L = 0$

$$di_L(0+)/dt = \mathbf{0}$$

Again, $80 = 45i_R + v_C$

$$0 = 45di_R/dt + dv_C/dt$$

But, $dv_C(0+)/dt = i_C(0+)/C = 0.278 \text{ mamps}/1\ \mu\text{F} = 278 \text{ V/s}$

Hence, $di_R(0+)/dt = (-1/45)dv_C(0+)/dt = -278/45$

www.konkur.in

$$di_R(0+)/dt = \mathbf{-6.1778\ A/s}$$

$$\text{Also,}\quad i_R = i_C + i_L$$

$$di_R(0+)/dt = di_C(0+)/dt + di_L(0+)/dt$$

$$-6.1788 = di_C(0+)/dt + 0,\ \text{ or } di_C(0+)/dt = \mathbf{-6.1788\ A/s}$$

(c) As t approaches infinity, we have the equivalent circuit in Figure (b).

$$i_R(\infty) = i_L(\infty) = 80/45k = \mathbf{1.778\ mA}$$

$$i_C(\infty) = Cdv(\infty)/dt = \mathbf{0}.$$

www.konkur.in

Chapter 8, Solution 3.

At $t = 0^-$, $u(t) = 0$. Consider the circuit shown in Figure (a). $i_L(0^-) = 0$, and $v_R(0^-) = 0$. But, $-v_R(0^-) + v_C(0^-) + 10 = 0$, or $v_C(0^-) = -10V$.

(a) At $t = 0^+$, since the inductor current and capacitor voltage cannot change abruptly, the inductor current must still be equal to **0A**, the capacitor has a voltage equal to **–10V**. Since it is in series with the +10V source, together they represent a direct short at $t = 0^+$. This means that the entire 2A from the current source flows through the capacitor and not the resistor. Therefore, $v_R(0^+) =$ **0 V**.

(b) At $t = 0^+$, $v_L(0+) = 0$, therefore $Ldi_L(0+)/dt = v_L(0^+) = 0$, thus, $di_L/dt =$ **0A/s**, $i_C(0^+) = 2$ A, this means that $dv_C(0^+)/dt = 2/C =$ **8 V/s**. Now for the value of $dv_R(0^+)/dt$. Since $v_R = v_C + 10$, then $dv_R(0^+)/dt = dv_C(0^+)/dt + 0 =$ **8 V/s**.

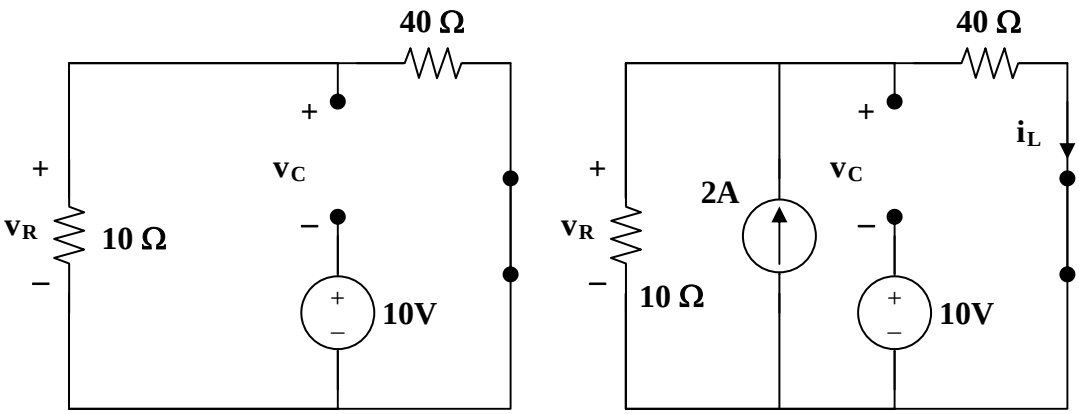

(a) **(b)**

(c) As t approaches infinity, we end up with the equivalent circuit shown in Figure (b).

$$i_L(\infty) = 10(2)/(40 + 10) = \mathbf{400\ mA}$$

$$v_C(\infty) = 2[10||40] - 10 = 16 - 10 = \mathbf{6V}$$

$$v_R(\infty) = 2[10||40] = \mathbf{16\ V}$$

www.konkur.in

Chapter 8, Solution 4.

(a) At $t = 0^-$, $u(-t) = 1$ and $u(t) = 0$ so that the equivalent circuit is shown in Figure (a).

$$i(0^-) = 40/(3 + 5) = 5A, \text{ and } v(0^-) = 5i(0^-) = 25V.$$

Hence, $i(0^+) = i(0^-) = \mathbf{5A}$

$v(0^+) = v(0^-) = \mathbf{25V}$

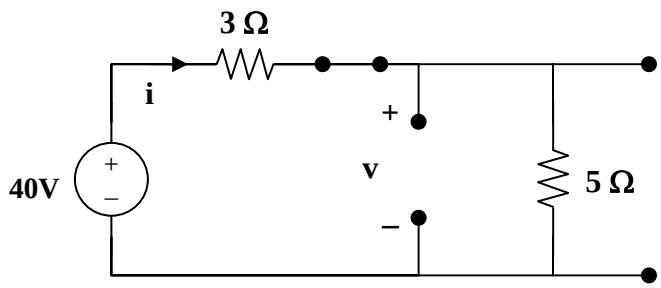

(a)

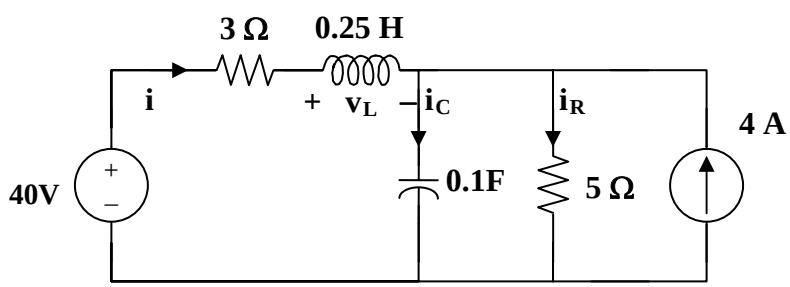

(b)

(b) $i_C = C dv/dt$ or $dv(0^+)/dt = i_C(0^+)/C$

For $t = 0^+$, $4u(t) = 4$ and $4u(-t) = 0$. The equivalent circuit is shown in Figure (b). Since i and v cannot change abruptly,

$$i_R = v/5 = 25/5 = 5A, \; i(0^+) + 4 = i_C(0^+) + i_R(0^+)$$

$$5 + 4 = i_C(0^+) + 5 \text{ which leads to } i_C(0^+) = 4$$

$$dv(0^+)/dt = 4/0.1 = \mathbf{40\ V/s}$$

Similarly, $v_L = L di/dt$ which leads to $di(0^+)/dt = v_L(0^+)/L$

$$3i(0^+) + v_L(0^+) + v(0^+) = 0$$

www.konkur.in

$$15 + v_L(0^+) + 25 = 0 \text{ or } v_L(0^+) = -40$$

$$di(0^+)/dt = -40/0.25 = \mathbf{-160\ A/s}$$

(c) As t approaches infinity, we have the equivalent circuit in Figure (c).

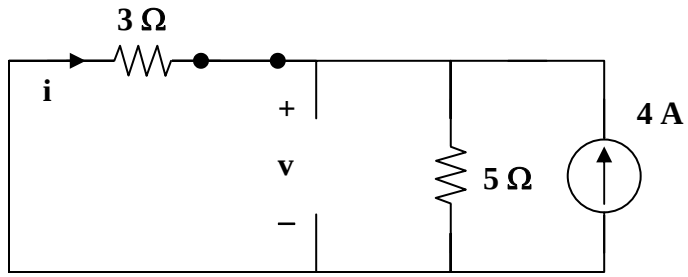

(c)

$$i(\infty) = -5(4)/(3 + 5) = \mathbf{-2.5\ A}$$

$$v(\infty) = 5(4 - 2.5) = \mathbf{7.5\ V}$$

www.konkur.in

Chapter 8, Solution 5.

(a) For $t < 0$, $4u(t) = 0$ so that the circuit is not active (all initial conditions = 0).

$$i_L(0-) = 0 \text{ and } v_C(0-) = 0.$$

For $t = 0+$, $4u(t) = 4$. Consider the circuit below.

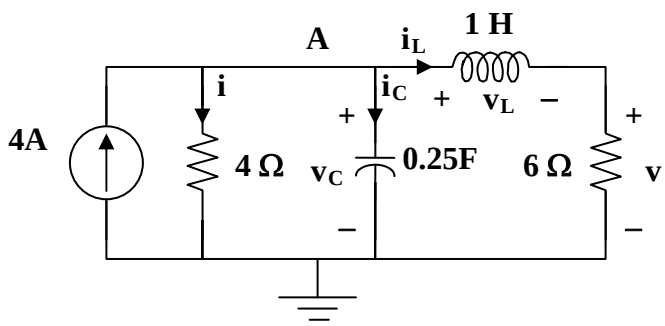

Since the 4-ohm resistor is in parallel with the capacitor,

$$i(0+) = v_C(0+)/4 = 0/4 = \mathbf{0\ A}$$

Also, since the 6-ohm resistor is in series with the inductor,
$v(0+) = 6i_L(0+) = \mathbf{0V}$.

(b) $di(0+)/dt = d(v_R(0+)/R)/dt = (1/R)dv_R(0+)/dt = (1/R)dv_C(0+)/dt$

$$= (1/4)4/0.25 \text{ A/s} = \mathbf{4\ A/s}$$

$v = 6i_L$ or $dv/dt = 6di_L/dt$ and $dv(0+)/dt = 6di_L(0+)/dt = 6v_L(0+)/L = 0$

Therefore $dv(0+)/dt = \mathbf{0\ V/s}$

(c) As t approaches infinity, the circuit is in steady-state.

$$i(\infty) = 6(4)/10 = \mathbf{2.4\ A}$$

$$v(\infty) = 6(4 - 2.4) = \mathbf{9.6\ V}$$

www.konkur.in

Chapter 8, Solution 6.

(a) Let i = the inductor current. For $t < 0$, $u(t) = 0$ so that

$$i(0) = 0 \text{ and } v(0) = 0.$$

For $t > 0$, $u(t) = 1$. Since, $v(0+) = v(0-) = 0$, and $i(0+) = i(0-) = 0$.

$$v_R(0+) = Ri(0+) = \mathbf{0\ V}$$

Also, since $v(0+) = v_R(0+) + v_L(0+) = 0 = 0 + v_L(0+)$ or $v_L(0+) = \mathbf{0\ V}$. (1)

(b) Since $i(0+) = 0$, $i_C(0+) = V_S/R_S$

But, $i_C = Cdv/dt$ which leads to $dv(0+)/dt = V_S/(CR_S)$ (2)

From (1), $dv(0+)/dt = dv_R(0+)/dt + dv_L(0+)/dt$ (3)

$v_R = iR$ or $dv_R/dt = Rdi/dt$ (4)

But, $v_L = Ldi/dt$, $v_L(0+) = 0 = Ldi(0+)/dt$ and $di(0+)/dt = 0$ (5)

From (4) and (5), $dv_R(0+)/dt = \mathbf{0\ V/s}$

From (2) and (3), $dv_L(0+)/dt = dv(0+)/dt = \mathbf{V_s/(CR_s)}$

(c) As t approaches infinity, the capacitor acts like an open circuit, while the inductor acts like a short circuit.

$$v_R(\infty) = \mathbf{[R/(R + R_s)]V_s}$$

$$v_L(\infty) = \mathbf{0\ V}$$

www.konkur.in

Chapter 8, Solution 7.

$\alpha = [R/(2L)] = 20x10^3/(2x0.2x10^{-3}) = 50x10^6$

$\omega_o = [1/(LC)^{0.5}] = 1/(0.2x10^{-3}x5x10^{-6})^{0.5} = 3.162\ x10^4$

$$\alpha > \omega_o \quad \longrightarrow \quad \underline{\text{overdamped}}$$

overdamped

www.konkur.in

Chapter 8, Solution 8.

Design a problem to help other students better understand source-free *RLC* circuits.

Although there are many ways to work this problem, this is an example based on the same kind of problem asked in the third edition.

Problem

The branch current in an *RLC* circuit is described by the differential equation

$$\frac{d^2 i}{dt^2} + 6\frac{di}{dt} + 9i = 0$$

and the initial conditions are $i(0) = 0$, $di(0)/dt = 4$. Obtain the characteristic equation and determine $i(t)$ for $t > 0$.

Solution

$\mathbf{s^2 + 6s + 9 = 0}$, thus $s_{1,2} = \dfrac{-6 \pm \sqrt{6^2 - 36}}{2} = -3$, repeated roots.

$$i(t) = [(A + Bt)e^{-3t}], \quad i(0) = 0 = A$$

$$di/dt = [Be^{-3t}] + [-3(Bt)e^{-3t}]$$

$$di(0)/dt = 4 = B.$$

Therefore, $i(t) = \mathbf{[4te^{-3t}]\ A}$

www.konkur.in

Chapter 8, Solution 9.

$s^2 + 10s + 25 = 0$, thus $s_{1,2} = \dfrac{-10 \pm \sqrt{10-10}}{2} = -5$, repeated roots.

$$i(t) = [(A + Bt)e^{-5t}], \quad i(0) = 10 = A$$

$$di/dt = [Be^{-5t}] + [-5(A + Bt)e^{-5t}]$$

$$di(0)/dt = 0 = B - 5A = B - 50 \text{ or } B = 50.$$

Therefore, $i(t) = \mathbf{[(10 + 50t)e^{-5t}]\ A}$

www.konkur.in

Chapter 8, Solution 10.

$$s^2 + 5s + 4 = 0, \text{ thus } s_{1,2} = \frac{-5 \pm \sqrt{25-16}}{2} = -4, -1.$$

$$v(t) = (Ae^{-4t} + Be^{-t}), \; v(0) = 0 = A + B, \text{ or } B = -A$$

$$dv/dt = (-4Ae^{-4t} - Be^{-t})$$

$$dv(0)/dt = 10 = -4A - B = -3A \text{ or } A = -10/3 \text{ and } B = 10/3.$$

Therefore, $v(t) = \mathbf{(-(10/3)e^{-4t} + (10/3)e^{-t})\ V}$

www.konkur.in

Chapter 8, Solution 11.

$$s^2 + 2s + 1 = 0, \text{ thus } s_{1,2} = \frac{-2 \pm \sqrt{4-4}}{2} = -1, \text{ repeated roots.}$$

$$v(t) = [(A + Bt)e^{-t}], \; v(0) = 10 = A$$

$$dv/dt = [Be^{-t}] + [-(A + Bt)e^{-t}]$$

$$dv(0)/dt = 0 = B - A = B - 10 \text{ or } B = 10.$$

Therefore, $v(t) = \mathbf{[(10 + 10t)e^{-t}]\ V}$

www.konkur.in

Chapter 8, Solution 12.

(a) Overdamped when $C > 4L/(R^2) = 4x1.5/2500 = 2.4x10^{-3}$, or

$$C > \mathbf{2.4\ mF}$$

(b) Critically damped when $C = \mathbf{2.4\ mF}$

(c) Underdamped when $C < \mathbf{2.4\ mF}$

www.konkur.in

Chapter 8, Solution 13.

Let R||60 = R_o. For a series RLC circuit,

$$\omega_o = \frac{1}{\sqrt{LC}} = \frac{1}{\sqrt{0.01x4}} = 5$$

For critical damping, $\omega_o = \alpha = R_o/(2L) = 5$

or $R_o = 10L = 40 = 60R/(60 + R)$

which leads to R = **120 ohms**

www.konkur.in

Chapter 8, Solution 14.

When the switch is in position A, $v(0^-) = 0$ and $i_L(0) = 80/40 = 2$ A. When the switch is in position B, we have a source-free series RCL circuit.

$$\alpha = \frac{R}{2L} = \frac{10}{2x4} = 1.25$$

$$\omega_o = \frac{1}{\sqrt{LC}} = \frac{1}{\sqrt{\frac{1}{4}x4}} = 1$$

When the switch is in position A, $v(0^-) = 0$. When the switch is in position B, we have a source-free series RCL circuit.

$$\alpha = \frac{R}{2L} = \frac{10}{2x4} = 1.25$$

$$\omega_o = \frac{1}{\sqrt{LC}} = \frac{1}{\sqrt{\frac{1}{4}x4}} = 1$$

Since $\alpha > \omega_o$, we have overdamped case.

$$s_{1,2} = -\alpha \pm \sqrt{\alpha^2 - \omega_o^2} = -1.25 \pm \sqrt{1.562} \quad -0.5 \text{ and } -2 \qquad 0.9336$$

$$v(t) = Ae^{-2t} + Be^{-0.5t} \qquad (1)$$

$$v(0) = 0 = A + B \qquad (2)$$

$$i_C(0) = C(dv(0)/dt) = -2 \text{ or } dv(0)/dt = -2/C = -8.$$

But $$\frac{dv(t)}{dt} = -2Ae^{-2t} - 0.5Be^{-0.5t}$$

$$\frac{dv(0)}{dt} = -2A - 0.5B = -8 \qquad (3)$$

Solving (2) and (3) gives A= 1.3333 and B = –1.3333

$$v(t) = \mathbf{5.333e^{-2t} - 5.333e^{-0.5t}\ V}.$$

www.konkur.in

Chapter 8, Solution 15.

Given that $s_1 = -10$ and $s_2 = -20$, we recall that

$$s_{1,2} = -\alpha \pm \sqrt{\alpha^2 - \omega_o^2} = -10, -20$$

Clearly, $s_1 + s_2 = -2\alpha = -30$ or $\alpha = 15 = R/(2L)$ or $R = 60L$ (1)

$$s_1 = -15 + \sqrt{15^2 - \omega_o^2} = -10 \text{ which leads to } 15^2 - \omega_o{}^2 = 25$$

or $\omega_o = \sqrt{225 - 25} = \sqrt{200} = 1/\sqrt{LC}$, thus $LC = 1/200$ (2)

Since we have a series RLC circuit, $i_L = i_C = Cdv_C/dt$ which gives,

$$i_L/C = dv_C/dt = [200e^{-20t} - 300e^{-30t}] \text{ or } i_L = 100C[2e^{-20t} - 3e^{-30t}]$$

But, i is also $= 20\{[2e^{-20t} - 3e^{-30t}]x10^{-3}\} = 100C[2e^{-20t} - 3e^{-30t}]$

Therefore, $C = (0.02/10^2) =$ **200 μF**

$L = 1/(200C) =$ **25 H**

$R = 30L =$ **750 ohms**

www.konkur.in

Chapter 8, Solution 16.

At $t = 0$, $i(0) = 0$, $v_C(0) = 40x30/50 = 24V$

For $t > 0$, we have a source-free RLC circuit.

$$\alpha = R/(2L) = (40 + 60)/5 = 20 \text{ and } \omega_o = \frac{1}{\sqrt{LC}} = \frac{1}{\sqrt{10^{-3}x2.5}} = 20$$

$\omega_o = \alpha$ leads to critical damping

$$i(t) = [(A + Bt)e^{-20t}], \; i(0) = 0 = A$$

$$di/dt = \{[Be^{-20t}] + [-20(Bt)e^{-20t}]\},$$

$$\text{but } di(0)/dt = -(1/L)[Ri(0) + v_C(0)] = -(1/2.5)[0 + 24]$$

Hence, $B = -9.6$ or $i(t) = \mathbf{[-9.6te^{-20t}]\ A}$

www.konkur.in

Chapter 8, Solution 17.

$$i(0) = I_0 = 0,\ v(0) = V_0 = 4x5 = 20$$

$$\frac{di(0)}{dt} = -\frac{1}{L}(RI_0 + V_0) = -4(0+20) = -80$$

$$\omega_o = \frac{1}{\sqrt{LC}} = \frac{1}{\sqrt{\frac{1}{4}\frac{1}{25}}} = 10$$

$$\alpha = \frac{R}{2L} = \frac{10}{2\frac{1}{4}} = 20,\ which\, is > \omega_o.$$

$$s = -\alpha \pm \sqrt{\alpha^2 - \omega_o^2} = -20 \pm \sqrt{300} = -20 \pm 10\sqrt{3} = -2.679, -37.32$$

$$i(t) = A_1 e^{-2.679t} + A_2 e^{-37.32t}$$

$$i(0) = 0 = A_1 + A_2,\ \frac{di(0)}{dt} = -2.679A_1 - 37.32A_2 = -80$$

$$This\, leads\, to\, A_1 = -2.309 = -A_2$$

$$i(t) = 2.309\left(e^{-37.32t} - e^{-2.679t}\right)$$

$$Since, v(t) = \frac{1}{C}\int_0^t i(t)dt + 20,\ we\, get$$

v(t) = **[21.55e$^{-2.679t}$ – 1.55e$^{-37.32t}$] V**

www.konkur.in

Chapter 8, Solution 18.

When the switch is off, we have a source-free parallel RLC circuit.

$$\omega_o = \frac{1}{\sqrt{LC}} = \frac{1}{\sqrt{0.25x1}} = 2, \qquad \alpha = \frac{1}{2RC} = 0.5$$

$$\alpha < \omega_o \qquad \longrightarrow \qquad \text{underdamped case} \quad \omega_{\text{d}} = \sqrt{\omega_o{}^2 - \alpha^2} = \sqrt{4 - 0.25} = 1.936$$

$I_o(0)$ = i(0) = initial inductor current = 100/5 = 20 A

$V_o(0)$ = v(0) = initial capacitor voltage = 0 V

$$v(t) = e^{-\alpha t}(A_1 \cos(\omega_d t) + A_2 \sin(\omega_d t)) = e^{-0.5\alpha t}(A_1 \cos(1.936t) + A_2 \sin(1.936t))$$

v(0) =0 = A_1

$$\frac{dv}{dt} = e^{-0.5\alpha t}(-0.5)(A_1 \cos(1.936t) + A_2 \sin(1.936t)) + e^{-0.5\alpha t}(-1.936A_1 \sin(1.936t) + 1.936A_2 \cos(1.936t))$$

$$\frac{dv(0)}{dt} = -\frac{(V_o + RI_o)}{RC} = -\frac{(0+20)}{1} = -20 = -0.5A_1 + 1.936A_2 \qquad \longrightarrow \qquad A_2 = -10.333$$

Thus,

$$\underline{\boldsymbol{v(t) = [-10.333e^{-0.5t}\sin(1.936t)]volts}}$$

www.konkur.in

Chapter 8, Solution 19.

For $t < 0$, the equivalent circuit is shown in Figure (a).

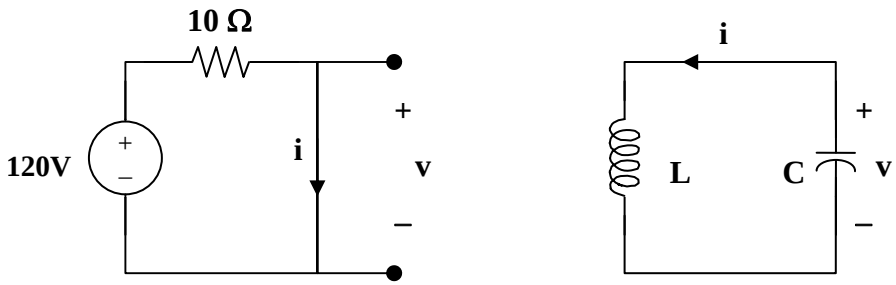

(a) **(b)**

$$i(0) = 120/10 = 12, \quad v(0) = 0$$

For $t > 0$, we have a series RLC circuit as shown in Figure (b) with $R = 0 = \alpha$.

$$\omega_o = \frac{1}{\sqrt{LC}} = \frac{1}{\sqrt{4}} = 0.5 = \omega_d$$

$$i(t) = [A\cos 0.5t + B\sin 0.5t], \quad i(0) = 12 = A$$

$$v = -L\,di/dt, \text{ and } -v/L = di/dt = 0.5[-12\sin 0.5t + B\cos 0.5t],$$

$$\text{which leads to } -v(0)/L = 0 = B$$

$$\text{Hence,} \qquad i(t) = 12\cos 0.5t \text{ A and } v = 0.5$$

$$\text{However, } v = -L\,di/dt = -4(0.5)[-12\sin 0.5t] = \mathbf{24\sin(0.5t)\ V}$$

www.konkur.in

Chapter 8, Solution 20.

For $t < 0$, the equivalent circuit is as shown below.

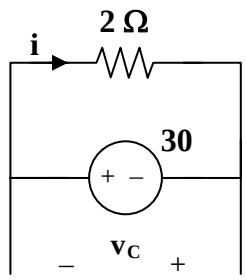

$$v(0) = -30 \text{ V and } i(0) = 30/2 = 15 \text{ A}$$

For $t > 0$, we have a series RLC circuit.

$$\alpha = R/(2L) = 2/(2x0.5) = 2$$

$$\omega_o = 1/\sqrt{LC} = 1/\sqrt{0.5x1/4} = 2\sqrt{2}$$

Since α is less than ω_o, we have an under-damped response.

$$\omega_d = \sqrt{\omega_o^2 - \alpha^2} = \sqrt{8-4} = 2$$

$$i(t) = (A\cos(2t) + B\sin(2t))e^{-2t}$$

$$i(0) = 15 = A$$

$$di/dt = -2(15\cos(2t) + B\sin(2t))e^{-2t} + (-2x15\sin(2t) + 2B\cos(2t))e^{-\alpha t}$$

$$di(0)/dt = -30 + 2B = -(1/L)[Ri(0) + v_C(0)] = -2[30 - 30] = 0$$

Thus, $B = 15$ and $i(t) =$ **$(15\cos(2t) + 15\sin(2t))e^{-2t}$ A**

www.konkur.in

Chapter 8, Solution 21.

By combining some resistors, the circuit is equivalent to that shown below.
60||(15 + 25) = 24 ohms.

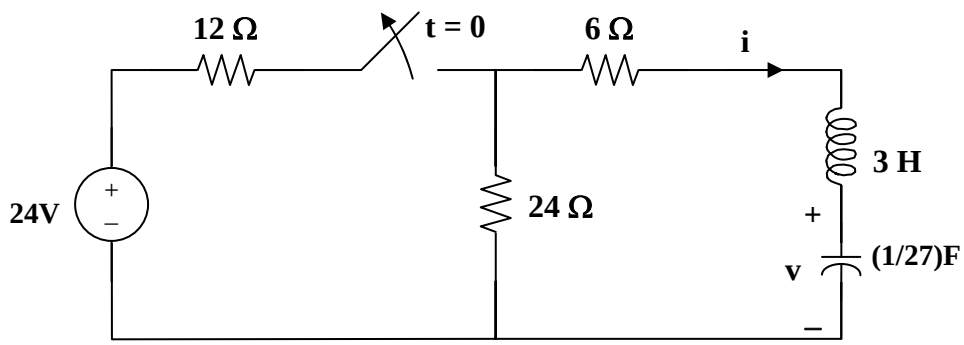

At t = 0-, i(0) = 0, v(0) = 24x24/36 = 16V

For t > 0, we have a series RLC circuit. R = 30 ohms, L = 3 H, C = (1/27) F

$$\alpha = R/(2L) = 30/6 = 5$$

$$\omega_o = 1/\sqrt{LC} = 1/\sqrt{3x1/27} = 3, \text{ clearly } \alpha > \omega_o \text{ (overdamped response)}$$

$$s_{1,2} = -\alpha \pm \sqrt{\alpha^2 - \omega_o^2} = -5 \pm \sqrt{5^2 - 3^2} = -9, -1$$

$$v(t) = [Ae^{-t} + Be^{-9t}], \quad v(0) = 16 = A + B \qquad (1)$$

$$i = Cdv/dt = C[-Ae^{-t} - 9Be^{-9t}]$$

$$i(0) = 0 = C[-A - 9B] \text{ or } A = -9B \qquad (2)$$

From (1) and (2), B = -2 and A = 18.

Hence, $v(t) = \mathbf{(18e^{-t} - 2e^{-9t})\ V}$

www.konkur.in

Chapter 8, Solution 22.

Compare the characteristic equation with eq. (8.8), i.e.

$$s^2 + \frac{R}{L}s + \frac{1}{LC} = 0$$

we obtain

$$\frac{R}{L} = 100 \quad \longrightarrow \quad L = \frac{R}{100} = \frac{2000}{100} = \underline{20H}$$

$$\frac{1}{LC} = 10^6 \quad \rightarrow \quad C = \frac{1}{10^6 L} = \frac{10^{-6}}{20} = \underline{50\ \text{nF}}$$

www.konkur.in

Chapter 8, Solution 23.

Let $C_o = C + 0.01$. For a parallel RLC circuit,

$$\alpha = 1/(2RC_o), \quad \omega_o = 1/\sqrt{LC_o}$$

$\alpha = 1 = 1/(2RC_o)$, we then have $C_o = 1/(2R) = 1/20 = 50$ mF

$$\omega_o = 1/\sqrt{0.02x0.05} = 141.42 > \alpha \text{ (underdamped)}$$

$C_o = C + 10$ mF $= 50$ mF or $C =$ **40 mF**

www.konkur.in

Chapter 8, Solution 24.

When the switch is in position A, the inductor acts like a short circuit so

$$i(0^-) = 4$$

When the switch is in position B, we have a source-free parallel RCL circuit

$$\alpha = \frac{1}{2RC} = \frac{1}{2x10x10x10^{-3}} = 5$$

$$\omega_o = \frac{1}{\sqrt{LC}} = \frac{1}{\sqrt{\frac{1}{4}x10x10^{-3}}} = 20$$

Since $\alpha < \omega_o$, we have an underdamped case.

$$s_{1,2} = -5 + \sqrt{25 - 400} = -5 + j19.365$$

$$i(t) = e^{-5t}\left(A_1 \cos 19.365t + A_2 \sin 19.365t\right)$$

$$i(0) = 4 = A_1$$

$$v = L\frac{di}{dt} \quad \longrightarrow \quad \frac{di(0)}{dt} = \frac{v(0)}{L} = 0$$

$$\frac{di}{dt} = e^{-5t}\left(-5A_1 \cos 19.365t - 5A_2 \sin 19.365t - 19.365A_1 \sin 19.365t + 19.365A_2 \cos 19.365t\right)$$

0 = [di(0)/dt] = $-5A_1 + 19.365A_2$ or $A_2 = 20/19.365 = 1.0328$

i(t) = **e^{-5t}[4cos(19.365t) + 1.0328sin(19.365t)] A**

www.konkur.in

Chapter 8, Solution 25.

Using Fig. 8.78, design a problem to help other students to better understand source-free *RLC* circuits.

Although there are many ways to work this problem, this is an example based on the same kind of problem asked in the third edition.

Problem

In the circuit in Fig. 8.78, calculate $i_o(t)$ and $v_o(t)$ for $t > 0$.

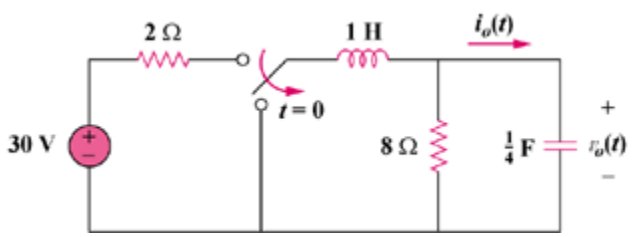

Figure 8.78

Solution

In the circuit in Fig. 8.76, calculate $i_o(t)$ and $v_o(t)$ for t>0.

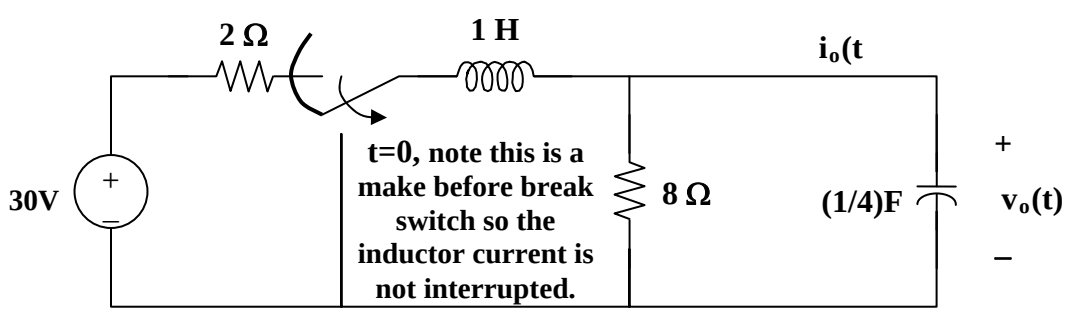

Figure 8.78 For Problem 8.25.

At $t = 0^-$, $v_o(0) = (8/(2 + 8)(30) = 24$

For t > 0, we have a source-free parallel RLC circuit.

$$\alpha = 1/(2RC) = ¼$$

$$\omega_o = 1/\sqrt{LC} = 1/\sqrt{1x1/4} = 2$$

www.konkur.in

Since α is less than ω_o, we have an under-damped response.

$$\omega_d = \sqrt{\omega_o^2 - \alpha^2} = \sqrt{4-(1/16)} = 1.9843$$

$$v_o(t) = (A_1\cos\omega_d t + A_2\sin\omega_d t)e^{-\alpha t}$$

$v_o(0) = 30(8/(2+8)) = 24 = A_1$ and $i_o(t) = C(dv_o/dt) = 0$ when $t = 0$.

$$dv_o/dt = -\alpha(A_1\cos\omega_d t + A_2\sin\omega_d t)e^{-\alpha t} + (-\omega_d A_1\sin\omega_d t + \omega_d A_2\cos\omega_d t)e^{-\alpha t}$$

at $t = 0$, we get $dv_o(0)/dt = 0 = -\alpha A_1 + \omega_d A_2$

Thus, $A_2 = (\alpha/\omega_d)A_1 = (1/4)(24)/1.9843 = 3.024$

$v_o(t) =$ **$(24\cos 1.9843t + 3.024\sin 1.9843t)e^{-t/4}$ volts**.

$i_0(t) = Cdv/dt = 0.25[-24(1.9843)\sin 1.9843t + 3.024(1.9843)\cos 1.9843t - 0.25(24\cos 1.9843t) - 0.25(3.024\sin 1.9843t)]e^{-t/4}$
$=$ **$[-12.095\sin 1.9843t]e^{-t/4}$ A**.

www.konkur.in

Chapter 8, Solution 26.

$$s^2 + 2s + 5 = 0, \text{ which leads to } s_{1,2} = \frac{-2 \pm \sqrt{4-20}}{2} = -1 \pm j4$$

These roots indicate an underdamped circuit which has the generalized solution given as:

$$i(t) = I_s + [(A_1\cos(4t) + A_2\sin(4t))e^{-t}],$$

At $t = \infty$, $(di(t)/dt) = 0$ and $(d^2i(t)/dt^2) = 0$ so that
$I_s = 10/5 = 2$ (from $(d^2i(t)/dt^2)+2(di(t)/dt)+5 = 10$)

$$i(0) = 2 = 2 + A_1, \text{ or } A_1 = 0$$

$$di/dt = [(4A_2\cos(4t))e^{-t}] + [(-A_2\sin(4t))e^{-t}] = 4 = 4A_2, \text{ or } A_2 = 1$$

$$i(t) = \mathbf{[2 + \sin(4te^{-t})]\ amps}$$

www.konkur.in

Chapter 8, Solution 27.

$$s^2 + 4s + 8 = 0 \text{ leads to } s = \frac{-4 \pm \sqrt{16-32}}{2} = -2 \pm j2$$

$$v(t) = V_s + (A_1\cos 2t + A_2\sin 2t)e^{-2t}$$

$$8V_s = 24 \text{ means that } V_s = 3$$

$$v(0) = 0 = 3 + A_1 \text{ leads to } A_1 = -3$$

$$dv/dt = -2(A_1\cos 2t + A_2\sin 2t)e^{-2t} + (-2A_1\sin 2t + 2A_2\cos 2t)e^{-2t}$$

$$0 = dv(0)/dt = -2A_1 + 2A_2 \text{ or } A_2 = A_1 = -3$$

$$v(t) = \mathbf{[3 - 3(\cos(2t) + \sin(2t))e^{-2t}]\ volts}.$$

www.konkur.in

Chapter 8, Solution 28.

The characteristic equation is

$$Ls^2 + Rs + \frac{1}{C} = 0 \quad \longrightarrow \quad \frac{1}{2}s^2 + 4s + \frac{1}{0.2} = 0 \quad \longrightarrow \quad s^2 + 8s + 10 = 0$$

$$s_{1,2} = \frac{-8 \pm \sqrt{64-40}}{2} = \quad -6.45 \text{ and } -1.5505$$

$$i(t) = i_s + Ae^{-6.45t} + Be^{-1.5505t}$$

But $[i_s/C] = 10$ or $i_s = 0.2x10 = 2$

$$i(t) = 2 + Ae^{-6.45t} + Be^{-1.5505t}$$

$i(0) = 1 = 2 + A + B$ or $A + B = -1$ or $A = -1-B$ (1)

$$\frac{di(t)}{dt} = -6.45Ae^{-6.45t} - 1.5505Be^{-1.5505t}$$

$$but \ \frac{di(0)}{dt} = 0 = -6.45A - 1.5505B \qquad (2)$$

Solving (1) and (2) gives $-6.45(-1-B) - 1.5505B = 0$ or $(6.45-1.5505)B = -6.45$
$B = -6.45/(4.9) = -1.3163$ and $A = -1-1.3163 = -2.3163$

$A = -2.3163$, $B = -1.3163$
Hence,

$$i(t) = \mathbf{[2-2.3163e^{-6.45t} - 1.3163e^{-1.5505t}]\ A}.$$

www.konkur.in

Chapter 8, Solution 29.

(a) $s^2 + 4 = 0$ which leads to $s_{1,2} = \pm j2$ (an undamped circuit)

$$v(t) = V_s + A\cos 2t + B\sin 2t$$

$$4V_s = 12 \text{ or } V_s = 3$$

$$v(0) = 0 = 3 + A \text{ or } A = -3$$

$$dv/dt = -2A\sin 2t + 2B\cos 2t$$

$dv(0)/dt = 2 = 2B$ or $B = 1$, therefore $v(t) =$ **$(3 - 3\cos 2t + \sin 2t)$ V**

(b) $s^2 + 5s + 4 = 0$ which leads to $s_{1,2} = -1, -4$

$$i(t) = (I_s + Ae^{-t} + Be^{-4t})$$

$$4I_s = 8 \text{ or } I_s = 2$$

$$i(0) = -1 = 2 + A + B, \text{ or } A + B = -3 \qquad (1)$$

$$di/dt = -Ae^{-t} - 4Be^{-4t}$$

$$di(0)/dt = 0 = -A - 4B, \text{ or } B = -A/4 \qquad (2)$$

From (1) and (2) we get $A = -4$ and $B = 1$

$$i(t) = \mathbf{(2 - 4e^{-t} + e^{-4t})\ A}$$

(c) $s^2 + 2s + 1 = 0$, $s_{1,2} = -1, -1$

$$v(t) = [V_s + (A + Bt)e^{-t}],\ V_s = 3.$$

$$v(0) = 5 = 3 + A \text{ or } A = 2$$

$$dv/dt = [-(A + Bt)e^{-t}] + [Be^{-t}]$$

$$dv(0)/dt = -A + B = 1 \text{ or } B = 2 + 1 = 3$$

$$v(t) = \mathbf{[3 + (2 + 3t)e^{-t}]\ V}$$

www.konkur.in

(d) $s^2 + 2s + 5 = 0$, $s_{1,2} = -1 + j2, -1 - j2$

$$i(t) = [I_s + (A\cos 2t + B\sin 2t)e^{-t}], \text{ where } 5I_s = 10 \text{ or } I_s = 2$$

$$i(0) = 4 = 2 + A \text{ or } A = 2$$

$$di/dt = [-(A\cos 2t + B\sin 2t)e^{-t}] + [(-2A\sin 2t + 2B\cos 2t)e^{-t}]$$

$$di(0)/dt = -2 = -A + 2B \text{ or } B = 0$$

$$i(t) = \mathbf{[2 + (2\cos 2t)e^{-t}]\ A}$$

www.konkur.in

Chapter 8, Solution 30.

The step responses of a series RLC circuit are

$v_C(t) = [40–10e^{–2000t}–10e^{–4000t}]$ volts, $t > 0$ and
$i_L(t) = [3e^{–2000t}+6e^{–4000t}]$ m A, $t > 0$.

(a) Find C. (b) Determine what type of damping exhibited by the circuit.

Solution

Step 1. For a series RLC circuit, $i_R(t) = i_L(t) = i_C(t)$.

We can determine C from $i_C(t) = i_L(t) = C(dv_C/dt)$ and we can determine that the circuit is **overdamped** since the exponent value are real and negative.

Step 2. $C(dv_C/dt) = C[20{,}000e^{–2000t}+40{,}000e^{–4000t}] = 0.003e^{–2000t}+0.006e^{–4000t}$ or

$$C = 0.003/20{,}000 = \mathbf{150\ \eta F}.$$

www.konkur.in

Chapter 8, Solution 31.

For t = 0-, we have the equivalent circuit in Figure (a). For t = 0+, the equivalent circuit is shown in Figure (b). By KVL,

$$v(0+) = v(0-) = 40, \quad i(0+) = i(0-) = 1$$

By KCL, $2 = i(0+) + i_1 = 1 + i_1$ which leads to $i_1 = 1$. By KVL, $-v_L + 40i_1 + v(0+) = 0$ which leads to $v_L(0+) = 40x1 + 40 = 80$

$$v_L(0+) = \mathbf{80\ V}, \quad v_C(0+) = \mathbf{40\ V}$$

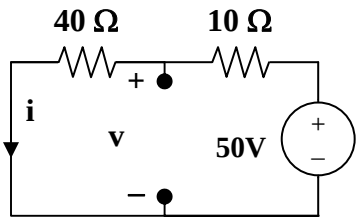

(a)

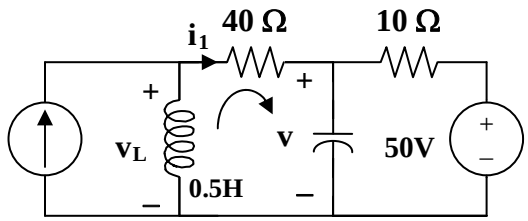

(b)

www.konkur.in

Chapter 8, Solution 32.

For t = 0-, the equivalent circuit is shown below.

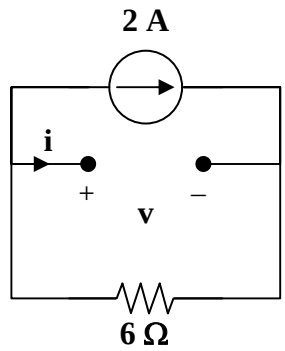

$$i(0-) = 0, \quad v(0-) = -2x6 = -12V$$

For t > 0, we have a series RLC circuit with a step input.

$$\alpha = R/(2L) = 6/2 = 3, \quad \omega_o = 1/\sqrt{LC} = 1/\sqrt{0.04}$$

$$s = -3 \pm \sqrt{9-25} = -3 \pm j4$$

Thus, $v(t) = V_f + [(A\cos 4t + B\sin 4t)e^{-3t}]$

where V_f = final capacitor voltage = 50 V

$$v(t) = 50 + [(A\cos 4t + B\sin 4t)e^{-3t}]$$

$v(0) = -12 = 50 + A$ which gives $A = -62$

$$i(0) = 0 = C\,dv(0)/dt$$

$$dv/dt = [-3(A\cos 4t + B\sin 4t)e^{-3t}] + [4(-A\sin 4t + B\cos 4t)e^{-3t}]$$

$0 = dv(0)/dt = -3A + 4B$ or $B = (3/4)A = -46.5$

$$v(t) = \mathbf{\{50 + [(-62\cos 4t - 46.5\sin 4t)e^{-3t}]\}\ V}$$

www.konkur.in

Chapter 8, Solution 33.

We may transform the current sources to voltage sources. For $t = 0^-$, the equivalent circuit is shown in Figure (a).

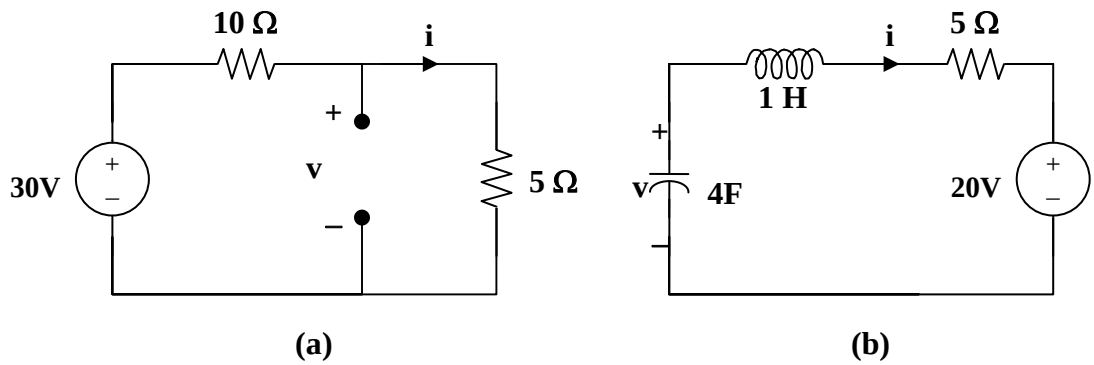

(a) **(b)**

$$i(0) = 30/15 = 2 \text{ A}, \quad v(0) = 5\text{x}30/15 = 10 \text{ V}$$

For t > 0, we have a series RLC circuit, shown in (b).

$$\alpha = R/(2L) = 5/2 = 2.5$$

$$\omega_o = 1/\sqrt{LC} = 1/\sqrt{4} = 0.5, \text{ clearly } \alpha > \omega_o \text{ (overdamped response)}$$

$$s_{1,2} = -\alpha \pm \sqrt{\alpha^2 - \omega_o^2} = -2.5 \pm \sqrt{6.25 - 0.25} = -4.949, -0.0505$$

$$v(t) = V_s + [A_1 e^{-4.949t} + A_2 e^{-0.0505t}], \quad V_s = 20.$$

$$v(0) = 10 = 20 + A_1 + A_2 \quad \text{or}$$
$$A_2 = -10 - A_1 \quad (1)$$

$$i(0) = C dv(0)/dt \text{ or } dv(0)/dt = -2/4 = -1/2$$

Hence, $$-0.5 = -4.949A_1 - 0.0505A_2 \quad (2)$$

From (1) and (2), $$-0.5 = -4.949A_1 + 0.0505(10 + A_1) \text{ or}$$
$$-4.898A_1 = -0.5 - 0.505 = -1.005$$

$$A_1 = 0.2052, \quad A_2 = -10.205$$

$$v(t) = \mathbf{[20 + 0.2052e^{-4.949t} - 10.205e^{-0.05t}]\ V}.$$

www.konkur.in

Chapter 8, Solution 34.

Before t = 0, the capacitor acts like an open circuit while the inductor behaves like a short circuit.

$$i(0) = 0,\ v(0) = 50\ \text{V}$$

For t > 0, the LC circuit is disconnected from the voltage source as shown below.

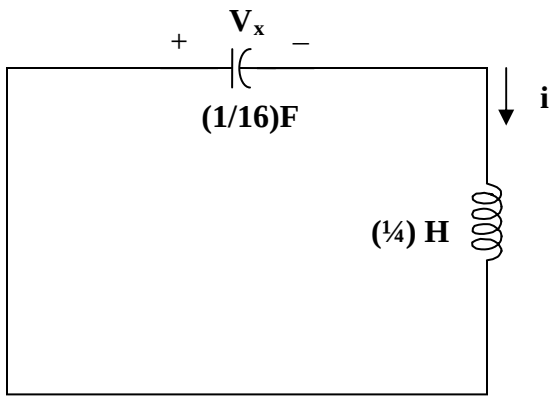

This is a lossless, source-free, series RLC circuit.

$$\alpha = R/(2L) = 0,\ \omega_o = 1/\sqrt{LC} = 1/\sqrt{\frac{1}{16}+\frac{1}{4}} = 8,\ s = \pm j8$$

Since α is equal to zero, we have an undamped response. Therefore,

$$i(t) = A_1\cos(8t) + A_2\sin(8t) \quad \text{where } i(0) = 0 = A_1$$

$$di(0)/dt = (1/L)v_L(0) = -(1/L)v(0) = -4x50 = -200$$

However, $di/dt = 8A_2\cos(8t)$, thus, $di(0)/dt = -200 = 8A_2$ which leads to $A_2 = -25$

Now we have $\quad i(t) = \mathbf{-25\sin(8t)\ A}$

www.konkur.in

Chapter 8, Solution 35.

Using Fig. 8.83, design a problem to help other students to better understand the step response of series *RLC* circuits.

Although there are many ways to work this problem, this is an example based on the same kind of problem asked in the third edition.

Problem

Determine $v(t)$ for $t > 0$ in the circuit in Fig. 8.83.

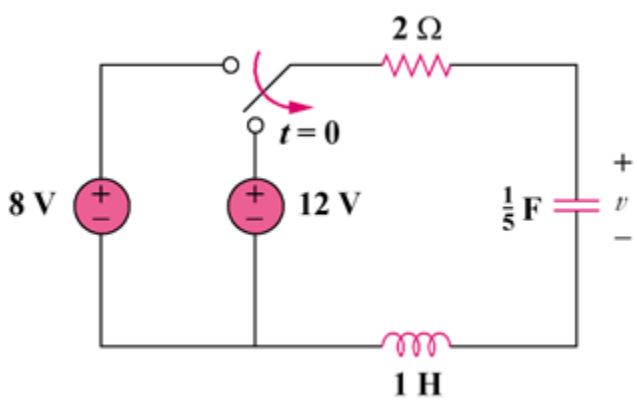

Figure 8.83

Solution

At t = 0-, $i_L(0) = 0$, $v(0) = v_C(0) = 8$ V

For t > 0, we have a series RLC circuit with a step input.

$$\alpha = R/(2L) = 2/2 = 1,\ \omega_o = 1/\sqrt{LC} = 1/\sqrt{1/5} = \sqrt{5}$$

$$s_{1,2} = -\alpha \pm \sqrt{\alpha^2 - \omega_o^2} = -1 \pm j2$$

$$v(t) = V_s + [(A\cos 2t + B\sin 2t)e^{-t}],\ V_s = 12.$$

$$v(0) = 8 = 12 + A \text{ or } A = -4,\ i(0) = Cdv(0)/dt = 0.$$

$$\text{But } dv/dt = [-(A\cos 2t + B\sin 2t)e^{-t}] + [2(-A\sin 2t + B\cos 2t)e^{-t}]$$

$$0 = dv(0)/dt = -A + 2B \text{ or } 2B = A = -4 \text{ and } B = -2$$

$$v(t) = \mathbf{\{12 - (4\cos 2t + 2\sin 2t)e^{-t}\ V}.$$

www.konkur.in

Chapter 8, Solution 36.

For $t = 0^-$, $3u(t) = 0$. Thus, $i(0) = 0$, and $v(0) = 20$ V.

For $t > 0$, we have the series RLC circuit shown below.

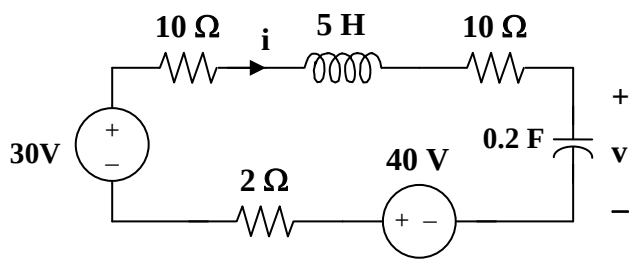

$$\alpha = R/(2L) = (2 + 5 + 1)/(2x5) = 0.8$$

$$\omega_o = 1/\sqrt{LC} = 1/\sqrt{5x0.2} = 1$$

$$s_{1,2} = -\alpha \pm \sqrt{\alpha^2 - \omega_o^2} = -0.8 \pm j0.6$$

$$v(t) = V_s + [(A\cos(0.6t) + B\sin(0.6t))e^{-0.8t}]$$

$$V_s = 30 + 40 = 70 \text{ V and } v(0) = 40 = 70 + A \text{ or } A = -30$$

$$i(0) = Cdv(0)/dt = 0$$

$$\text{But } dv/dt = [-0.8(A\cos(0.6t) + B\sin(0.6t))e^{-0.8t}] + [0.6(-A\sin(0.6t) + B\cos(0.6t))e^{-0.8t}]$$

$$0 = dv(0)/dt = -0.8A + 0.6B \text{ which leads to } B = 0.8x(-30)/0.6 = -40$$

$$v(t) = \mathbf{\{70 - [(30\cos(0.6t) + 40\sin(0.6t))e^{-0.8t}]\}\ V}$$

$$i = Cdv/dt$$

$$= 0.2\{[0.8(30\cos(0.6t) + 40\sin(0.6)t)e^{-0.8t}] + [0.6(30\sin(0.6t) - 40\cos(0.6t))e^{-0.8t}]\}$$

$$i(t) = \mathbf{10\sin(0.6t)e^{-0.8t}\ A}$$

www.konkur.in

Chapter 8, Solution 37.

For $t = 0^-$, the equivalent circuit is shown below.

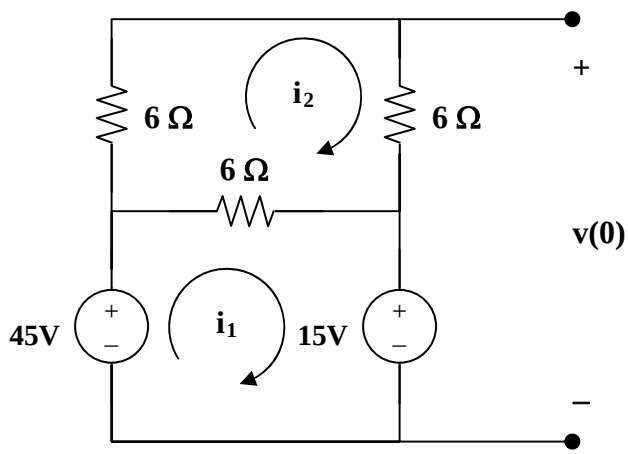

$18i_2 - 6i_1 = 0$ or $i_1 = 3i_2$ (1)

$-45 + 6(i_1 - i_2) + 15 = 0$ or $i_1 - i_2 = 30/6 = 5$ (2)

From (1) and (2), $(2/3)i_1 = 5$ or $i_1 = 7.5$ and $i_2 = i_1 - 5 = 2.5$

$$i(0) = i_1 = 7.5A$$

$$-15 - 6i_2 + v(0) = 0$$

$$v(0) = 15 + 6x2.5 = 30$$

For $t > 0$, we have a series RLC circuit.

$$R = 6||12 = 4$$

$$\omega_o = 1/\sqrt{LC} = 1/\sqrt{(1/2)(1/8)} = 4$$

$$\alpha = R/(2L) = (4)/(2x(1/2)) = 4$$

$\alpha = \omega_o$, therefore the circuit is critically damped

$$v(t) = V_s + [(A + Bt)e^{-4t}], \text{ and } V_s = 15$$

www.konkur.in

$$v(0) = 30 = 15 + A, \text{ or } A = 15$$

$$i_C = Cdv/dt = C[-4(15 + Bt)e^{-4t}] + C[(B)e^{-4t}]$$

To find $i_C(0)$ we need to look at the circuit right after the switch is opened. At this time, the current through the inductor forces that part of the circuit to act like a current source and the capacitor acts like a voltage source. This produces the circuit shown below. Clearly, $i_C(0+)$ must equal $-i_L(0) = -7.5$A.

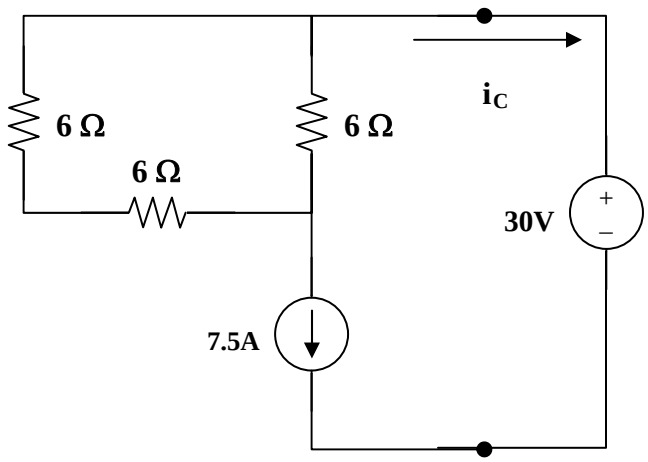

$$i_C(0) = -7.5 = C(-60 + B) \text{ which leads to } -60 = -60 + B \text{ or } B = 0$$

$$i_C = Cdv/dt = (1/8)[-4(15 + 0t)e^{-4t}] + (1/8)[(0)e^{-4t}]$$

$$i_C(t) = [-(1/2)(15)e^{-4t}]$$

$$i(t) = -i_C(t) = \mathbf{7.5e^{-4t}\ A}$$

www.konkur.in

Chapter 8, Solution 38.

At $t = 0^-$, the equivalent circuit is as shown.

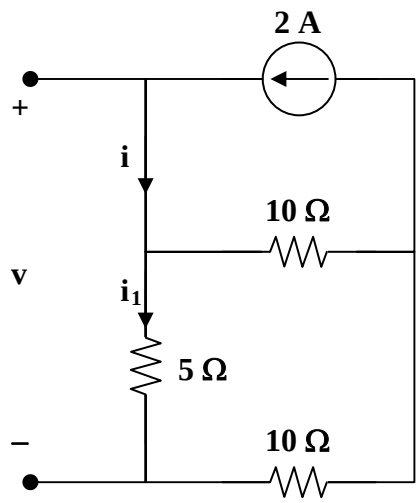

$i(0) = 2A, \quad i_1(0) = 10(2)/(10 + 15) = 0.8\ A$

$v(0) = 5i_1(0) = 4V$

For $t > 0$, we have a source-free series RLC circuit.

$R = 5||(10 + 10) = 4$ ohms

$\omega_o = 1/\sqrt{LC} = 1/\sqrt{(1/3)(3/4)} = 2$

$\alpha = R/(2L) = (4)/(2x(3/4)) = 8/3$

$s_{1,2} = -\alpha \pm \sqrt{\alpha^2 - \omega_o^2} = -4.431,\ -0.903$

$i(t) = [Ae^{-4.431t} + Be^{-0.903t}]$

$$i(0) = A + B = 2 \qquad (1)$$

$di(0)/dt = (1/L)[-Ri(0) + v(0)] = (4/3)(-4x2 + 4) = -16/3 = -5.333$

$$\text{Hence, } -5.333 = -4.431A - 0.903B \qquad (2)$$

From (1) and (2), $A = 1$ and $B = 1$.

$$i(t) = \mathbf{[e^{-4.431t} + e^{-0.903t}]\ A}$$

www.konkur.in

Chapter 8, Solution 39.

For $t = 0^-$, the source voltages are equal to zero thus, the initial conditions are v(0) = 0 and $i_L(0) = 0$.

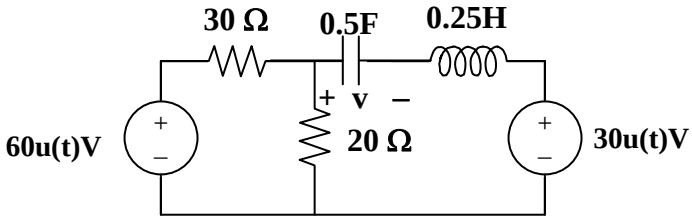

For $t > 0$, the circuit is shown above.

$$R = 20||30 = 12 \text{ ohms}$$

$$\omega_o = 1/\sqrt{LC} = 1/\sqrt{(1/2)(1/4)} = \sqrt{8}$$

$$\alpha = R/(2L) = (12)/(0.5) = 24$$

Since $\alpha > \omega_o$, we have an overdamped response.

$$s_{1,2} = -\alpha \pm \sqrt{\alpha^2 - \omega_o^2} = -47.83,\ -0.167$$

Thus, $v(t) = V_s + [Ae^{-47.83t} + Be^{-0.167t}]$, where
$V_s = [60/(30+20)]20-30 = -6$ volts.

$$v(0) = 0 = -6 + A + B \text{ or } 6 = A + B \qquad (1)$$

$$i(0) = Cdv(0)/dt = 0$$

But, $dv(0)/dt = -47.83A - 0.167B = 0$ or

$$B = -286.4A \qquad (2)$$

From (1) and (2), $A + (-286.4)A = 6$ or $A = 6/(-285.4) = -0.02102$ and
$B = -286.4x(-0.02102) = 6.02$

$$v(t) = \mathbf{[-6 + (-0.021e^{-47.83t} + 6.02e^{-0.167t})]\ volts}.$$

www.konkur.in

Chapter 8, Solution 40.

At $t = 0-$, $v_C(0) = 0$ and $i_L(0) = i(0) = (6/(6 + 2))4 = 3A$

For $t > 0$, we have a series RLC circuit with a step input as shown below.

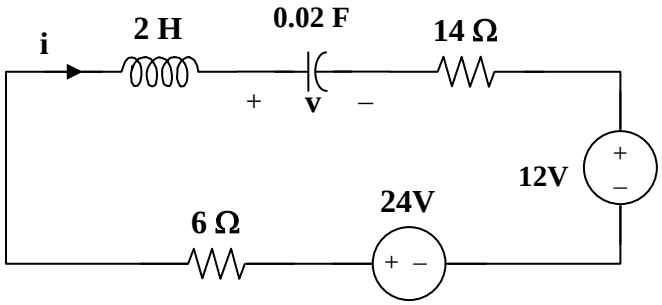

$$\omega_o = 1/\sqrt{LC} = 1/\sqrt{2x0.02} = 5$$

$$\alpha = R/(2L) = (6 + 14)/(2x2) = 5$$

Since $\alpha = \omega_o$, we have a critically damped response.

$$v(t) = V_s + [(A + Bt)e^{-5t}], \quad V_s = 24 - 12 = 12V$$

$$v(0) = 0 = 12 + A \text{ or } A = -12$$

$$i = Cdv/dt = C\{[Be^{-5t}] + [-5(A + Bt)e^{-5t}]\}$$

$$i(0) = 3 = C[-5A + B] = 0.02[60 + B] \text{ or } B = 90$$

$$\text{Thus, } i(t) = 0.02\{[90e^{-5t}] + [-5(-12 + 90t)e^{-5t}]\}$$

$$i(t) = \mathbf{\{(3 - 9t)e^{-5t}\}\ A}$$

www.konkur.in

Chapter 8, Solution 41.

At $t = 0^-$, the switch is open. $i(0) = 0$, and

$$v(0) = 5x100/(20 + 5 + 5) = 50/3$$

For $t > 0$, we have a series RLC circuit shown in Figure (a). After source transformation, it becomes that shown in Figure (b).

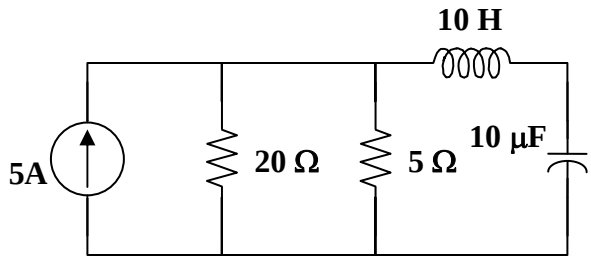

(a)

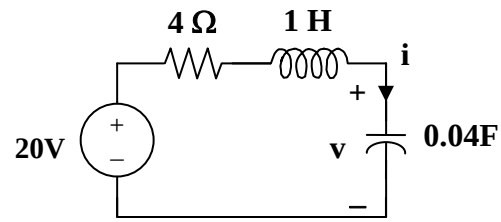

(b)

$$\omega_o = 1/\sqrt{LC} = 1/\sqrt{1x1/25} = 5$$

$$\alpha = R/(2L) = (4)/(2x1) = 2$$

$$s_{1,2} = -\alpha \pm \sqrt{\alpha^2 - \omega_o^2} = -2 \pm j4.583$$

Thus, $$v(t) = V_s + [(A\cos(\omega_d t) + B\sin(\omega_d t))e^{-2t}],$$

where $\omega_d = 4.583$ and $V_s = 20$

$v(0) = 50/3 = 20 + A$ or $A = -10/3$

$i(t) = Cdv/dt$
$= C(-2)[(A\cos(\omega_d t) + B\sin(\omega_d t))e^{-2t}] + C\omega_d[(-A\sin(\omega_d t) + B\cos(\omega_d t))e^{-2t}]$

$i(0) = 0 = -2A + \omega_d B$

$B = 2A/\omega_d = -20/(3x4.583) = -1.455$

$i(t) = C\{[(0\cos(\omega_d t) + (-2B - \omega_d A)\sin(\omega_d t))]e^{-2t}\}$

$= (1/25)\{[(2.91 + 15.2767)\sin(\omega_d t))]e^{-2t}\}$

$$i(t) = \mathbf{727.5\sin(4.583t)e^{-2t}\ mA}$$

www.konkur.in

Chapter 8, Solution 42.

For $t = 0-$, we have the equivalent circuit as shown in Figure (a).

$$i(0) = i(0) = 0, \text{ and } v(0) = 4 - 12 = -8V$$

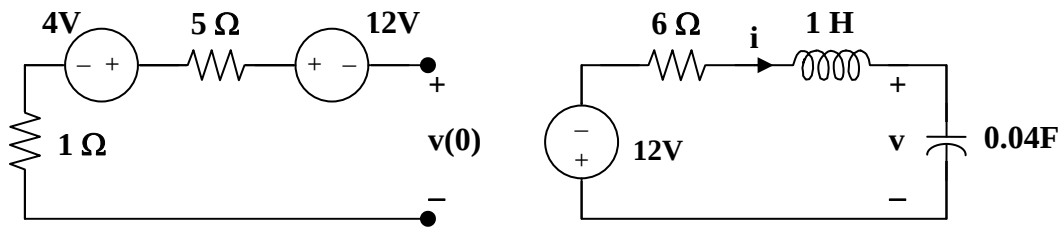

(a) **(b)**

For $t > 0$, the circuit becomes that shown in Figure (b) after source transformation.

$$\omega_o = 1/\sqrt{LC} = 1/\sqrt{1x1/25} = 5$$

$$\alpha = R/(2L) = (6)/(2) = 3$$

$$s_{1,2} = -\alpha \pm \sqrt{\alpha^2 - \omega_o^2} = -3 \pm j4$$

Thus, $$v(t) = V_s + [(A\cos 4t + B\sin 4t)e^{-3t}], \quad V_s = -12$$

$$v(0) = -8 = -12 + A \text{ or } A = 4$$

$$i = Cdv/dt, \text{ or } i/C = dv/dt = [-3(A\cos 4t + B\sin 4t)e^{-3t}] + [4(-A\sin 4t + B\cos 4t)e^{-3t}]$$

$$i(0) = -3A + 4B \text{ or } B = 3$$

$$v(t) = \mathbf{\{-12 + [(4\cos 4t + 3\sin 4t)e^{-3t}]\}\ A}$$

www.konkur.in

Chapter 8, Solution 43.

For t>0, we have a source-free series RLC circuit.

$$\alpha = \frac{R}{2L} \longrightarrow R = 2\alpha L = 2x8x0.5 = \mathbf{8\Omega}$$

$$\omega_d = \sqrt{\omega_o{}^2 - \alpha^2} = 30 \longrightarrow \omega_o = \sqrt{900 + 64} = \sqrt{964}$$

$$\boldsymbol{\omega_o = \frac{1}{\sqrt{LC}} \longrightarrow C = \frac{1}{\omega_o^2 L} = \frac{1}{964x0.5} = 2.075 \text{ mF}}$$

www.konkur.in

Chapter 8, Solution 44.

$$\alpha = \frac{R}{2L} = \frac{1000}{2x1} = 500, \qquad \omega_o = \frac{1}{\sqrt{LC}} = \frac{1}{\sqrt{100x10^{-9}}} = 10^4$$

$\omega_o > \alpha \quad \longrightarrow \quad$ **underdamped.**

www.konkur.in

Chapter 8, Solution 45.

$$\omega_o = 1/\sqrt{LC} = 1/\sqrt{1x0.5} = \sqrt{2}$$

$$\alpha = 1/(2RC) = (1)/(2x2x0.5) = 0.5$$

Since $\alpha < \omega_o$, we have an underdamped response.

$$s_{1,2} = -\alpha \pm \sqrt{\omega_o^2 - \alpha^2} = -0.5 \pm j1.3229$$

Thus, $i(t) = I_s + [(A\cos 1.3229t + B\sin 1.3229t)e^{-0.5t}], \quad I_s = 4$

$$i(0) = 1 = 4 + A \text{ or } A = -3$$

$$v = v_C = v_L = Ldi(0)/dt = 0$$

$$di/dt = [1.3229(-A\sin 1.3229t + B\cos 1.3229t)e^{-0.5t}] + [-0.5(A\cos 1.3229t + B\sin 1.3229t)e^{-0.5t}]$$

$$di(0)/dt = 0 = 1.3229B - 0.5A \text{ or } B = 0.5(-3)/1.3229 = -1.1339$$

Thus, $i(t) = \mathbf{\{4 - [(3\cos 1.3229t + 1.1339\sin 1.3229t)e^{-t/2}]\}\ A}$

To find v(t) we use $v(t) = v_L(t) = Ldi(t)/dt$.

From above,

$$di/dt = [1.3229(-A\sin 1.3229t + B\cos 1.3229t)e^{-0.5t}] + [-0.5(A\cos 1.323t + B\sin 1.323t)e^{-0.5t}]$$

Thus,

$$v(t) = Ldi/dt = [1.323(-A\sin 1.323t + B\cos 1.323t)e^{-0.5t}] + [-0.5(A\cos 1.323t + B\sin 1.323t)e^{-0.5t}]$$
$$= [1.3229(3\sin 1.3229t - 1.1339\cos 1.3229t)e^{-0.5t}] + [(1.5\cos 1.3229t + 0.5670\sin 1.3229t)e^{-0.5t}]$$

$$v(t) = [(-0\cos 1.323t + 4.536\sin 1.323t)e^{-0.5t}]\ V$$
$$= \mathbf{[(4.536\sin 1.3229t)e^{-t/2}]\ V}$$

Please note that the term in front of the cos calculates out to $-3.631x10^{-5}$ which is zero for all practical purposes when considering the rounding errors of the terms used to calculate it.

www.konkur.in

Chapter 8, Solution 46.

Using Fig. 8.93, design a problem to help other students to better understand the step response of a parallel *RLC* circuit.

Although there are many ways to work this problem, this is an example based on the same kind of problem asked in the third edition.

Problem

Find $i(t)$ for $t > 0$ in the circuit in Fig. 8.93.

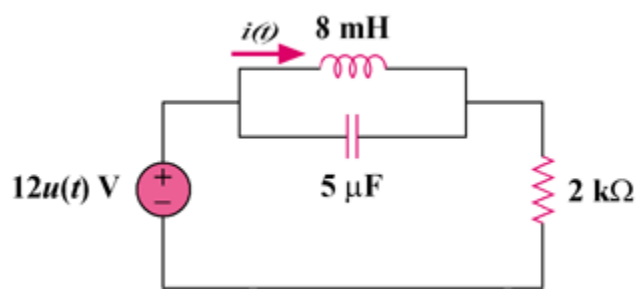

Figure 8.93

Solution

For t = 0-, u(t) = 0, so that v(0) = 0 and i(0) = 0.

For t > 0, we have a parallel RLC circuit with a step input, as shown below.

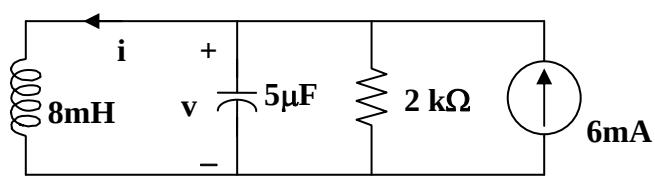

$$\alpha = 1/(2RC) = (1)/(2x2x10^3 \text{ x}5x10^{-6}) = 50$$

$$\omega_o = 1/\sqrt{LC} = 1/\sqrt{8x10^{-3}x5x10^{-6}} = 5{,}000$$

Since $\alpha < \omega_o$, we have an underdamped response.

$$s_{1,2} = -\alpha \pm \sqrt{\alpha^2 - \omega_o^2} \cong -50 \pm j5{,}000$$

Thus, $$i(t) = I_s + [(A\cos 5{,}000t + B\sin 5{,}000t)e^{-50t}], \quad I_s = 6\text{mA}$$

$$i(0) = 0 = 6 + A \text{ or } A = -6\text{mA}$$

www.konkur.in

$$v(0) = 0 = L\,di(0)/dt$$

$$di/dt = [5{,}000(-A\sin 5{,}000t + B\cos 5{,}000t)e^{-50t}] + [-50(A\cos 5{,}000t + B\sin 5{,}000t)e^{-50t}]$$

$$di(0)/dt = 0 = 5{,}000B - 50A \text{ or } B = 0.01(-6) = -0.06\text{mA}$$

Thus, $$i(t) = \mathbf{\{6 - [(6\cos 5{,}000t + 0.06\sin 5{,}000t)e^{-50t}]\}\ mA}$$

www.konkur.in

Chapter 8, Solution 47.

At $t = 0-$, we obtain, $i_L(0) = 3x5/(10 + 5) = 1A$

and $v_o(0) = 0$.

For $t > 0$, the 10-ohm resistor is short-circuited and we have a parallel RLC circuit with a step input.

$$\alpha = 1/(2RC) = (1)/(2x5x0.01) = 10$$

$$\omega_o = 1/\sqrt{LC} = 1/\sqrt{1x0.01} = 10$$

Since $\alpha = \omega_o$, we have a critically damped response.

$$s_{1,2} = -10$$

Thus, $i(t) = I_s + [(A + Bt)e^{-10t}]$, $I_s = 3$

$$i(0) = 1 = 3 + A \text{ or } A = -2$$

$$v_o = Ldi/dt = [Be^{-10t}] + [-10(A + Bt)e^{-10t}]$$

$$v_o(0) = 0 = B - 10A \text{ or } B = -20$$

Thus, $v_o(t) = \mathbf{(200te^{-10t})\ V}$

www.konkur.in

Chapter 8, Solution 48.

For $t = 0^-$, we obtain $i(0) = -6/(1 + 2) = -2$ and $v(0) = 2x1 = 2$.

For $t > 0$, the voltage is short-circuited and we have a source-free parallel RLC circuit.

$$\alpha = 1/(2RC) = (1)/(2x1x0.25) = 2$$

$$\omega_o = 1/\sqrt{LC} = 1/\sqrt{1x0.25} = 2$$

Since $\alpha = \omega_o$, we have a critically damped response.

$$s_{1,2} = -2$$

Thus, $$i(t) = [(A + Bt)e^{-2t}], \quad i(0) = -2 = A$$

$$v = Ldi/dt = [Be^{-2t}] + [-2(-2 + Bt)e^{-2t}]$$

$$v_o(0) = 2 = B + 4 \text{ or } B = -2$$

Thus,

$$i(t) = \mathbf{[(-2 - 2t)e^{-2t}]\ A}$$

$$\text{and } v(t) = \mathbf{[(2 + 4t)e^{-2t}]\ V}$$

www.konkur.in

Chapter 8, Solution 49.

For $t = 0^-$, $i(0) = 3 + 12/4 = 6$ and $v(0) = 0$.

For $t > 0$, we have a parallel *RLC* circuit with a step input.

$$\alpha = 1/(2RC) = (1)/(2x5x0.05) = 2$$

$$\omega_o = 1/\sqrt{LC} = 1/\sqrt{5x0.05} = 2$$

Since $\alpha = \omega_o$, we have a critically damped response.

$$s_{1,2} = -2$$

Thus, $$i(t) = I_s + [(A + Bt)e^{-2t}], \quad I_s = 3$$

$$i(0) = 6 = 3 + A \text{ or } A = 3$$

$$v = Ldi/dt \text{ or } v/L = di/dt = [Be^{-2t}] + [-2(A + Bt)e^{-2t}]$$

$$v(0)/L = 0 = di(0)/dt = B - 2x3 \text{ or } B = 6$$

Thus, $i(t) = \mathbf{\{3 + [(3 + 6t)e^{-2t}]\}\ A}$

www.konkur.in

Chapter 8, Solution 50.

For $t = 0-$, $4u(t) = 0$, $v(0) = 0$, and $i(0) = 30/10 = 3A$.

For $t > 0$, we have a parallel RLC circuit.

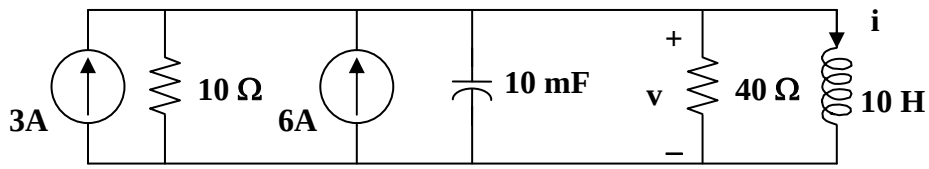

$$I_s = 3 + 6 = 9A \text{ and } R = 10||40 = 8 \text{ ohms}$$

$$\alpha = 1/(2RC) = (1)/(2x8x0.01) = 25/4 = 6.25$$

$$\omega_o = 1/\sqrt{LC} = 1/\sqrt{4x0.01} = 5$$

Since $\alpha > \omega_o$, we have a overdamped response.

$$s_{1,2} = -\alpha \pm \sqrt{\alpha^2 - \omega_o^2} = -10, -2.5$$

Thus, $$i(t) = I_s + [Ae^{-10t}] + [Be^{-2.5t}], \quad I_s = 9$$

$$i(0) = 3 = 9 + A + B \text{ or } A + B = -6$$

$$di/dt = [-10Ae^{-10t}] + [-2.5Be^{-2.5t}],$$

$$v(0) = 0 = Ldi(0)/dt \text{ or } di(0)/dt = 0 = -10A - 2.5B \text{ or } B = -4A$$

Thus, $A = 2$ and $B = -8$

Clearly, $$i(t) = \mathbf{\{ 9 + [2e^{-10t}] + [-8e^{-2.5t}]\} A}$$

www.konkur.in

Chapter 8, Solution 51.

Let i = inductor current and v = capacitor voltage.

At $t = 0$, $v(0) = 0$ and $i(0) = i_o$.

For $t > 0$, we have a parallel, source-free LC circuit ($R = \infty$).

$$\alpha = 1/(2RC) = 0 \text{ and } \omega_o = 1/\sqrt{LC} \text{ which leads to } s_{1,2} = \pm j\omega_o$$

$$v = A\cos\omega_o t + B\sin\omega_o t, \quad v(0) = 0 \text{ A}$$

$$i_C = C\,dv/dt = -i$$

$$dv/dt = \omega_o B\sin\omega_o t = -i/C$$

$$dv(0)/dt = \omega_o B = -i_o/C \text{ therefore } B = i_o/(\omega_o C)$$

$$v(t) = \mathbf{-(i_o/(\omega_o C))\sin\omega_o t \text{ V where } \omega_o = 1/\sqrt{LC}}$$

www.konkur.in

Chapter 8, Solution 52.

$$\alpha = 300 = \frac{1}{2RC} \qquad (1)$$

$$\omega_d = \sqrt{\omega_o{}^2 - \alpha^2} = 400 \quad \longrightarrow \quad \omega_o^2 = \omega_d^2 + \alpha^2 = 160{,}000 + 90{,}000 = \frac{1}{LC} \qquad (2)$$

From (2),

$$C = \frac{1}{250{,}000x50x10^{-3}} = \mathbf{80\ \mu F}$$

From (1),

$$R = \frac{1}{2\alpha C} = \frac{1}{2x300x80x10^{-6}} = \mathbf{20.83\Omega}.$$

www.konkur.in

Chapter 8, Solution 53.

At t<0, $i(0^-) = 0, v_c(0^-) = 120V$

For t >0, we have the circuit as shown below.

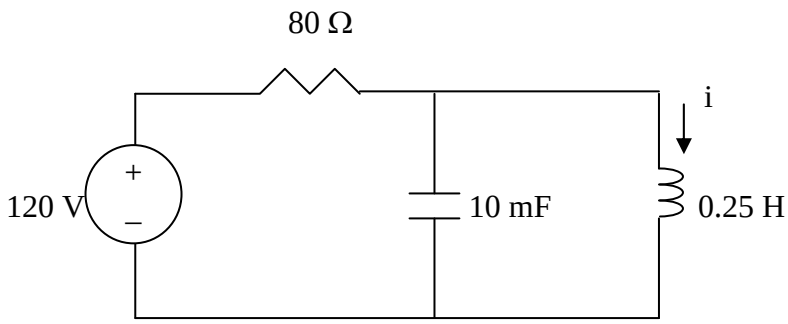

$$\frac{120 - V}{R} = C\frac{dv}{dt} + i \quad \longrightarrow \quad 120 = V + RC\frac{dv}{dt} + iR \qquad (1)$$

But $$v_L = v = L\frac{di}{dt} \qquad (2)$$

Substituting (2) into (1) yields

$$120 = L\frac{di}{dt} + RCL\frac{d^2i}{dt^2} + iR \quad \longrightarrow \quad 120 = \frac{1}{4}\frac{di}{dt} + 80x\frac{1}{4}x10x10^{-3}\frac{d^2i}{dt^2} + 80i$$

or

$$\mathbf{(d^2i/dt^2) + 0.125(di/dt) + 400i = 600}$$

www.konkur.in

Chapter 8, Solution 54.

Using Fig. 8.100, design a problem to help other students better understand general second-order circuits.

Although there are many ways to work this problem, this is an example based on the same kind of problem asked in the third edition.

Problem

For the circuit in Fig. 8.100, let $I = 9$A, $R_1 = 40\ \Omega$, $R_2 = 20\ \Omega$, $C = 10$ mF, $R_3 = 50\ \Omega$,and $L = 20$ mH. Determine: (a) $i(0^+)$ and $v(0^+)$, (b) $di(0^+)/dt$ and $dv(0^+)/dt$, (c) $i(\infty)$ and $v(\infty)$.

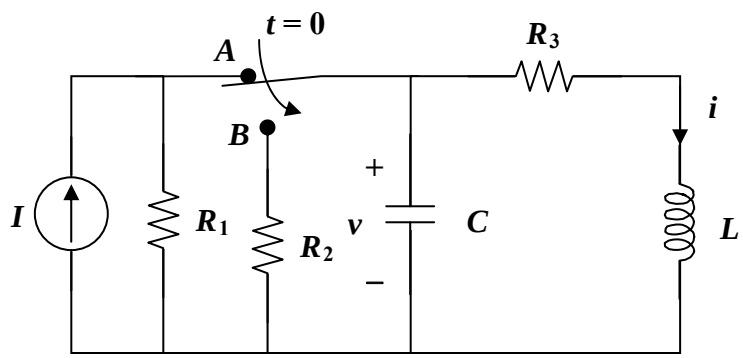

Figure 8.100
For Prob. 8.54.

Solution

(a) When the switch is at A, the circuit has reached steady state. Under this condition, the circuit is as shown below.

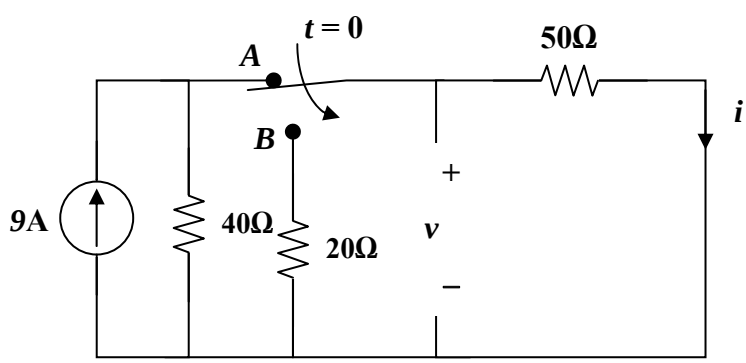

(a) When the switch is at A, $i(0^-) = 9[(40x50)/(40+50)]/50 = 4$ A and $v(0^-) = 50i(0^-) = 200$ V. Since the current flowing through the inductor cannot change in zero time, $i(0^+) = i(0^-) =$ **4 A**. Since the voltage across the capacitor cannot change in zero time, $v(0^-) = v(0^-) =$ **200 V**.

www.konkur.in

(b) For the inductor, $v_L = L(di/dt)$ or $di(0^+)/dt = v_L(0^+)/0.02$.

At $t = 0^+$, the right hand loop becomes,

$$-200 + 50x4 + v_L(0^+) = 0 \text{ or } v_L(0^+) = 0 \text{ and } (di(0^+)/dt) = \underline{\mathbf{0}}.$$

For the capacitor, $i_C = C(dv/dt)$ or $dv(0^+)/dt = i_C(0^+)/0.01$.

At $t = 0^+$, and looking at the current flowing out of the node at the top of the circuit,

$$((200–0)/20) + i_C + 4 = 0 \text{ or } i_C = –14 \text{ A}.$$

Therefore,

$$dv(0^+)/dt = –14/0.01 = \mathbf{–1.4\ kV/s.}$$

(c) When the switch is in position B, the circuit reaches steady state. Since it is source-free, i and v decay to zero with time.

Thus,

$$i(\infty) = \mathbf{0\ A} \text{ and } v(\infty) = \mathbf{0\ V}.$$

www.konkur.in

Chapter 8, Solution 55.

At the top node, writing a KCL equation produces,

$$i/4 + i = C_1 dv/dt, \quad C_1 = 0.1$$

$$5i/4 = C_1 dv/dt = 0.1 dv/dt$$

$$i = 0.08 dv/dt \qquad (1)$$

But, $$v = -(2i + (1/C_2)\int i dt), \quad C_2 = 0.5$$

$$\text{or} \qquad -dv/dt = 2di/dt + 2i \qquad (2)$$

Substituting (1) into (2) gives,

$$-dv/dt = 0.16 d^2v/dt^2 + 0.16 dv/dt$$

$$0.16 d^2v/dt^2 + 0.16 dv/dt + dv/dt = 0, \text{ or } d^2v/dt^2 + 7.25 dv/dt = 0$$

Which leads to $s^2 + 7.25s = 0 = s(s + 7.25)$ or $s_{1,2} = 0, -7.25$

$$v(t) = A + Be^{-7.25t} \qquad (3)$$

$$v(0) = 4 = A + B \qquad (4)$$

From (1), $i(0) = 2 = 0.08 dv(0+)/dt$ or $dv(0+)/dt = 25$

But, $dv/dt = -7.25Be^{-7.25t}$, which leads to,

$$dv(0)/dt = -7.25B = 25 \text{ or } B = -3.448 \text{ and } A = 4 - B = 4 + 3.448 = 7.448$$

Thus, $v(t) = \mathbf{\{7.448 - 3.448e^{-7.25t}\}\ V}$

www.konkur.in

Chapter 8, Solution 56.

For $t < 0$, $i(0) = 0$ and $v(0) = 0$.

For $t > 0$, the circuit is as shown below.

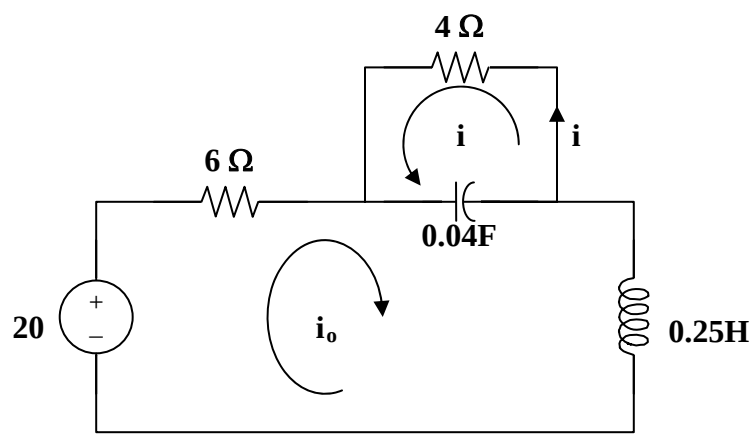

Applying KVL to the larger loop,

$$-20 + 6i_o + 0.25di_o/dt + 25\int(i_o + i)dt = 0$$

Taking the derivative,

$$6di_o/dt + 0.25d^2i_o/dt^2 + 25(i_o + i) = 0 \qquad (1)$$

For the smaller loop, $4 + 25\int(i + i_o)dt = 0$

Taking the derivative, $25(i + i_o) = 0$ or $i = -i_o$ (2)

From (1) and (2) $6di_o/dt + 0.25d^2i_o/dt^2 = 0$

This leads to, $0.25s^2 + 6s = 0$ or $s_{1,2} = 0, -24$

$$i_o(t) = (A + Be^{-24t}) \text{ and } i_o(0) = 0 = A + B \text{ or } B = -A$$

As t approaches infinity, $i_o(\infty) = 20/10 = 2 = A$, therefore $B = -2$

Thus, $i_o(t) = (2 - 2e^{-24t}) = -i(t)$ or

$$i(t) = \mathbf{(-2 + 2e^{-24t})\ A}$$

www.konkur.in

Chapter 8, Solution 57.

(a) Let v = capacitor voltage and i = inductor current. At t = 0-, the switch is closed and the circuit has reached steady-state.

$$v(0-) = 16V \text{ and } i(0-) = 16/8 = 2A$$

At t = 0+, the switch is open but, v(0+) = 16 and i(0+) = 2.

We now have a source-free RLC circuit.

$$R\ 8 + 12 = 20 \text{ ohms},\ L = 1H,\ C = 4mF.$$

$$\alpha = R/(2L) = (20)/(2x1) = 10$$

$$\omega_o = 1/\sqrt{LC} = 1/\sqrt{1x(1/36)} = 6$$

Since $\alpha > \omega_o$, we have a overdamped response.

$$s_{1,2} = -\alpha \pm \sqrt{\alpha^2 - \omega_o^2} = -18, -2$$

Thus, the characteristic equation is (s + 2)(s + 18) = 0 or $\mathbf{s^2 + 20s + 36 = 0}$.

(b) $$i(t) = [Ae^{-2t} + Be^{-18t}] \text{ and } i(0) = 2 = A + B \qquad (1)$$

To get di(0)/dt, consider the circuit below at t = 0+.

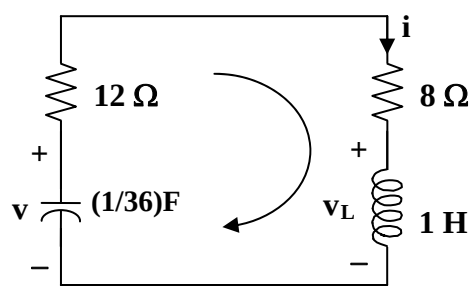

$$-v(0) + 20i(0) + v_L(0) = 0, \text{ which leads to,}$$

$$-16 + 20x2 + v_L(0) = 0 \text{ or } v_L(0) = -24$$

$$Ldi(0)/dt = v_L(0) \text{ which gives } di(0)/dt = v_L(0)/L = -24/1 = -24 \text{ A/s}$$

$$\text{Hence } -24 = -2A - 18B \text{ or } 12 = A + 9B \qquad (2)$$

From (1) and (2), B = 1.25 and A = 0.75

www.konkur.in

$$i(t) = [0.75e^{-2t} + 1.25e^{-18t}] = -i_x(t) \text{ or } i_x(t) = \mathbf{[-0.75e^{-2t} - 1.25e^{-18t}]\ A}$$

$$v(t) = 8i(t) = \mathbf{[6e^{-2t} + 10e^{-18t}]\ A}$$

www.konkur.in

Chapter 8, Solution 58.

(a) Let i =inductor current, v = capacitor voltage i(0) =0, v(0) = 4

$$\frac{dv(0)}{dt} = -\frac{[v(0) + Ri(0)]}{RC} = -\frac{(4+0)}{0.5} = \underline{-8 \text{ V/s}}$$

(b) For $t \geq 0$, the circuit is a source-free RLC parallel circuit.

$$\alpha = \frac{1}{2RC} = \frac{1}{2x0.5x1} = 1, \qquad \omega_o = \frac{1}{\sqrt{LC}} = \frac{1}{\sqrt{0.25x1}} = 2$$

$$\omega_d = \sqrt{\omega^2{}_o - \alpha^2} = \sqrt{4-1} = 1.732$$

Thus,

$$v(t) = e^{-t}(A_1 \cos 1.732t + A_2 \sin 1.732t)$$

v(0) = 4 = A_1

$$\frac{dv}{dt} = -e^{-t}A_1 \cos 1.732t - 1.732e^{-t}A_1 \sin 1.732t - e^{-t}A_2 \sin 1.732t + 1.732e^{-t}A_2 \cos 1.732t$$

$$\frac{dv(0)}{dt} = -8 = -A_1 + 1.732A_2 \qquad \longrightarrow \qquad A_2 = -2.309$$

$$\boldsymbol{v(t) = \underline{e^{-t}(4\cos 1.732t - 2.309\sin 1.732t)}\ \text{V}}$$

www.konkur.in

Chapter 8, Solution 59.

Let i = inductor current and v = capacitor voltage
v(0) = 0, i(0) = 40/(4+16) = 2A
For t>0, the circuit becomes a source-free series RLC with

$$\alpha = \frac{R}{2L} = \frac{16}{2x4} = 2, \qquad \omega_o = \frac{1}{\sqrt{LC}} = \frac{1}{\sqrt{4x1/16}} = 2, \qquad \longrightarrow \qquad \alpha = \omega_o = 2$$

$$i(t) = Ae^{-2t} + Bte^{-2t}$$

i(0) = 2 = A

$$\frac{di}{dt} = -2Ae^{-2t} + Be^{-2t} - 2Bte^{-2t}$$

$$\frac{\mathrm{di}(0)}{\mathrm{dt}} = -2\mathrm{A} + \mathrm{B} = -\frac{1}{\mathrm{L}}[\mathrm{Ri}(0) - \mathrm{v}(0)] \qquad \longrightarrow \qquad -2\mathrm{A} + \mathrm{B} = -\frac{1}{4}(32 - 0), \qquad \mathrm{B} = -4$$

$$i(t) = 2e^{-2t} - 4te^{-2t}$$

$$\mathrm{v} = \frac{1}{\mathrm{C}}\int_0^t -\mathrm{idt} + \mathrm{v}(0) = -32\int_0^t \mathrm{e}^{-2\mathrm{t}}\mathrm{dt} + 64\int_0^t \mathrm{te}^{-2\mathrm{t}}\mathrm{dt} = +16\mathrm{e}^{-2\mathrm{t}}\ \Big|_0^t + \frac{64}{4}\mathrm{e}^{-2\mathrm{t}}(-2\mathrm{t} - 1)\ \Big|_0^t$$

v = **–32te^{-2t} V**.

Checking,

$$\mathrm{v} = \mathrm{Ldi/dt} + \mathrm{Ri} = 4(-4\mathrm{e}^{-2\mathrm{t}} - 4\mathrm{e}^{-2\mathrm{t}} + 8\mathrm{e}^{-2\mathrm{t}}) + 16(2\mathrm{e}^{-2\mathrm{t}} - 4\mathrm{te}^{-2\mathrm{t}}) = -32\mathrm{te}^{-2\mathrm{t}}\ \mathrm{V}.$$

www.konkur.in

Chapter 8, Solution 60.

At $t = 0-$, $4u(t) = 0$ so that $i_1(0) = 0 = i_2(0)$ (1)

Applying nodal analysis,

$$4 = 0.5di_1/dt + i_1 + i_2$$
(2)

Also, $i_2 = [1di_1/dt - 1di_2/dt]/3$ or $3i_2 = di_1/dt - di_2/dt$ (3)

Taking the derivative of (2), $0 = d^2i_1/dt^2 + 2di_1/dt + 2di_2/dt$ (4)

From (2) and (3), $di_2/dt = di_1/dt - 3i_2 = di_1/dt - 3(4 - i_1 - 0.5di_1/dt)$

$$= di_1/dt - 12 + 3i_1 + 1.5di_1/dt$$

Substituting this into (4),

$d^2i_1/dt^2 + 7di_1/dt + 6i_1 = 24$ which gives $s^2 + 7s + 6 = 0 = (s + 1)(s + 6)$

Thus, $i_1(t) = I_s + [Ae^{-t} + Be^{-6t}]$, $6I_s = 24$ or $I_s = 4$

$i_1(t) = 4 + [Ae^{-t} + Be^{-6t}]$ and $i_1(0) = 4 + [A + B]$ (5)

$i_2 = 4 - i_1 - 0.5di_1/dt = i_1(t) = 4 + -4 - [Ae^{-t} + Be^{-6t}] - [-Ae^{-t} - 6Be^{-6t}]$

$= [-0.5Ae^{-t} + 2Be^{-6t}]$ and $i_2(0) = 0 = -0.5A + 2B$ (6)

From (5) and (6), $A = -3.2$ and $B = -0.8$

$$i_1(t) = \mathbf{\{4 + [-3.2e^{-t} - 0.8e^{-6t}]\}\ A}$$

$$i_2(t) = \mathbf{[1.6e^{-t} - 1.6e^{-6t}]\ A}$$

www.konkur.in

Chapter 8, Solution 61.

For $t > 0$, we obtain the natural response by considering the circuit below.

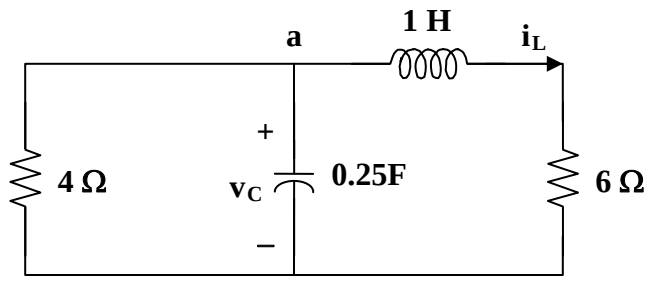

At node a, $v_C/4 + 0.25dv_C/dt + i_L = 0$ (1)

But, $v_C = 1di_L/dt + 6i_L$ (2)

Combining (1) and (2),

$$(1/4)di_L/dt + (6/4)i_L + 0.25d^2i_L/dt^2 + (6/4)di_L/dt + i_L = 0$$

$$d^2i_L/dt^2 + 7di_L/dt + 10i_L = 0$$

$$s^2 + 7s + 10 = 0 = (s + 2)(s + 5) \text{ or } s_{1,2} = -2, -5$$

$$\text{Thus, } i_L(t) = i_L(\infty) + [Ae^{-2t} + Be^{-5t}],$$

where $i_L(\infty)$ represents the final inductor current $= 4(4)/(4 + 6) = 1.6$

$i_L(t) = 1.6 + [Ae^{-2t} + Be^{-5t}]$ and $i_L(0) = 1.6 + [A+B]$ or $-1.6 = A+B$ (3)

$$di_L/dt = [-2Ae^{-2t} - 5Be^{-5t}]$$

and $di_L(0)/dt = 0 = -2A - 5B$ or $A = -2.5B$ (4)

From (3) and (4), $A = -8/3$ and $B = 16/15$

$$i_L(t) = 1.6 + [-(8/3)e^{-2t} + (16/15)e^{-5t}]$$

$$v(t) = 6i_L(t) = \mathbf{\{9.6 + [-16e^{-2t} + 6.4e^{-5t}]\}\ V}$$

$$v_C = 1di_L/dt + 6i_L = [(16/3)e^{-2t} - (16/3)e^{-5t}] + \{9.6 + [-16e^{-2t} + 6.4e^{-5t}]\}$$

$$v_C = \{9.6 + [-(32/3)e^{-2t} + 1.0667e^{-5t}]\}$$

$$i(t) = v_C/4 = \mathbf{\{2.4 + [-2.667e^{-2t} + 0.2667e^{-5t}]\}\ A}$$

www.konkur.in

Chapter 8, Solution 62.

This is a parallel RLC circuit as evident when the voltage source is turned off.

$$\alpha = 1/(2RC) = (1)/(2x3x(1/18)) = 3$$

$$\omega_o = 1/\sqrt{LC} = 1/\sqrt{2x1/18} = 3$$

Since $\alpha = \omega_o$, we have a critically damped response.

$$s_{1,2} = -3$$

Let v(t) = capacitor voltage

Thus, $v(t) = V_s + [(A + Bt)e^{-3t}]$ where $V_s = 0$

But $-10 + v_R + v = 0$ or $v_R = 10 - v$

Therefore v_R = $\mathbf{10 - [(A + Bt)e^{-3t}]}$ where A and B are determined from initial conditions.

www.konkur.in

Chapter 8, Solution 63.

$$\frac{v_s - 0}{R} = C\frac{d(0 - v_o)}{dt} \longrightarrow \frac{v_s}{R} = -C\frac{dv_o}{dt}$$

$$v_o = L\frac{di}{dt} \longrightarrow \frac{dv_o}{dt} = L\frac{d^2 i}{dt^2} = -\frac{v_s}{RC}$$

Thus,

$$\boldsymbol{\frac{d^2 i(t)}{dt^2} = -\frac{v_s}{RCL}}$$

www.konkur.in

Chapter 8, Solution 64.

Using Fig. 8.109, design a problem to help other students to better understand second-order op amp circuits.

Although there are many ways to work this problem, this is an example based on the same kind of problem asked in the third edition.

Problem

Obtain the differential equation for $v_o(t)$ in the network of Fig. 8.109.

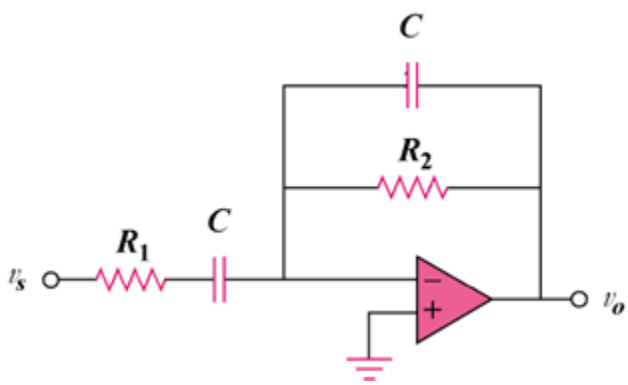

Figure 8.109

Solution

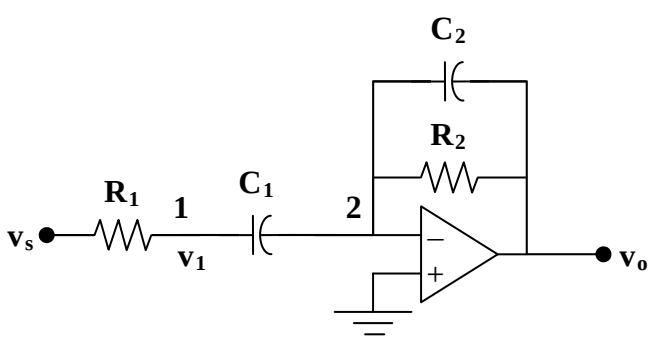

At node 1, $(v_s - v_1)/R_1 = C_1\, d(v_1 - 0)/dt$ or $v_s = v_1 + R_1C_1dv_1/dt$ (1)

At node 2, $C_1dv_1/dt = (0 - v_o)/R_2 + C_2d(0 - v_o)/dt$

or $-R_2C_1dv_1/dt = v_o + R_2C_2dv_o/dt$ (2)

From (1) and (2), $(v_s - v_1)/R_1 = C_1\, dv_1/dt = -(1/R_2)(v_o + R_2C_2dv_o/dt)$

or $v_1 = v_s + (R_1/R_2)(v_o + R_2C_2dv_o/dt)$ (3)

www.konkur.in

Substituting (3) into (1) produces,

$$v_s = v_s + (R_1/R_2)(v_o + R_2C_2dv_o/dt) + R_1C_1d\{v_s + (R_1/R_2)(v_o + R_2C_2dv_o/dt)\}/dt$$

$$= v_s + (R_1/R_2)(v_o) + (R_1C_2)dv_o/dt + R_1C_1dv_s/dt + (R_1R_1C_1/R_2)dv_o/dt + ((R_1)^2\, C_1C_2)[d^2v_o/dt^2]$$

$$((R_1)^2\, C_1C_2)[d^2v_o/dt^2] + [(R_1C_2) + (R_1R_1C_1/R_2)]dv_o/dt + (R_1/R_2)(v_o) = -R_1C_1dv_s/dt$$

Simplifying we get,

$$[d^2v_o/dt^2] + \{[(R_1C_2) + (R_1R_1C_1/R_2)]/((R_1)^2\, C_1C_2)\}dv_o/dt + \{(R_1/R_2)(v_o)/\, ((R_1)^2\, C_1C_2)\} = -\{R_1C_1\, /((R_1)^2\, C_1C_2)\}dv_s/dt$$

$$\mathbf{d^2v_o/dt^2 + [(1/\, R_1C_1) + (1/(R_2C_2))]dv_o/dt + [1/(R_1R_2C_1C_2)](v_o) = -[1/(R_1C_2)]dv_s/dt}$$

Another way to successfully work this problem is to give actual values of the resistors and capacitors and determine the actual differential equation. Alternatively, one could give a differential equations and ask the other students to choose actual value of the differential equation.

www.konkur.in

Chapter 8, Solution 65.

At the input of the first op amp,

$$(v_o - 0)/R = Cd(v_1 - 0) \qquad (1)$$

At the input of the second op amp,

$$(-v_1 - 0)/R = Cdv_2/dt \qquad (2)$$

Let us now examine our constraints. Since the input terminals are essentially at ground, then we have the following,

$$v_o = -v_2 \text{ or } v_2 = -v_o \qquad (3)$$

Combining (1), (2), and (3), eliminating v_1 and v_2 we get,

$$\frac{d^2v_o}{dt^2} - \left(\frac{1}{R^2C^2}\right)v_o = \frac{d^2v_o}{dt^2} - 100v_o = 0$$

Which leads to $s^2 - 100 = 0$

Clearly this produces roots of –10 and +10.

And, we obtain,

$$v_o(t) = (Ae^{+10t} + Be^{-10t})V$$

At $t = 0$, $v_o(0+) = -v_2(0+) = 0 = A + B$, thus $B = -A$

This leads to $v_o(t) = (Ae^{+10t} - Ae^{-10t})V$. Now we can use $v_1(0+) = 2V$.

From (2), $v_1 = -RCdv_2/dt = 0.1dv_o/dt = 0.1(10Ae^{+10t} + 10Ae^{-10t})$

$$v_1(0+) = 2 = 0.1(20A) = 2A \text{ or } A = 1$$

Thus, $v_o(t) = \mathbf{(e^{+10t} - e^{-10t})\ V}$

It should be noted that this circuit is unstable (clearly one of the poles lies in the right-half-plane).

www.konkur.in

Chapter 8, Solution 66.

We apply nodal analysis to the circuit as shown below.

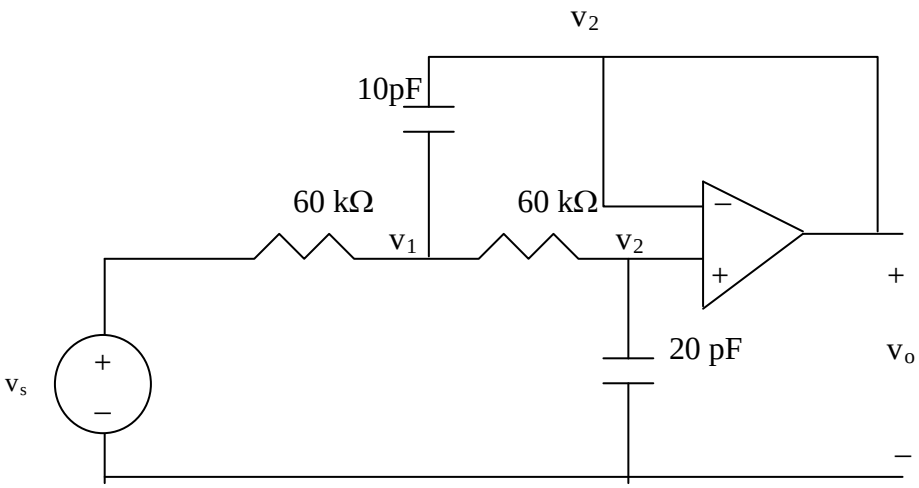

At node 1,

$$\frac{v_s - v_1}{60k} = \frac{v_1 - v_2}{60k} + 10pF\frac{d}{dt}(v_1 - v_o)$$

But $v_2 = v_o$

$$v_s = 2v_1 - v_o + 6x10^{-7}\frac{d(v_1 - v_o)}{dt} \qquad (1)$$

At node 2,

$$\frac{v_1 - v_2}{60k} = 20pF\frac{d}{dt}(v_2 - 0), \qquad v_2 = v_o$$

$$v_1 = v_o + 1.2x10^{-6}\frac{dv_o}{dt} \qquad (2)$$

Substituting (2) into (1) gives

$$v_s = 2\left(v_o + 1.2x10^{-6}\frac{dv_o}{dt}\right) - v_o + 6x10^{-7}\left(1.2x10^{-6}\frac{d^2v_o}{dt^2}\right)$$

$$v_s = \mathbf{v_o + 2.4x10^{-6}(dv_o/dt) + 7.2x10^{-13}(d^2v_o/dt^2)}.$$

www.konkur.in

Chapter 8, Solution 67.

At node 1,

$$\frac{v_{in} - v_1}{R_1} = C_1 \frac{d(v_1 - v_o)}{dt} + C_2 \frac{d(v_1 - 0)}{dt} \qquad (1)$$

At node 2,

$$C_2 \frac{d(v_1 - 0)}{dt} = \frac{0 - v_o}{R_2}, \text{ or } \frac{dv_1}{dt} = \frac{-v_o}{C_2 R_2} \qquad (2)$$

From (1) and (2),

$$v_{in} - v_1 = -\frac{R_1 C_1}{C_2 R_2}\frac{dv_o}{dt} - R_1 C_1 \frac{dv_o}{dt} - R_1 \frac{v_o}{R_2}$$

$$v_1 = v_{in} + \frac{R_1 C_1}{C_2 R_2}\frac{dv_o}{dt} + R_1 C_1 \frac{dv_o}{dt} + R_1 \frac{v_o}{R_2} \qquad (3)$$

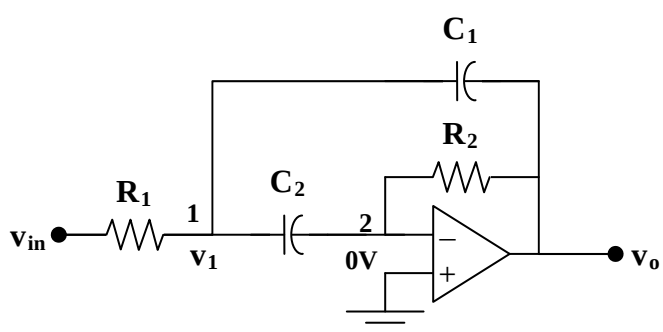

From (2) and (3),

$$-\frac{v_o}{C_2 R_2} = \frac{dv_1}{dt} = \frac{dv_{in}}{dt} + \frac{R_1 C_1}{C_2 R_2}\frac{dv_o}{dt} + R_1 C_1 \frac{d^2 v_o}{dt^2} + \frac{R_1}{R_2}\frac{dv_o}{dt}$$

$$\frac{d^2 v_o}{dt^2} + \frac{1}{R_2}\left(\frac{1}{C_1} + \frac{1}{C_2}\right)\frac{dv_o}{dt} + \frac{v_o}{C_1 C_2 R_2 R_1} = -\frac{1}{R_1 C_1}\frac{dv_{in}}{dt}$$

But $C_1 C_2 R_1 R_2 = 10^{-4} \text{x} 10^{-4} \text{x} 10^{4} \text{x} 10^{4} = 1$

$$\frac{1}{R_2}\left(\frac{1}{C_1} + \frac{1}{C_2}\right) = \frac{2}{R_2 C_1} = \frac{2}{10^4 \text{x} 10^{-4}} = 2$$

www.konkur.in

$$\frac{d^2v_o}{dt^2} + 2\frac{dv_o}{dt} + v_o = -\frac{dv_{in}}{dt}$$

Which leads to $s^2 + 2s + 1 = 0$ or $(s + 1)^2 = 0$ and $s = -1, -1$

Therefore, $v_o(t) = [(A + Bt)e^{-t}] + V_f$

As t approaches infinity, the capacitor acts like an open circuit so that

$$V_f = v_o(\infty) = 0$$

$v_{in} = 10u(t)$ mV and the fact that the initial voltages across each capacitor is 0

means that $v_o(0) = 0$ which leads to $A = 0$.

$$v_o(t) = [Bte^{-t}]$$

$$\frac{dv_o}{dt} = [(B - Bt)e^{-t}] \qquad (4)$$

From (2),

$$\frac{dv_o(0+)}{dt} = -\frac{v_o(0+)}{C_2R_2} = 0$$

From (1) at $t = 0+$,

$$\frac{1-0}{R_1} = -C_1\frac{dv_o(0+)}{dt} \quad \text{which leads to} \quad \frac{dv_o(0+)}{dt} = -\frac{1}{C_1R_1} = -1$$

Substituting this into (4) gives $B = -1$

Thus, $v(t) = \mathbf{-te^{-t}u(t)\ V}$

www.konkur.in

Chapter 8, Solution 68.

The schematic is as shown below. The unit step is modeled by VPWL as shown. We insert a voltage marker to display V after simulation. We set Print Step = 25 ms and final step = 6s in the transient box. The output plot is shown below.

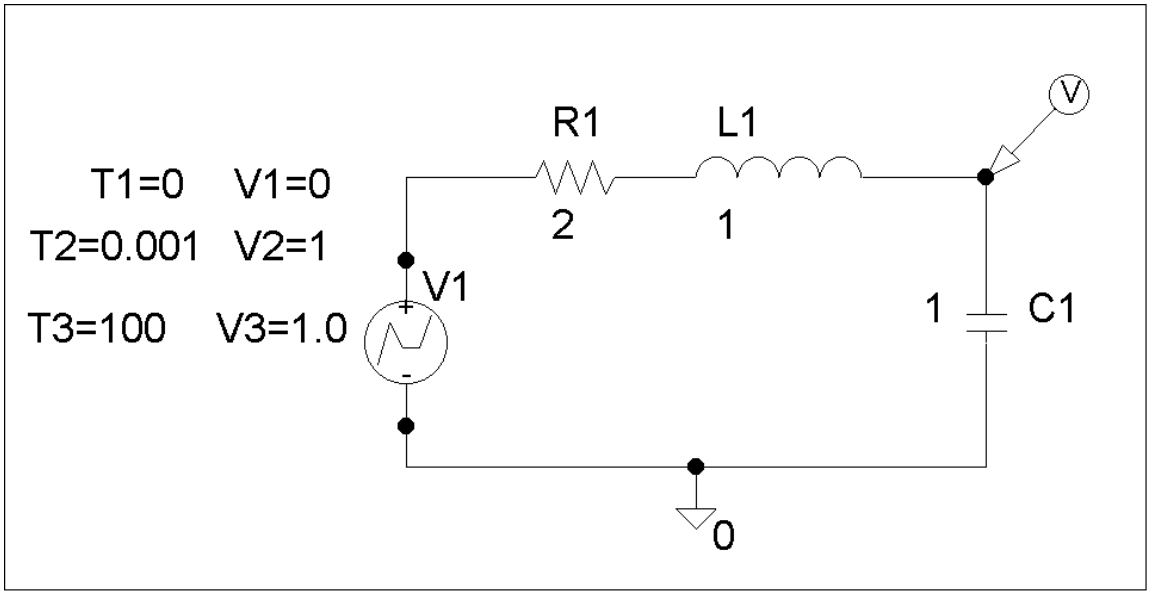

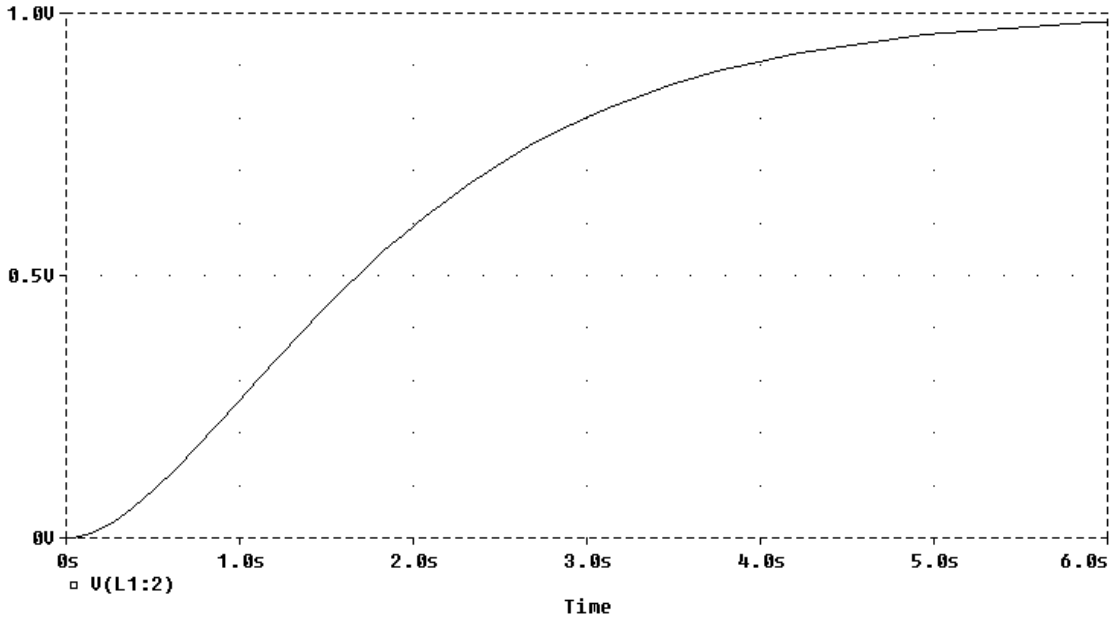

www.konkur.in

Chapter 8, Solution 69.

The schematic is shown below. The initial values are set as attributes of L1 and C1. We set Print Step to 25 ms and the Final Time to 20s in the transient box. A current marker is inserted at the terminal of L1 to automatically display i(t) after simulation. The result is shown below.

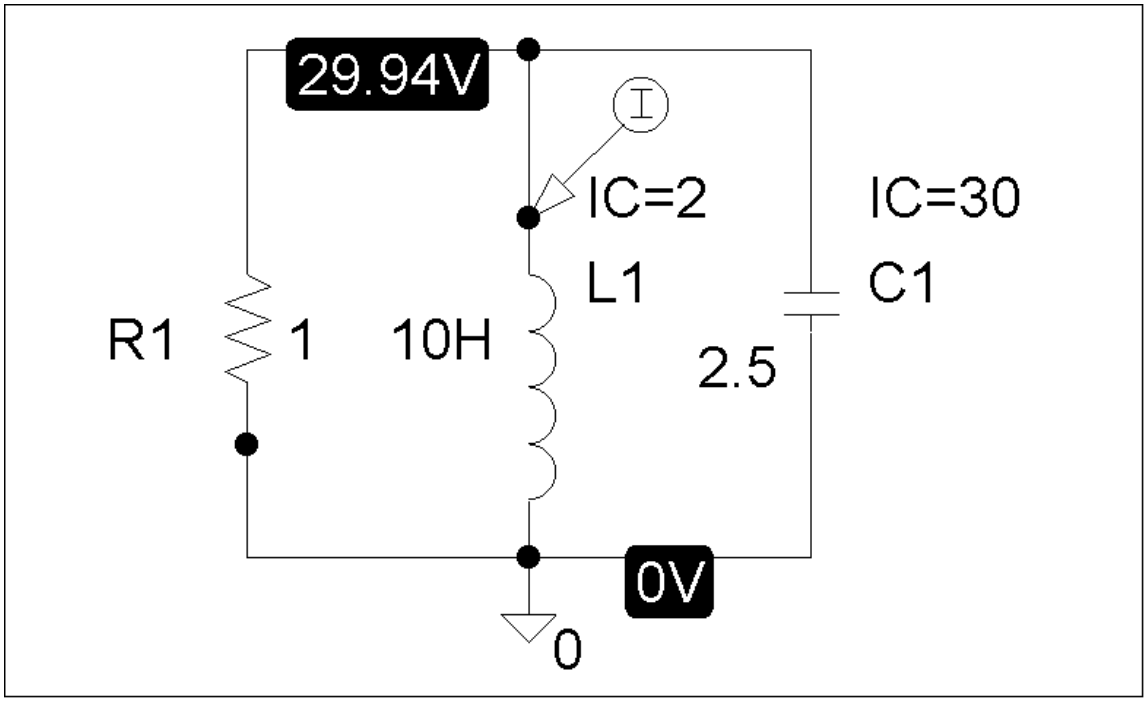

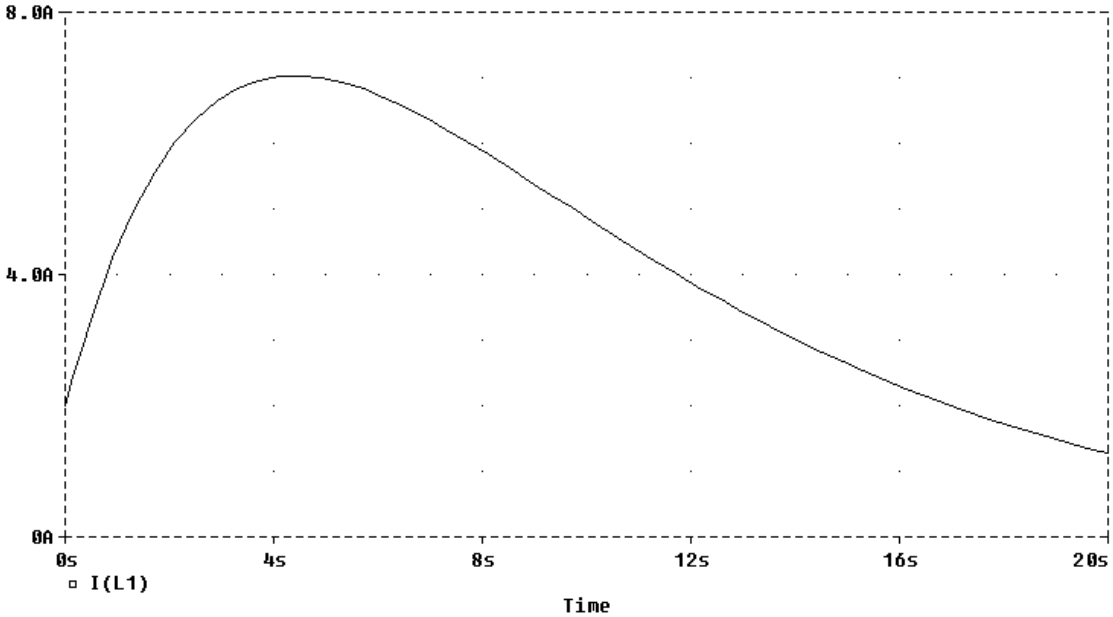

www.konkur.in

Chapter 8, Solution 70.

The schematic is shown below.

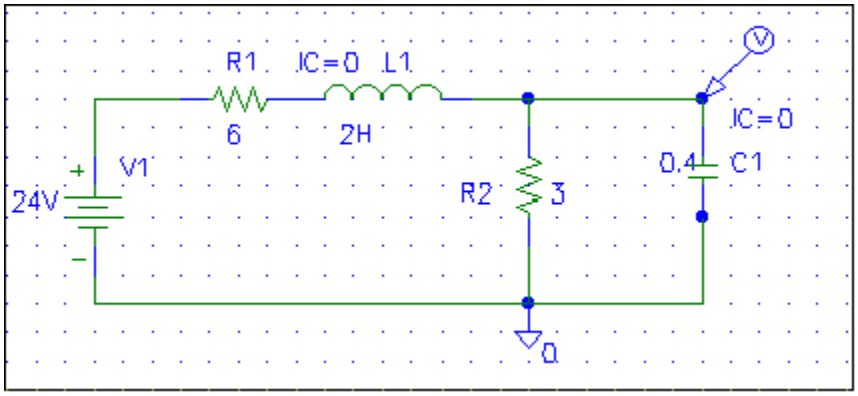

After the circuit is saved and simulated, we obtain the capacitor voltage v(t) as shown below.

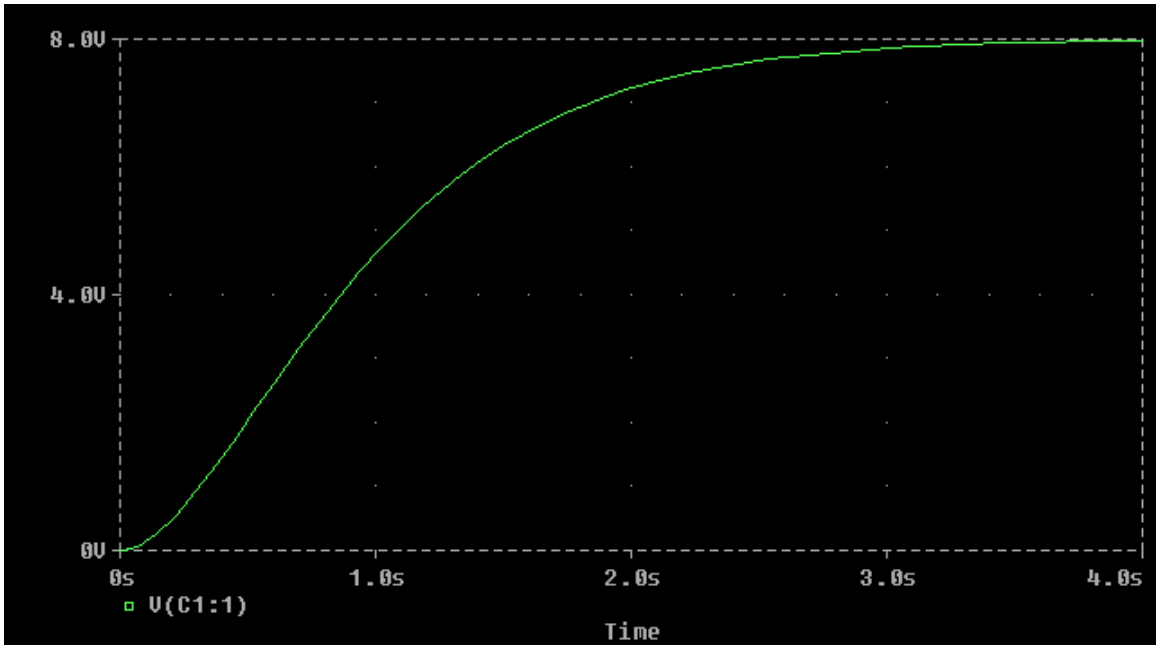

www.konkur.in

Chapter 8, Solution 71.

The schematic is shown below. We use VPWL and IPWL to model the 39 u(t) V and 13 u(t) A respectively. We set Print Step to 25 ms and Final Step to 4s in the Transient box. A voltage marker is inserted at the terminal of R2 to automatically produce the plot of v(t) after simulation. The result is shown below.

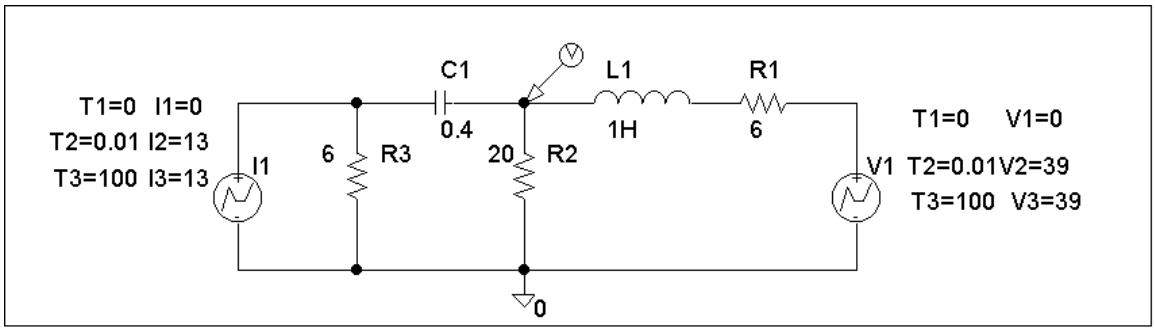

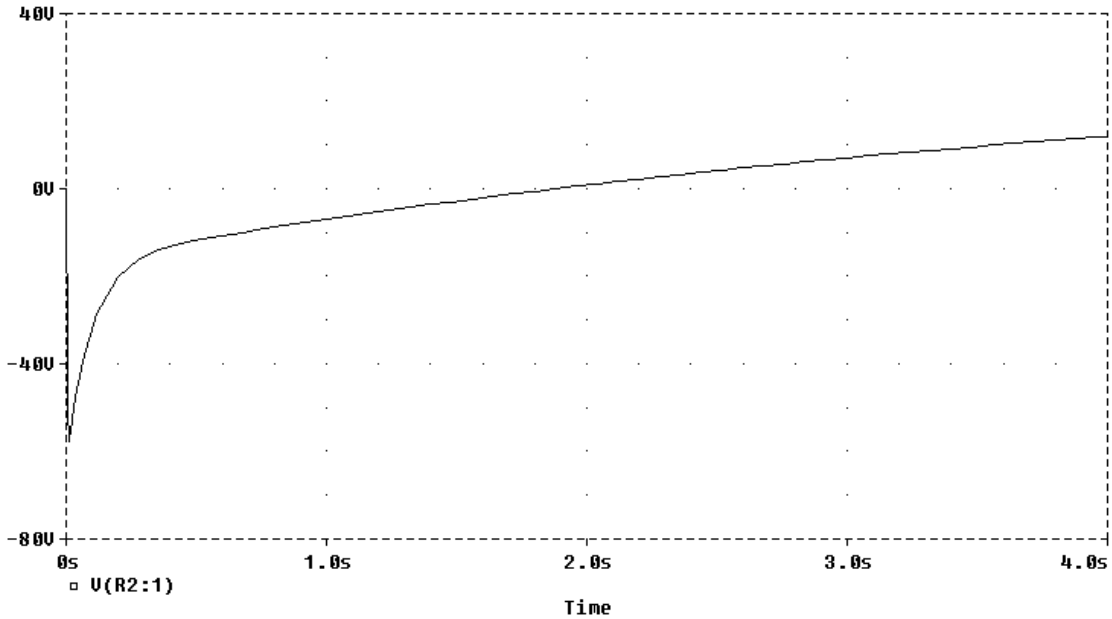

www.konkur.in

Chapter 8, Solution 72.

When the switch is in position 1, we obtain IC=10 for the capacitor and IC=0 for the inductor. When the switch is in position 2, the schematic of the circuit is shown below.

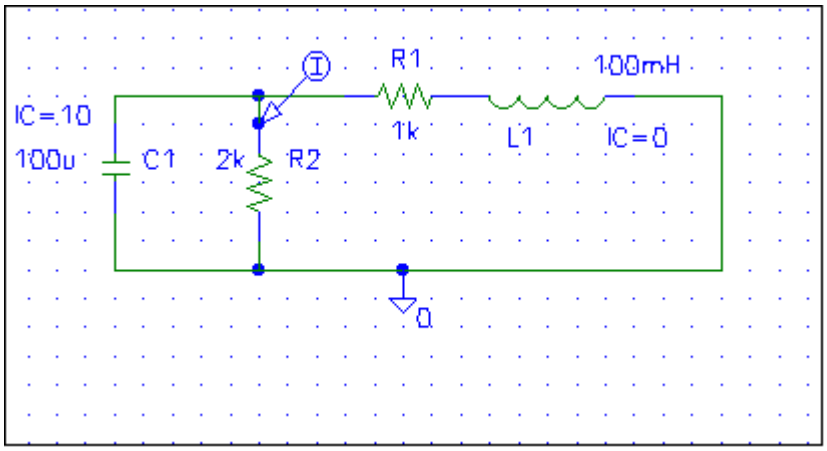

When the circuit is simulated, we obtain i(t) as shown below.

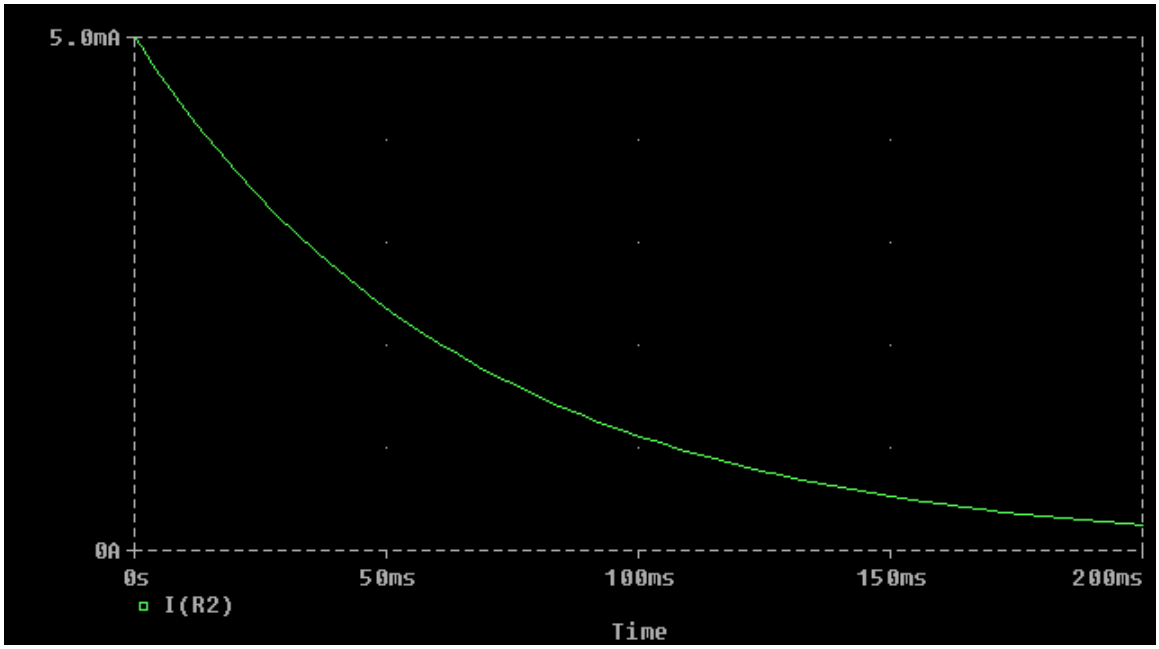

www.konkur.in

Chapter 8, Solution 73.

Design a problem, using PSpice, to help other students to better understand source-free *RLC* circuits.

Although there are many ways to work this problem, this is an example based on a somewhat similar problem worked in the third edition.

Problem

The step response of an *RLC* circuit is given by

$$\frac{d^2 i_L}{dt^2} + 0.5\frac{di_L}{dt} + 4i_L = 0$$

Given that $i_L(0) = 3$ A and $v_C(0) = 24$ V, solve for $v_C(t)$ and $I_C(t)$.

Solution

(a) For $t < 0$, we have the schematic below. When this is saved and simulated, we obtain the initial inductor current and capacitor voltage as

$$i_L(0) = 3 \text{ A} \quad \text{and } v_c(0) = 24 \text{ V}.$$

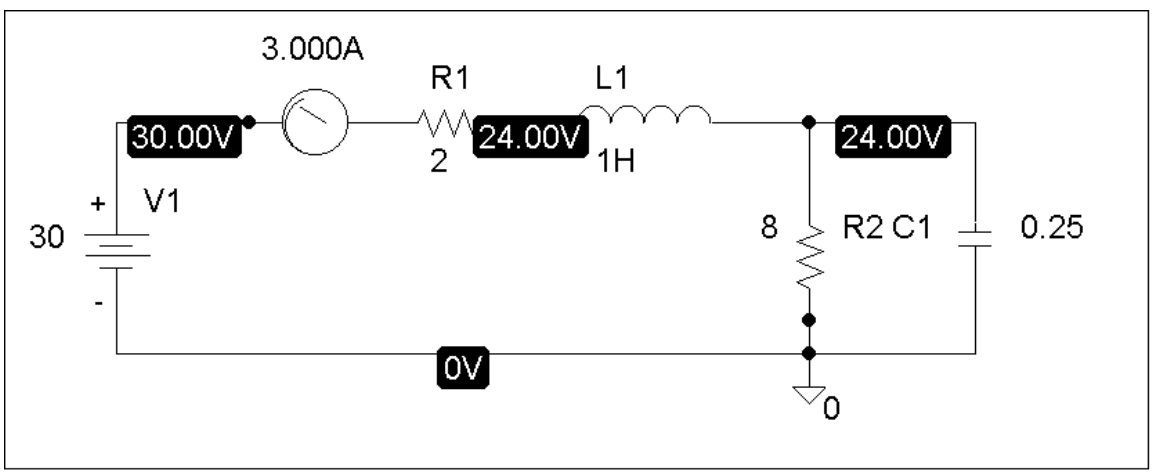

(b) For $t > 0$, we have the schematic shown below. To display i(t) and v(t), we insert current and voltage markers as shown. The initial inductor current and capacitor voltage are also

www.konkur.in

incorporated. In the Transient box, we set Print Step = 25 ms and the Final Time to 4s. After simulation, we automatically have $i_o(t)$ and $v_o(t)$ displayed as shown below.

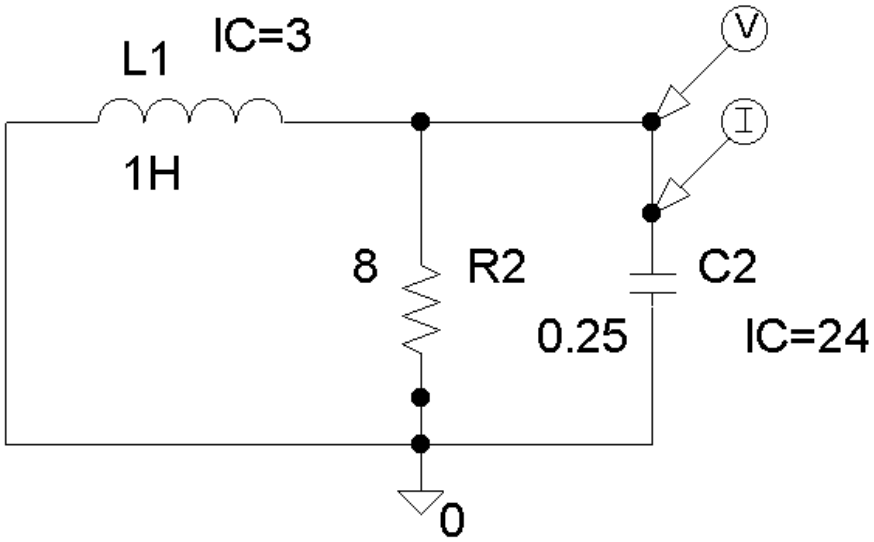

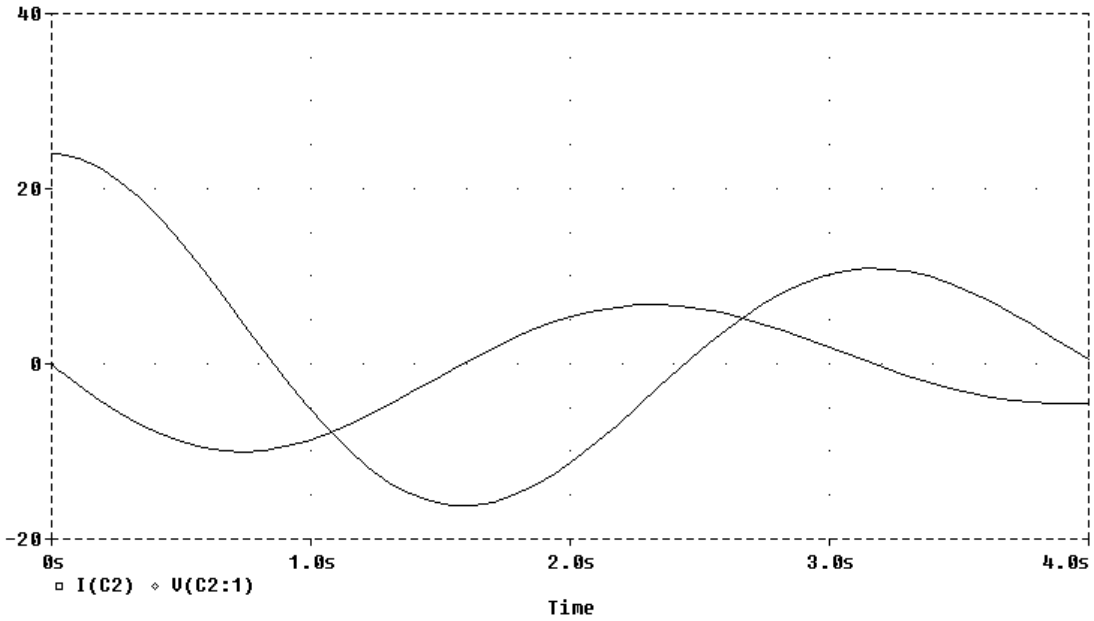

www.konkur.in

Chapter 8, Solution 74.
The dual is constructed as shown below.

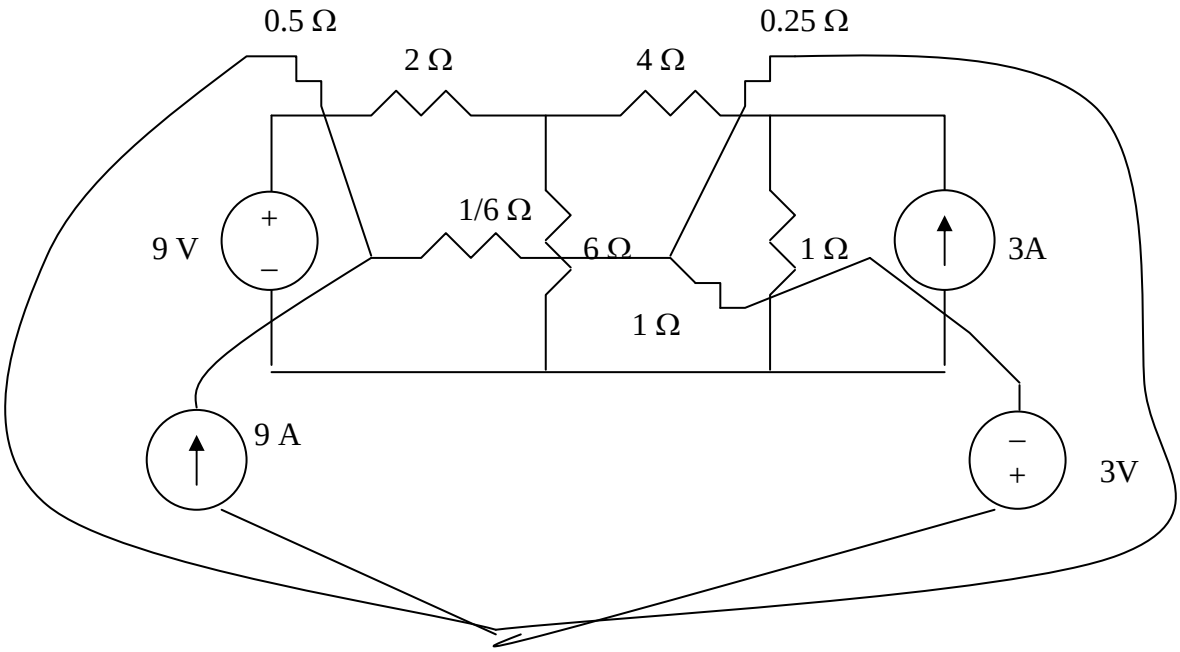

The dual is redrawn as shown below.

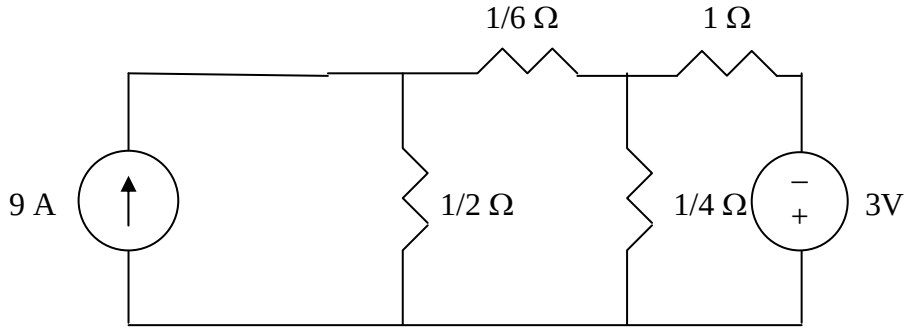

www.konkur.in

Chapter 8, Solution 75.

The dual circuit is connected as shown in Figure (a). It is redrawn in Figure (b).

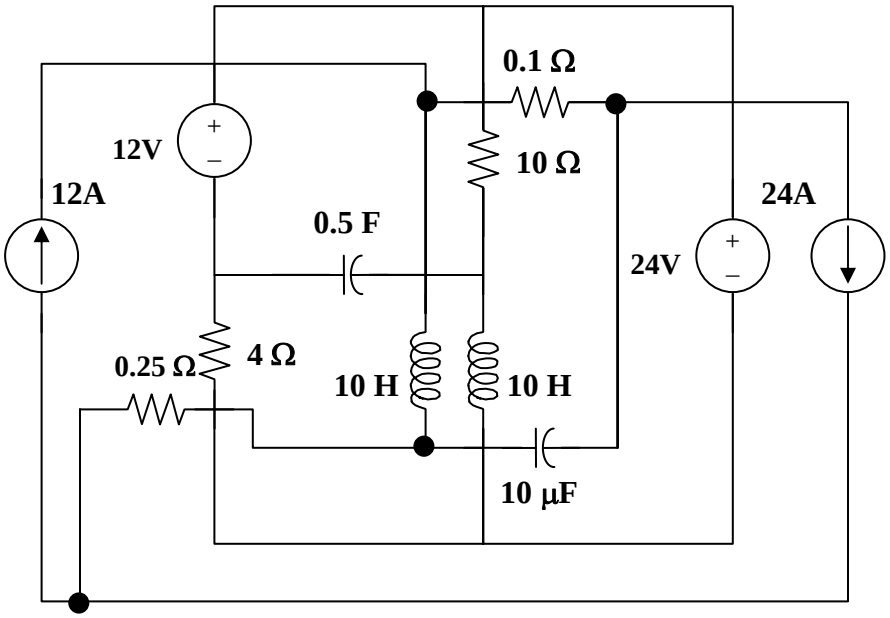

(a)

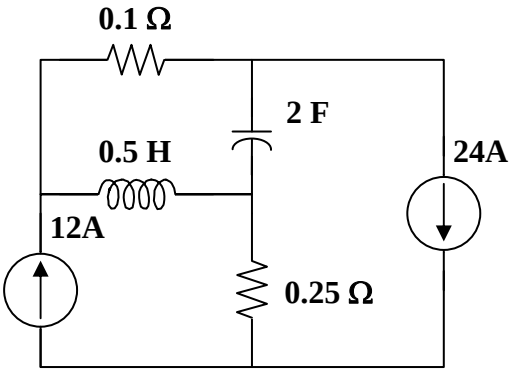

(b)

www.konkur.in

Chapter 8, Solution 77.

The dual is obtained from the original circuit as shown in Figure (a). It is redrawn in Figure (b).

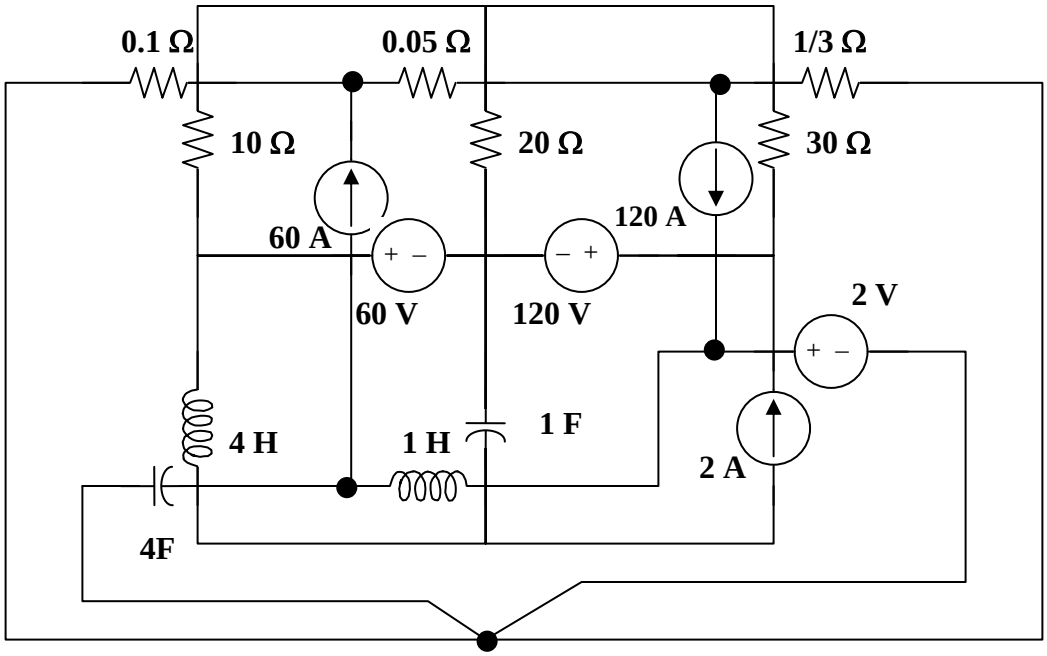

(a)

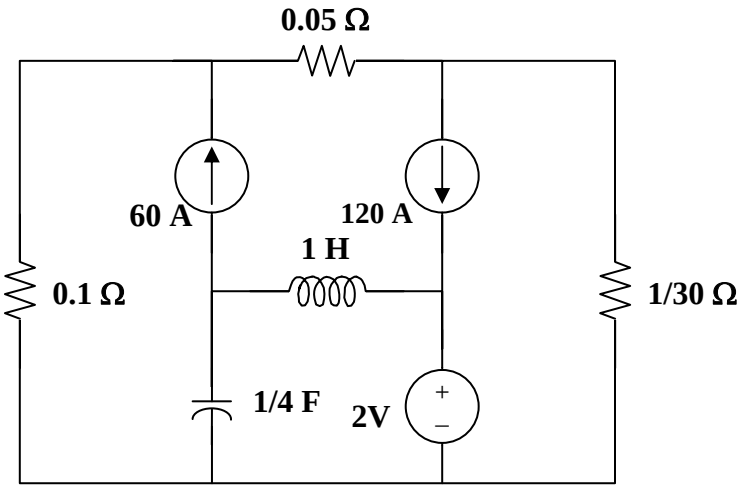

(b)

www.konkur.in

Chapter 8, Solution 77.

The dual is constructed in Figure (a) and redrawn in Figure (b).

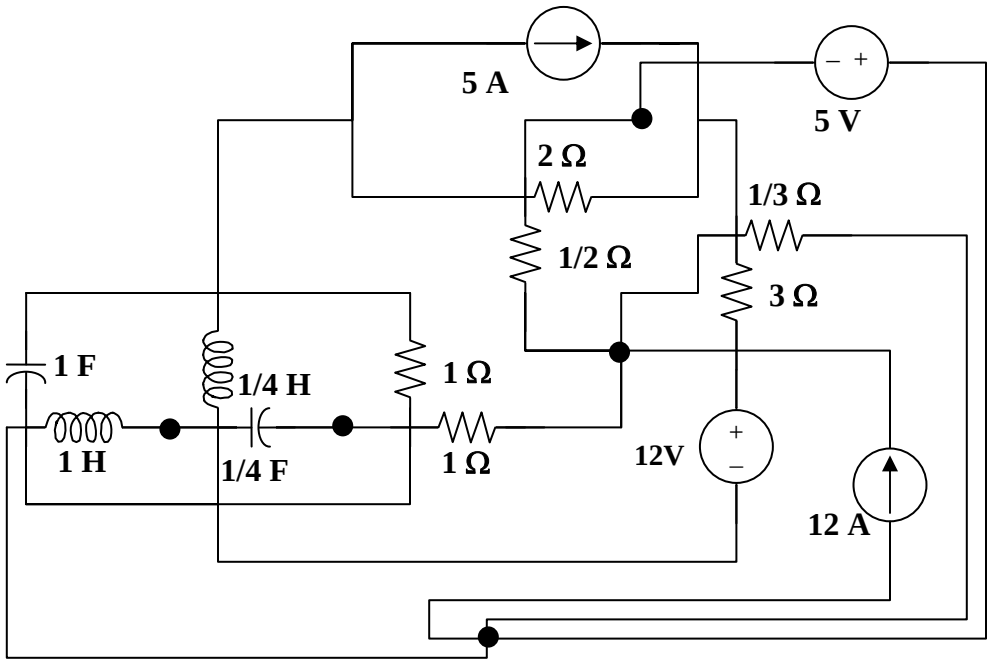

(a)

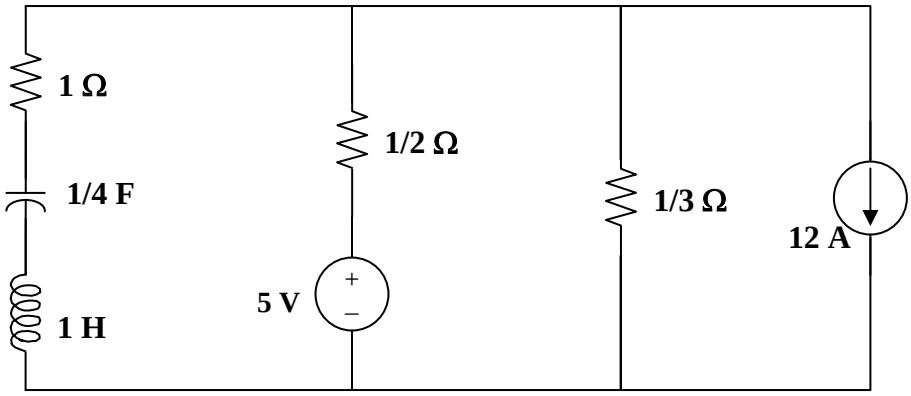

(b)

www.konkur.in

Chapter 8, Solution 78.

The voltage across the igniter is $v_R = v_C$ since the circuit is a parallel RLC type.

$$v_C(0) = 12, \text{ and } i_L(0) = 0.$$

$$\alpha = 1/(2RC) = 1/(2x3x1/30) = 5$$

$$\omega_o = 1/\sqrt{LC} = 1/\sqrt{60x10^{-3}x1/30} = 22.36$$

$\alpha < \omega_o$ produces an underdamped response.

$$s_{1,2} = -\alpha \pm \sqrt{\alpha^2 - \omega_o^2} = -5 \pm j21.794$$

$$v_C(t) = e^{-5t}(A\cos 21.794t + B\sin 21.794t) \qquad (1)$$

$$v_C(0) = 12 = A$$

$$dv_C/dt = -5[(A\cos 21.794t + B\sin 21.794t)e^{-5t}]$$

$$+ 21.794[(-A\sin 21.794t + B\cos 21.794t)e^{-5t}] \qquad (2)$$

$$dv_C(0)/dt = -5A + 21.794B$$

But, $dv_C(0)/dt = -[v_C(0) + Ri_L(0)]/(RC) = -(12 + 0)/(1/10) = -120$

Hence, $-120 = -5A + 21.794B$, leads to $B\ (5x12 - 120)/21.794 = -2.753$

At the peak value, $dv_C(t_o)/dt = 0$, i.e.,

$$0 = A + B\tan 21.794t_o + (A21.794/5)\tan 21.794t_o - 21.794B/5$$

$$(B + A21.794/5)\tan 21.794t_o = (21.794B/5) - A$$

$$\tan 21.794t_o = [(21.794B/5) - A]/(B + A21.794/5) = -24/49.55 = -0.484$$

Therefore, $21.7945t_o = |-0.451|$

$$t_o = |-0.451|/21.794 = \mathbf{20.68\ ms}$$

www.konkur.in

Chapter 8, Solution 79.

For critical damping of a parallel RLC circuit,

$$\alpha = \omega_o \quad \longrightarrow \quad \frac{1}{2RC} = \frac{1}{\sqrt{LC}}$$

Hence,

$$\boldsymbol{C = \frac{L}{4R^2} = \frac{0.25}{4x144} = \underline{434\mu F}}$$

www.konkur.in

Chapter 8, Solution 80.

$$t_1 = 1/|s_1| = 0.1\text{x}10^{-3} \text{ leads to } s_1 = -1000/0.1 = -10{,}000$$

$$t_2 = 1/|s_2| = 0.5\text{x}10^{-3} \text{ leads to } s_1 = -2{,}000$$

$$s_1 = -\alpha - \sqrt{\alpha^2 - \omega_o^2}$$

$$s_2 = -\alpha + \sqrt{\alpha^2 - \omega_o^2}$$

$$s_1 + s_2 = -2\alpha = -12{,}000, \text{ therefore } \alpha = 6{,}000 = R/(2L)$$

$$L = R/12{,}000 = 50{,}000/12{,}000 = \mathbf{4.167H}$$

$$s_2 = -\alpha + \sqrt{\alpha^2 - \omega_o^2} = -2{,}000$$

$$\alpha - \sqrt{\alpha^2 - \omega_o^2} = 2{,}000$$

$$6{,}000 - \sqrt{\alpha^2 - \omega_o^2} = 2{,}000$$

$$\sqrt{\alpha^2 - \omega_o^2} = 4{,}000$$

$$\alpha^2 - \omega_o^2 = 16\text{x}10^6$$

$$\omega_o^2 = \alpha^2 - 16\text{x}10^6 = 36\text{x}10^6 - 16\text{x}10^6$$

$$\omega_o = 10^3\sqrt{20} = 1/\sqrt{LC}$$

$$C = 1/(20\text{x}10^6\text{x}4.167) = \mathbf{12\ nF}$$

www.konkur.in

Chapter 8, Solution 81.

$$t = 1/\alpha = 0.25 \text{ leads to } \alpha = 4$$

But, α 1/(2RC) or, $C = 1/(2\alpha R) = 1/(2x4x200) =$ **625 μF**

$$\omega_d = \sqrt{\omega_o^2 - \alpha^2}$$

$$\omega_o^2 = \omega_d^2 + \alpha^2 = (2\pi 4x10^3)^2 + 16 \cong (2\pi 4x10^3 0^2 = 1/(LC)$$

This results in $L = 1/(64\pi^2 x10^6 x625x10^{-6}) =$ **2.533 μH**

www.konkur.in

Chapter 8, Solution 82.

For t = 0-, v(0) = 0.

For t > 0, the circuit is as shown below.

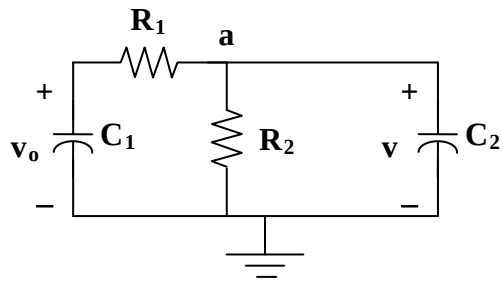

At node a,

$$(v_o - v/R_1 = (v/R_2) + C_2 dv/dt$$

$$v_o = v(1 + R_1/R_2) + R_1C_2\, dv/dt$$

$$60 = (1 + 5/2.5) + (5x10^6\ x5x10^{-6})dv/dt$$

$$60 = 3v + 25dv/dt$$

$$v(t) = V_s + [Ae^{-3t/25}]$$

where $3V_s = 60$ yields $V_s = 20$

$$v(0) = 0 = 20 + A \text{ or } A = -20$$

$$v(t) = \mathbf{20(1 - e^{-3t/25})V}$$

www.konkur.in

Chapter 8, Solution 83.

$$i = i_D + Cdv/dt \qquad (1)$$

$$-v_s + iR + Ldi/dt + v = 0 \qquad (2)$$

Substituting (1) into (2),

$$v_s = Ri_D + RCdv/dt + Ldi_D/dt + LCd^2v/dt^2 + v = 0$$

$$LCd^2v/dt^2 + RCdv/dt + Ri_D + Ldi_D/dt = v_s$$

$$\mathbf{d^2v/dt^2 + (R/L)dv/dt + (R/LC)i_D + (1/C)di_D/dt = v_s/LC}$$

www.konkur.in

Chapter 9, Solution 1.

(a) V_m = **50 V**.

(b) Period $T = \frac{2\pi}{\omega} = \frac{2\pi}{30} = \underline{0.2094s}$ = **209.4ms**

(c) Frequency f = ω/(2π) = 30/(2π) = **4.775 H_z**.

(d) At t=1ms, v(0.01) = 50cos(30x0.01rad + 10˚)
= 50cos(1.72˚ + 10˚) = **44.48 V** and ωt = **0.3 rad**.

www.konkur.in

Chapter 9, Solution 2.

(a) amplitude = **15 A**

(b) $\omega = 25\pi$ = **78.54 rad/s**

(c) $f = \dfrac{\omega}{2\pi}$ = **12.5Hz**

(d) $I_s = 15\angle 25°$ A

$I_s(2\text{ ms}) = 15\cos((500\pi)(2\times 10^{-3}) + 25°)$

$= 15\cos(\pi + 25°) = 15\cos(205°)$

= **–13.595 A**

www.konkur.in

Chapter 9, Solution 3.

(a) $10 \sin(\omega t + 30°) = 10 \cos(\omega t + 30° - 90°) = \mathbf{10\cos(\omega t - 60°)}$

(b) $-9 \sin(8t) = \mathbf{9\cos(8t + 90°)}$

(c) $-20 \sin(\omega t + 45°) = 20 \cos(\omega t + 45° + 90°) = \mathbf{20\cos(\omega t + 135°)}$

(a) $10\cos(\omega t - 60°)$, (b) $9\cos(8t + 90°)$, (c) $20\cos(\omega t + 135°)$

www.konkur.in

Chapter 9, Solution 4.

Design a problem to help other students to better understand sinusoids.

Although there are many ways to work this problem, this is an example based on the same kind of problem asked in the third edition.

Problem

(a) Express $v = 8\cos(7t + 15°)$ in sine form.

(b) Convert $i = -10\sin(3t - 85°)$ to cosine form.

Solution

(a) $v = 8\cos(7t + 15°) = 8\sin(7t + 15° + 90°) = \mathbf{8\sin(7t + 105°)}$

(b) $i = -10\sin(3t - 85°) = 10\cos(3t - 85° + 90°) = \mathbf{10\cos(3t + 5°)}$

www.konkur.in

Chapter 9, Solution 5.

$v_1 = 45 \sin(\omega t + 30°)$ V = $45 \cos(\omega t + 30° - 90°) = 45 \cos(\omega t - 60°)$ V
$v_2 = 50 \cos(\omega t - 30°)$ V

This indicates that the phase angle between the two signals is **30°** and that $\boldsymbol{v_1}$ **lags** $\boldsymbol{v_2}$.

www.konkur.in

Chapter 9, Solution 6.

(a) $v(t) = 10\cos(4t - 60°)$
$i(t) = 4\sin(4t + 50°) = 4\cos(4t + 50° - 90°) = 4\cos(4t - 40°)$
Thus, **i(t) leads v(t) by 20°**.

(b) $v_1(t) = 4\cos(377t + 10°)$
$v_2(t) = -20\cos(377t) = 20\cos(377t + 180°)$
Thus, **$v_2(t)$ leads $v_1(t)$ by 170°**.

(c) $x(t) = 13\cos(2t) + 5\sin(2t) = 13\cos(2t) + 5\cos(2t - 90°)$
$\mathbf{X} = 13\angle 0° + 5\angle -90° = 13 - j5 = 13.928\angle -21.04°$
$x(t) = 13.928\cos(2t - 21.04°)$
$y(t) = 15\cos(2t - 11.8°)$
phase difference $= -11.8° + 21.04° = 9.24°$
Thus, **y(t) leads x(t) by 9.24°**.

www.konkur.in

Chapter 9, Solution 7.

If $f(\phi) = \cos\phi + j\sin\phi$,

$$\frac{df}{d\phi} = -\sin\phi + j\cos\phi = j(\cos\phi + j\sin\phi) = jf(\phi)$$

$$\frac{df}{f} = j\,d\phi$$

Integrating both sides

$\ln f = j\phi + \ln A$

$f = Ae^{j\phi} = \cos\phi + j\sin\phi$

$f(0) = A = 1$

i.e. $\mathbf{f(\phi) = e^{j\phi} = \cos\phi + j\sin\phi}$

www.konkur.in

Chapter 9, Solution 8.

(a) $$\frac{60\angle 45^\circ}{7.5 - j10} + j2 = \frac{60\angle 45^\circ}{12.5\angle -53.13^\circ} + j2$$

$$= 4.8\angle 98.13^\circ + j2 = -0.6788 + j4.752 + j2$$

$$= \mathbf{-0.6788 + j6.752}$$

(b) $(6-j8)(4+j2) = 24-j32+j12+16 = 40-j20 = 44.72\angle -26.57^\circ$

$$\frac{32\angle -20^\circ}{(6-j8)(4+j2)} + \frac{20}{-10+j24} = \frac{32\angle -20^\circ}{44.72\angle -26.57^\circ} + \frac{20}{26\angle 112.62^\circ}$$

$= 0.7156\angle 6.57^\circ + 0.7692\angle -112.62^\circ = 0.7109 + j0.08188 - 0.2958 - j0.71$

$= \mathbf{0.4151 - j0.6281}$

(c) $20 + (16\angle -50^\circ)(13\angle 67.38^\circ) = 20 + 208\angle 17.38^\circ = 20 + 198.5 + j62.13$

$= \mathbf{218.5 + j62.13}$

www.konkur.in

Chapter 9, Solution 9.

(a) $(5\angle 30°)(6 - j8 + 1.1197 + j0.7392) = (5\angle 30°)(7.13 - j7.261)$
$= (5\angle 30°)(10.176\angle -45.52°) =$

$\mathbf{50.88\angle -15.52°}$.

(b) $\dfrac{(10\angle 60°)(35\angle -50°)}{(-3 + j5) = (5.83\angle 120.96°)} =$ $\mathbf{60.02\angle -110.96°}$.

www.konkur.in

Chapter 9, Solution 10.

Design a problem to help other students to better understand phasors.

Although there are many ways to work this problem, this is an example based on the same kind of problem asked in the third edition.

Problem

Given that $z_1 = 6 - j8$, $z_2 = 10\angle{-30^\circ}$, and $z_3 = 8e^{-j120^\circ}$, find:

(a) $z_1 + z_2 + z_3$

(b) $z_1 z_2 / z_3$

Solution

(a) $z_1 = 6 - j8,\ \ z_2 = 8.66 - j5,$ and $z_3 = -4 - j6.9282$

$z_1 + z_2 + z_3 =$ **(10.66 – j19.928)Ω**

(b) $\dfrac{z_1 z_2}{z_3} = [(10\angle{-53.13^\circ})(10\angle{-30^\circ})/(8\angle{-120^\circ})] = 12.5\angle 36.87^\circ\Omega =$ **(10 + j7.5) Ω**

www.konkur.in

Chapter 9, Solution 11.

(a) $V = \underline{21 < -15^o \text{ V}}$

(b) $i(t) = 8\sin(10t + 70^o + 180^o) = 8\cos(10t + 70^o + 180^o - 90^o) = 8\cos(10t + 160^o)$

I = 8∠160° mA

(c) $v(t) = 120\sin(10^3 t - 50^o) = 120\cos(10^3 t - 50^o - 90^o)$

V = 120∠–140° V

(d) $i(t) = -60\cos(30t + 10^o) = 60\cos(30t + 10^o + 180^o)$

I = 60∠–170° mA

www.konkur.in

Chapter 9, Solution 12.

Let **X** = 4∠40° and **Y** = 20∠–30°. Evaluate the following quantities and express your results in polar form.

(X + **Y**)/**X***
(X - **Y**)*
(**X** + **Y**)/**X**

X = 3.064+j2.571; **Y** = 17.321–j10

(a) **(X** + **Y**)**X*** = $(20.38 - j7.429)(4\angle -40°)$
$= (21.69\angle -20.03°)(4\angle -40°) = 86.76\angle -60.03°$
= **86.76∠–60.03˚**

(b) **(X** – **Y**)* = (–14.257+j12.571)* = **19.41∠–139.63˚**

(c) (**X** + **Y**)/**X** = (21.69∠–20.03˚)/(4∠40˚) = **5.422∠–60.03˚**

www.konkur.in

Chapter 9, Solution 13.

(a) $\mathbf{(-0.4324 + j0.4054) + (-0.8425 - j0.2534) = \underline{-1.2749 + j0.1520}}$

(b) $\dfrac{50\angle -30^o}{24\angle 150^o} = \underline{-2.0833} = \mathbf{-2.083}$

(c) (2+j3)(8-j5) –(-4) = **35 +j14**

www.konkur.in

Chapter 9, Solution 14.

(a) $\dfrac{3-\text{j}14}{-7+\text{j}17} = \dfrac{14.318\angle -77.91^\circ}{18.385\angle 112.38^\circ} = 0.7788\angle 169.71^\circ = \underline{-0.7663+\text{j}0.13912}$

(b) $\dfrac{(62.116+j231.82+138.56-j80)(60-j80)}{(67+j84)(16.96+j10.5983)} = \dfrac{24186-6944.9}{246.06+j2134.7} = \underline{-1.922-j11.55}$

(c) $\left[\dfrac{10+j20}{3+j4}\right]^2 \sqrt{(10+j5)(16-j20)}$

$= [(22.36\angle 63.43^\circ)/(5\angle 53.13^\circ)]^2[(11.18\angle 26.57^\circ)(25.61\angle -51.34^\circ)]^{0.5}$
$= [4.472\angle 10.3^\circ]^2[286.3\angle -24.77^\circ]^{0.5} = (19.999\angle 20.6^\circ)(16.921\angle -12.38^\circ) = 338.4\angle 8.22^\circ$

or **334.9+j48.38**

www.konkur.in

Chapter 9, Solution 15.

(a) $$\begin{vmatrix} 10+j6 & 2-j3 \\ -5 & -1+j \end{vmatrix} = -10 - j6 + j10 - 6 + 10 - j15$$

$$= \mathbf{-6 - j11}$$

(b) $$\begin{vmatrix} 20\angle -30^\circ & -4\angle -10^\circ \\ 16\angle 0^\circ & 3\angle 45^\circ \end{vmatrix} = 60\angle 15^\circ + 64\angle -10^\circ$$

$$= 57.96 + j15.529 + 63.03 - j11.114$$

$$= \mathbf{120.99 + j4.415}$$

(c) $$\begin{vmatrix} 1-j & -j & 0 \\ j & 1 & -j \\ 1 & j & 1+j \end{vmatrix} \begin{matrix} 1-j & -j & 0 \\ j & 1 & -j \end{matrix} = 1+1+0-1-0+j^2(1-j)+j^2(1+j)$$

$$= 1-1(1-j+1+j)$$

$$= 1 - 2 = \mathbf{-1}$$

www.konkur.in

Chapter 9, Solution 16.

(a) $-20\cos(4t + 135°) = 20\cos(4t + 135° - 180°)$
$= 20\cos(4t - 45°)$
The phasor form is $\mathbf{20\angle -45°}$

(b) $8\sin(20t + 30°) = 8\cos(20t + 30° - 90°)$
$= 8\cos(20t - 60°)$
The phasor form is $\mathbf{8\angle -60°}$

(c) $20\cos(2t) + 15\sin(2t) = 20\cos(2t) + 15\cos(2t - 90°)$
The phasor form is $20\angle 0° + 15\angle -90° = 20 - j15 = \mathbf{25\angle -36.87°}$

www.konkur.in

Chapter 9, Solution 17.

$$V = V_1 + V_2 = 10 < -60^o + 12 < 30^o = 5 - j8.66 + 10.392 + j6 = 15.62 < -9.805^o$$

v(t) = **15.62cos(50t–9.8˚) V**

www.konkur.in

Chapter 9, Solution 18.

(a) $v_1(t) = \mathbf{60\cos(t + 15°)}$

(b) $\mathbf{V}_2 = 6 + j8 = 10\angle 53.13°$

$v_2(t) = \mathbf{10\cos(40t + 53.13°)}$

(c) $i_1(t) = \mathbf{2.8\cos(377t - \pi/3)}$

(d) $\mathbf{I}_2 = -0.5 - j1.2 = 1.3\angle 247.4°$

$i_2(t) = \mathbf{1.3\cos(10^3 t + 247.4°)}$

www.konkur.in

Chapter 9, Solution 19.

(a) $3\angle 10° - 5\angle -30° = 2.954 + j0.5209 - 4.33 + j2.5$
$= -1.376 + j3.021$
$= 3.32\angle 114.49°$

Therefore, $3\cos(20t + 10°) - 5\cos(20t - 30°)$
$=$ **$3.32\cos(20t + 114.49°)$**

(b) $40\angle -90° + 30\angle -45° = -j40 + 21.21 - j21.21$
$= 21.21 - j61.21$
$= 64.78\angle -70.89°$

Therefore, $40\sin(50t) + 30\cos(50t - 45°) =$ **$64.78\cos(50t - 70.89°)$**

(c) Using $\sin\alpha = \cos(\alpha - 90°)$,
$20\angle -90° + 10\angle 60° - 5\angle -110° = -j20 + 5 + j8.66 + 1.7101 + j4.699$
$= 6.7101 - j6.641$
$= 9.44\angle -44.7°$

Therefore, $20\sin(400t) + 10\cos(400t + 60°) - 5\sin(400t - 20°)$
$=$ **$9.44\cos(400t - 44.7°)$**

www.konkur.in

Chapter 9, Solution 20.

7.5cos(10t+30˚) A can be represented by 7.5∠30˚ and 120cos(10t+75˚) V can be represented by 120∠75˚. Thus,

$$\mathbf{Z} = \mathbf{V}/\mathbf{I} = (120\angle 75^\circ)/(7.5\angle 30^\circ) = 16\angle 45^\circ \text{ or } \mathbf{(11.314+j11.314)\ \Omega}.$$

www.konkur.in

Chapter 9, Solution 21.

(a) $F = 5\angle 15^o - 4\angle \underline{-30^o - 90^o} = 6.8296 + j4.758 = 8.3236\angle 34.86^o$

$$\underline{\boldsymbol{f(t) = 8.324\cos(30t + 34.86^o)}}$$

(b) $G = 8\angle -90^o + 4\angle 50^o = 2.571 - j4.9358 = 5.565\angle -62.49^o$

$$\underline{\boldsymbol{g(t) = 5.565\cos(t - 62.49^o)}}$$

(c) $\mathrm{H} = \dfrac{1}{\mathrm{j}\omega}\left(10\angle 0^{\mathrm{o}} + 50\angle -90^{\mathrm{o}}\right), \qquad \omega = 40$

i.e. $\mathrm{H} = 0.25\angle -90^{\mathrm{o}} + 1.25\angle -180^{\mathrm{o}} = -\mathrm{j}0.25 - 1.25 = 1.2748\angle -168.69^{\mathrm{o}}$

$$\mathrm{h(t)} = \mathbf{1.2748\cos(40t - 168.69°)}$$

www.konkur.in

Chapter 9, Solution 22.

Let f(t) $=10v(t)+4\dfrac{dv}{dt}-2\int_{-\infty}^{t}v(t)dt$

$$F=10V+j\omega 4V-\frac{2V}{j\omega},\qquad \omega=5,\qquad V=55\angle 45^{o}$$

$$F=10V+j20V+j0.4V=(10+j20.4)V=22.72\angle 63.89°(55\angle 45°)=1249.6\angle 108.89^{o}$$

f(t) = **1249.6cos(5t+108.89˚)**

www.konkur.in

Chapter 9, Solution 23.

(a) v = [110sin(20t+30˚) + 220cos(20t–90˚)] V leads to **V** = 110∠(30˚–90˚) + 220∠–90˚ = 55–j95.26 – j220 = 55–j315.3 = 320.1∠–80.11˚ or

v = **320.1cos(20t–80.11˚) A**.

(b) i = [30cos(5t+60˚)–20sin(5t+60˚)] A leads to **I** = 30∠60˚ – 20∠(60˚–90˚) = 15+j25.98 – (17.321–j10) = –2.321+j35.98 = 36.05∠93.69˚ or

i = **36.05cos(5t+93.69˚) A**.

(a) 320.1cos(20t–80.11˚) A, (b) 36.05cos(5t+93.69˚) A

www.konkur.in

Chapter 9, Solution 24.

(a)

$$\mathbf{V} + \frac{\mathbf{V}}{j\omega} = 10\angle 0°, \quad \omega = 1$$

$$\mathbf{V}(1 - j) = 10$$

$$\mathbf{V} = \frac{10}{1 - j} = 5 + j5 = 7.071\angle 45°$$

Therefore,

v(t) = **7.071cos(t + 45°) V**

(b)

$$j\omega\mathbf{V} + 5\mathbf{V} + \frac{4\mathbf{V}}{j\omega} = 20\angle(10° - 90°), \quad \omega = 4$$

$$\mathbf{V}\left(j4 + 5 + \frac{4}{j4}\right) = 20\angle -80°$$

$$\mathbf{V} = \frac{20\angle -80°}{5 + j3} = 3.43\angle -110.96°$$

Therefore,

v(t) = **3.43cos(4t – 110.96°) V**

www.konkur.in

Chapter 9, Solution 25.

(a)

$$2j\omega\mathbf{I} + 3\mathbf{I} = 4\angle 45°, \quad \omega = 2$$
$$\mathbf{I}(3 + j4) = 4\angle 45°$$
$$I = \frac{4\angle 45°}{3 + j4} = \frac{4\angle 45°}{5\angle 53.13°} = 0.8\angle -8.13°$$

Therefore, i(t) = **800cos(2t – 8.13°) mA**

(b)

$$10\frac{\mathbf{I}}{j\omega} + j\omega\mathbf{I} + 6\mathbf{I} = 5\angle 22°, \quad \omega = 5$$
$$(-j2 + j5 + 6)\mathbf{I} = 5\angle 22°$$
$$\mathbf{I} = \frac{5\angle 22°}{6 + j3} = \frac{5\angle 22°}{6.708\angle 26.56°} = 0.745\angle -4.56°$$

Therefore, i(t) = **745 cos(5t – 4.56°) mA**

www.konkur.in

Chapter 9, Solution 26.

$$j\omega\mathbf{I} + 2\mathbf{I} + \frac{\mathbf{I}}{j\omega} = 1\angle 0°, \quad \omega = 2$$

$$\mathbf{I}\left(j2 + 2 + \frac{1}{j2}\right) = 1$$

$$\mathbf{I} = \frac{1}{2 + j1.5} = 0.4\angle -36.87°$$

Therefore, i(t) = **0.4 cos(2t – 36.87°)**

www.konkur.in

Chapter 9, Solution 27.

$$j\omega\mathbf{V} + 50\mathbf{V} + 100\frac{\mathbf{V}}{j\omega} = 110\angle -10°, \quad \omega = 377$$

$$\mathbf{V}\left(j377 + 50 - \frac{j100}{377}\right) = 110\angle -10°$$

$$\mathbf{V}\,(380.6\angle 82.45°) = 110\angle -10°$$

$$\mathbf{V} = 0.289\angle -92.45°$$

Therefore, v(t) = **289 cos(377t – 92.45°) mV**.

www.konkur.in

Chapter 9, Solution 28.

$$i(t) = \frac{v_s(t)}{R} = \frac{156\cos(377t + 45°)}{15} = \mathbf{10.4cos(377t+45^\circ)\ A}.$$

www.konkur.in

Chapter 9, Solution 29.

$$\mathbf{Z} = \frac{1}{j\omega C} = \frac{1}{j(10^6)(2\times 10^{-6})} = -j0.5$$

$$\mathbf{V} = \mathbf{IZ} = (4\angle 25°)(0.5\angle -90°) = 2\angle -65°$$

Therefore v(t) = **2 sin(10^{6}t – 65°) V**.

www.konkur.in

Chapter 9, Solution 30.

Since R and C are in parallel, they have the same voltage across them. For the resistor,

$$V = I_R R \quad \longrightarrow \quad I_R = V / R = \frac{100 < 20^o}{40k} = 2.5 < 20^o \text{ mA}$$

$$i_R = \underline{2.5\cos(60t + 20^o) \text{ mA}}$$

For the capacitor,

$$i_C = C\frac{dv}{dt} = 50x10^{-6}(-60)x100\sin(60t + 20^o) = \underline{-300\sin(60t + 20^o) \text{ mA}}$$

www.konkur.in

Chapter 9, Solution 31.

$$L = 240mH \longrightarrow j\omega L = j2x240x10^{-3} = j0.48$$

$$C = 5mF \longrightarrow \frac{1}{j\omega C} = \frac{1}{j2x5x10^{-3}} = -j100$$

$$Z = 80 + j0.48 - j100 = 80 - j99.52 =$$

$$I = \frac{V}{Z} = \frac{10 < 0^0}{80 - j99.52} = 0.0783 < 51.206^o$$

i(t) = **78.3cos(2t+51.21˚) mA**

www.konkur.in

Chapter 9, Solution 32.

Using Fig. 9.40, design a problem to help other students to better understand phasor relationships for circuit elements.

Although there are many ways to work this problem, this is an example based on the same kind of problem asked in the third edition.

Problem

Two elements are connected in series as shown in Fig. 9.40.
If i = 12 cos (2t - 30°) A, find the element values.

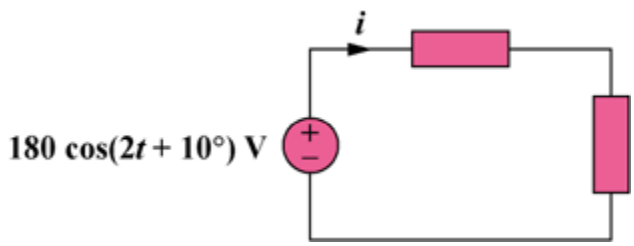

Figure 9.40

Solution

$$\mathbf{V} = 180\angle 10°, \qquad \mathbf{I} = 12\angle -30°, \qquad \omega = 2$$

$$\mathbf{Z} = \frac{\mathbf{V}}{\mathbf{I}} = \frac{180\angle 10°}{12\angle -30°} = 15\angle 40° = 11.49 + j9.642\ \Omega$$

One element is a resistor with R = **11.49 Ω**.
The other element is an inductor with ωL = 9.642 or L = **4.821 H**.

www.konkur.in

Chapter 9, Solution 33.

$$110 = \sqrt{v_R^2 + v_L^2}$$

$$v_L = \sqrt{110^2 - v_R^2}$$

$$v_L = \sqrt{110^2 - 85^2} = \mathbf{69.82\ V}$$

www.konkur.in

Chapter 9, Solution 34.

$$v_o = 0 \text{ when } jX_L - jX_C = 0 \text{ so } X_L = X_C \text{ or } \omega L = \frac{1}{\omega C} \longrightarrow \omega = \frac{1}{\sqrt{LC}}.$$

$$\omega = \frac{1}{\sqrt{(5\times10^{-3})(20\times10^{-3})}} = \mathbf{100\ rad/s}$$

www.konkur.in

Chapter 9, Solution 35.

$$v_s(t) = 50\cos 200t \quad \longrightarrow \quad V_s = 50 < 0^o, \omega = 200$$

$$5mF \quad \longrightarrow \quad \frac{1}{j\omega C} = \frac{1}{j200x5x10^{-3}} = -j$$

$$20mH \quad \longrightarrow \quad j\omega L = j20x10^{-3}x200 = j4$$

$$Z_{in} = 10 - j + j4 = 10 + j3$$

$$I = \frac{V_s}{Z_{in}} = \frac{50 < 0^o}{10 + j3} = 4.789 < -16.7^o$$

i(t) = **4.789cos(200t–16.7°) A**

www.konkur.in

Chapter 9, Solution 36.

Using Fig. 9.43, design a problem to help other students to better understand impedance.

Although there are many ways to work this problem, this is an example based on the same kind of problem asked in the third edition.

Problem

In the circuit in Fig. 9.43, determine *i*. Let v_s = 60 cos(200*t* - 10°) V.

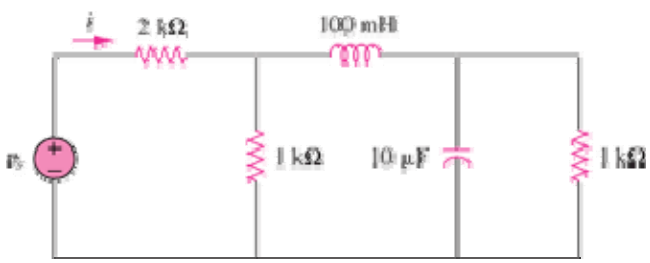

Figure 9.43

Solution

Let Z be the input impedance at the source.

$$100\text{ mH} \longrightarrow j\omega L = j200x100x10^{-3} = j20$$

$$10\mu\text{F} \longrightarrow \frac{1}{j\omega C} = \frac{1}{j10x10^{-6}x200} = -j500$$

1000//-j500 = 200 –j400
1000//(j20 + 200 –j400) = 242.62 –j239.84

$$Z = 2242.62 - j239.84 = 2255\angle -6.104^o$$

$$I = \frac{60\angle -10^o}{2255\angle -6.104^o} = 26.61\angle -3.896^o \text{ mA}$$

$$\boldsymbol{i = \underline{266.1\cos(200t - 3.896^o)}\,\text{mA}}$$

www.konkur.in

Chapter 9, Solution 37.

$$Y = (1/4) + (1/(j8)) + (1/(-j10)) = 0.25 - j0.025$$

$$= \mathbf{(250-j25)\ mS}$$

www.konkur.in

Chapter 9, Solution 38.

Using Fig. 9.45, design a problem to help other students to better understand admittance.

Although there are many ways to work this problem, this is an example based on the same kind of problem asked in the third edition.

Problem

Find $i(t)$ and $v(t)$ in each of the circuits of Fig. 9.45.

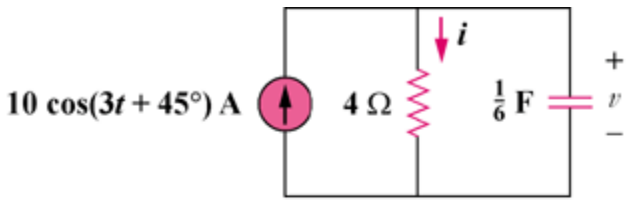

(a)

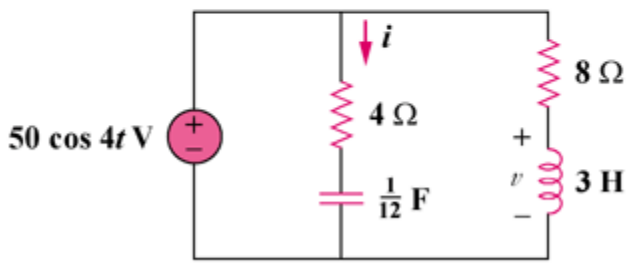

(b)

Figure 9.45

Solution

(a) $\frac{1}{6}\text{ F} \longrightarrow \frac{1}{j\omega C} = \frac{1}{j(3)(1/6)} = -j2$

$$\mathbf{I} = \frac{-j2}{4-j2}(10\angle 45°) = 4.472\angle -18.43°$$

Hence, i(t) = **4.472 cos(3t – 18.43?) A**

$$\mathbf{V} = 4\mathbf{I} = (4)(4.472\angle -18.43°) = 17.89\angle -18.43°$$

Hence, v(t) = **17.89 cos(3t – 18.43?) V**

(b) $\frac{1}{12}\text{ F} \longrightarrow \frac{1}{j\omega C} = \frac{1}{j(4)(1/12)} = -j3$

www.konkur.in

$3\text{ H} \longrightarrow j\omega L = j(4)(3) = j12$

$$\mathbf{I} = \frac{\mathbf{V}}{\mathbf{Z}} = \frac{50\angle 0^\circ}{4 - j3} = 10\angle 36.87^\circ$$

Hence, i(t) = **10 cos(4t + 36.87?) A**

$$\mathbf{V} = \frac{j12}{8 + j12}(50\angle 0^\circ) = 41.6\angle 33.69^\circ$$

Hence, v(t) = **41.6 cos(4t + 33.69?) V**

www.konkur.in

Chapter 9, Solution 39.

$$Z_{eq} = 4 + j20 + 10//(-j14 + j25) = \underline{9.135 + j27.47 \ \ \Omega}$$

= **(9.135+j27.47) Ω**

$$I = \frac{V}{Z_{eq}} = \frac{12}{9.135 + j27.47} = 0.4145 < -71.605^o$$

i(t) = **414.5cos(10t–71.6°) mA**

www.konkur.in

Chapter 9, Solution 40.

(a) For $\omega = 1$,

$$1\text{ H} \longrightarrow j\omega L = j(1)(1) = j$$

$$0.05\text{ F} \longrightarrow \frac{1}{j\omega C} = \frac{1}{j(1)(0.05)} = -j20$$

$$\mathbf{Z} = j + 2 \,||\, (-j20) = j + \frac{-j40}{2 - j20} = 1.98 + j0.802$$

$$\mathbf{I}_o = \frac{\mathbf{V}}{\mathbf{Z}} = \frac{4\angle 0°}{1.98 + j0.802} = \frac{4\angle 0°}{2.136\angle 22.05°} = 1.872\angle -22.05°$$

Hence,

$$i_o(t) = \mathbf{1.872\cos(t - 22.05°)\text{ A}}$$

(b) For $\omega = 5$,

$$1\text{ H} \longrightarrow j\omega L = j(5)(1) = j5$$

$$0.05\text{ F} \longrightarrow \frac{1}{j\omega C} = \frac{1}{j(5)(0.05)} = -j4$$

$$\mathbf{Z} = j5 + 2 \,||\, (-j4) = j5 + \frac{-j4}{1 - j2} = 1.6 + j4.2$$

$$\mathbf{I}_o = \frac{\mathbf{V}}{\mathbf{Z}} = \frac{4\angle 0°}{1.6 + j4} = \frac{4\angle 0°}{4.494\angle 69.14°} = 0.89\angle -69.14°$$

Hence,

$$i_o(t) = \mathbf{890\cos(5t - 69.14°)\text{ mA}}$$

(c) For $\omega = 10$,

$$1\text{ H} \longrightarrow j\omega L = j(10)(1) = j10$$

$$0.05\text{ F} \longrightarrow \frac{1}{j\omega C} = \frac{1}{j(10)(0.05)} = -j2$$

$$\mathbf{Z} = j10 + 2 \,||\, (-j2) = j10 + \frac{-j4}{2 - j2} = 1 + j9$$

$$\mathbf{I}_o = \frac{\mathbf{V}}{\mathbf{Z}} = \frac{4\angle 0°}{1 + j9} = \frac{4\angle 0°}{9.055\angle 83.66°} = 0.4417\angle -83.66°$$

Hence,

$$i_o(t) = \mathbf{441.7\cos(10t - 83.66°)\text{ mA}}$$

www.konkur.in

Chapter 9, Solution 41.

$$\omega = 1,$$

$$1\text{ H} \longrightarrow j\omega L = j(1)(1) = j$$

$$1\text{ F} \longrightarrow \frac{1}{j\omega C} = \frac{1}{j(1)(1)} = -j$$

$$\mathbf{Z} = 1 + (1+j) \,||\, (-j) = 1 + \frac{-j+1}{1} = 2 - j$$

$$\mathbf{I} = \frac{\mathbf{V}_s}{\mathbf{Z}} = \frac{10}{2-j}, \qquad \mathbf{I}_c = (1+j)\mathbf{I}$$

$$\mathbf{V} = (-j)(1+j)\mathbf{I} = (1-j)\mathbf{I} = \frac{(1-j)(10)}{2-j} = 6.325\angle -18.43°$$

Thus,

$$v(t) = \mathbf{6.325\cos(t - 18.43°)\ V}$$

www.konkur.in

Chapter 9, Solution 42.

$$\omega = 200$$

$$50\ \mu F \longrightarrow \frac{1}{j\omega C} = \frac{1}{j(200)(50\times 10^{-6})} = -j100$$

$$0.1\ H \longrightarrow j\omega L = j(200)(0.1) = j20$$

$$50 \parallel -j100 = \frac{(50)(-j100)}{50 - j100} = \frac{-j100}{1-j2} = 40 - j20$$

$$\mathbf{V}_o = \frac{j20}{j20 + 30 + 40 - j20}(60\angle 0°) = \frac{j20}{70}(60\angle 0°) = 17.14\angle 90°$$

Thus,

$$v_o(t) = \mathbf{17.14\ sin(200t + 90°)\ V}$$

or

$$v_o(t) = \mathbf{17.14\ cos(200t)\ V}$$

www.konkur.in

Chapter 9, Solution 43.

$$Z_{in} = 50 + j80 // (100 - j40) = 50 + \frac{j80(100 - j40)}{100 + j40} = 105.71 + j57.93$$

$$I_o = \frac{60 < 0^o}{Z_{in}} = 0.4377 - 0.2411 = \underline{0.4997 < -28.85^o \text{ A}} = \mathbf{499.7\angle -28.85^\circ \text{ mA}}$$

www.konkur.in

Chapter 9, Solution 44.

$\omega = 200$

$$10 \text{ mH} \longrightarrow j\omega L = j(200)(10\times10^{-3}) = j2$$

$$5 \text{ mF} \longrightarrow \frac{1}{j\omega C} = \frac{1}{j(200)(5\times10^{-3})} = -j$$

$$\mathbf{Y} = \frac{1}{4} + \frac{1}{j2} + \frac{1}{3-j} = 0.25 - j0.5 + \frac{3+j}{10} = 0.55 - j0.4$$

$$\mathbf{Z} = \frac{1}{\mathbf{Y}} = \frac{1}{0.55 - j0.4} = 1.1892 + j0.865$$

$$\mathbf{I} = \frac{6\angle 0°}{5+\mathbf{Z}} = \frac{6\angle 0°}{6.1892 + j0.865} = 0.96\angle -7.956°$$

Thus,

$$i(t) = \mathbf{960\cos(200t - 7.956°)\ mA}$$

www.konkur.in

Chapter 9, Solution 45.

We obtain I_o by applying the principle of current division twice.

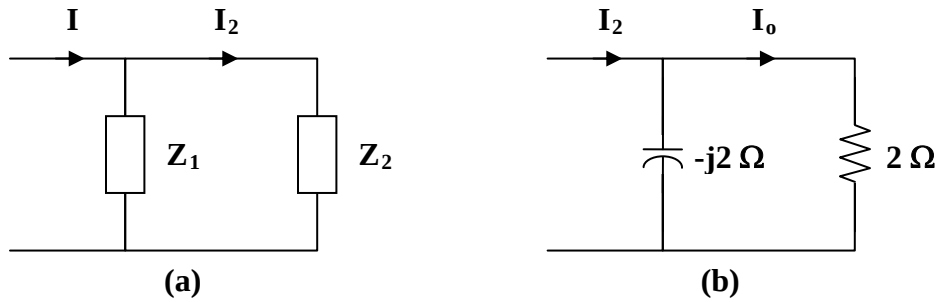

$$\mathbf{Z}_1 = -j2\,, \qquad \mathbf{Z}_2 = j4 + (-j2) \,||\, 2 = j4 + \frac{-j4}{2-j2} = 1 + j3$$

$$\mathbf{I}_2 = \frac{\mathbf{Z}_1}{\mathbf{Z}_1 + \mathbf{Z}_2}\mathbf{I} = \frac{-j2}{-j2+1+j3}(5\angle 0°) = \frac{-j10}{1+j}$$

$$\mathbf{I}_o = \frac{-j2}{2-j2}\mathbf{I}_2 = \left(\frac{-j}{1-j}\right)\left(\frac{-j10}{1+j}\right) = \frac{-10}{1+1} = \mathbf{-5\ A}$$

www.konkur.in

Chapter 9, Solution 46.

$$i_s = 5\cos(10t + 40°) \longrightarrow \mathbf{I}_s = 5\angle 40°$$

$$0.1\text{ F} \longrightarrow \frac{1}{j\omega C} = \frac{1}{j(10)(0.1)} = -j$$

$$0.2\text{ H} \longrightarrow j\omega L = j(10)(0.2) = j2$$

Let $\mathbf{Z}_1 = 4 \,||\, j2 = \dfrac{j8}{4 + j2} = 0.8 + j1.6$, $\mathbf{Z}_2 = 3 - j$

$$\mathbf{I}_o = \frac{\mathbf{Z}_1}{\mathbf{Z}_1 + \mathbf{Z}_2}\mathbf{I}_s = \frac{0.8 + j1.6}{3.8 + j0.6}(5\angle 40°)$$

$$\mathbf{I}_o = \frac{(1.789\angle 63.43°)(5\angle 40°)}{3.847\angle 8.97°} = 2.325\angle 94.46°$$

Thus,

$$i_o(t) = \mathbf{2.325\cos(10t + 94.46°)\ A}$$

www.konkur.in

Chapter 9, Solution 47.

First, we convert the circuit into the frequency domain.

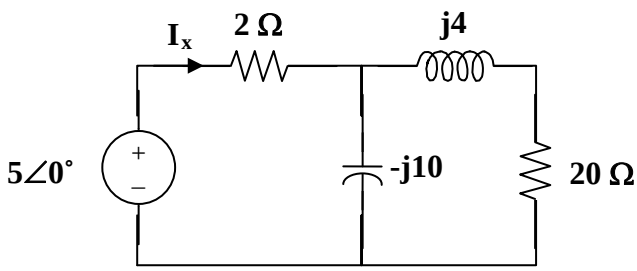

$$I_X = \frac{5}{2 + \dfrac{-j10(20+j4)}{-j10+20+j4}} = \frac{5}{2+4.588-j8.626} = \frac{5}{10.854\angle -52.63^\circ} = 0.4607\angle 52.63^\circ$$

$i_s(t)$ = **460.7cos(2000t +52.63˚) mA**

www.konkur.in

Chapter 9, Solution 48.

Converting the circuit to the frequency domain, we get:

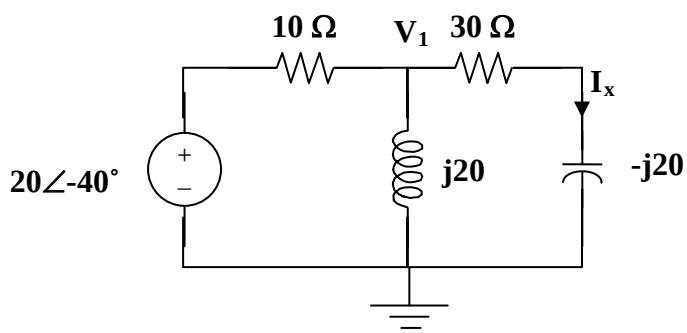

We can solve this using nodal analysis.

$$\frac{V_1 - 20\angle -40^\circ}{10} + \frac{V_1 - 0}{j20} + \frac{V_1 - 0}{30 - j20} = 0$$

$$V_1(0.1 - j0.05 + 0.02307 + j0.01538) = 2\angle -40^\circ$$

$$V_1 = \frac{2\angle 40^\circ}{0.12307 - j0.03462} = 15.643\angle -24.29^\circ$$

$$I_x = \frac{15.643\angle -24.29^\circ}{30 - j20} = 0.4338\angle 9.4^\circ$$

$$i_x = \underline{0.4338\sin(100t + 9.4^\circ)\ A}$$

www.konkur.in

Chapter 9, Solution 49.

$$\mathbf{Z}_T = 2 + j2 \,||\, (1-j) = 2 + \frac{(j2)(1-j)}{1+j} = 4$$

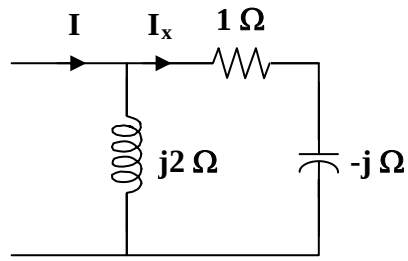

$$\mathbf{I}_x = \frac{j2}{j2+1-j}\mathbf{I} = \frac{j2}{1+j}\mathbf{I}, \qquad \text{where } \mathbf{I}_x = 0.5\angle 0° = \frac{1}{2}$$

$$\mathbf{I} = \frac{1+j}{j2}\mathbf{I}_x = \frac{1+j}{j4}$$

$$\mathbf{V}_s = \mathbf{I}\,\mathbf{Z}_T = \frac{1+j}{j4}(4) = \frac{1+j}{j} = 1 - j = 1.414\angle -45°$$

$$v_s(t) = \mathbf{1.4142\ sin(200t - 45°)\ V}$$

www.konkur.in

Chapter 9, Solution 50.

Since ω = 100, the inductor = j100x0.1 = j10 Ω and the capacitor = 1/(j100x10^{-3}) = -j10Ω.

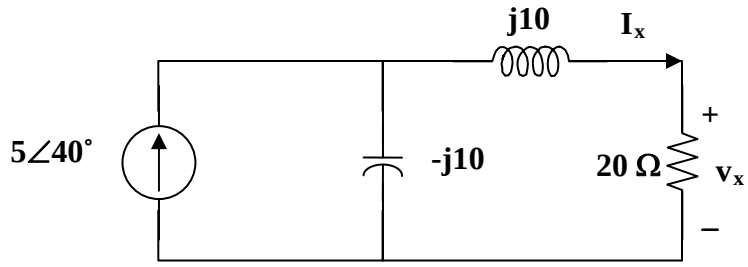

Using the current dividing rule:

$$I_x = \frac{-j10}{-j10+20+j10}5\angle 40° = -j2.5\angle 40° = 2.5\angle -50°$$

$$V_x = 20I_x = 50\angle -50°$$

$v_x(t)$ = **50cos(100t–50°) V**

www.konkur.in

Chapter 9, Solution 51.

$$0.1\text{ F} \longrightarrow \frac{1}{j\omega C} = \frac{1}{j(2)(0.1)} = -j5$$

$$0.5\text{ H} \longrightarrow j\omega L = j(2)(0.5) = j$$

The current **I** through the 2-Ω resistor is

$$\mathbf{I} = \frac{1}{1 - j5 + j + 2}\mathbf{I}_s = \frac{\mathbf{I}_s}{3 - j4}, \qquad \text{where } \mathbf{I} = \frac{10}{2}\angle 0° = 5$$

$$\mathbf{I}_S = (5)(3 - j4) = 25\angle -53.13°$$

Therefore,

$$i_s(t) = \mathbf{25\cos(2t - 53.13°)\ A}$$

www.konkur.in

Chapter 9, Solution 52.

We begin by simplifying the circuit. First we replace the parallel inductor and resistor with their series equivalent.

$$5 \parallel j5 = \frac{j25}{5+j5} = \frac{j5}{1+j} = 2.5 + j2.5$$

Next let $\mathbf{Z}_1 = 10$, and $\mathbf{Z}_2 = -j5 + 2.5 + j2.5 = 2.5 - j2.5$.

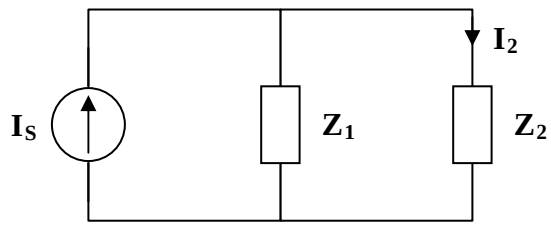

By current division $\mathbf{I}_2 = \dfrac{\mathbf{Z}_1}{\mathbf{Z}_1 + \mathbf{Z}_2}\mathbf{I}_s = \dfrac{10}{12.5 - j2.5}\mathbf{I}_s = \dfrac{4}{5-j}\mathbf{I}_s$.

Since $\mathbf{V}_o = \mathbf{I}_2(2.5 + j2.5)$ we can now find $\mathbf{I_s}$.

$$8\angle 30° = \left(\frac{4}{5-j}\right)\mathbf{I}_s(2.5)(1+j) = \frac{10(1+j)}{5-j}\mathbf{I}_s$$

$$\mathbf{I}_s = \frac{(8\angle 30°)(5-j)}{10(1+j)} = \mathbf{2.884\angle -26.31°\ A}.$$

www.konkur.in

Chapter 9, Solution 53.

Convert the delta to wye subnetwork as shown below.

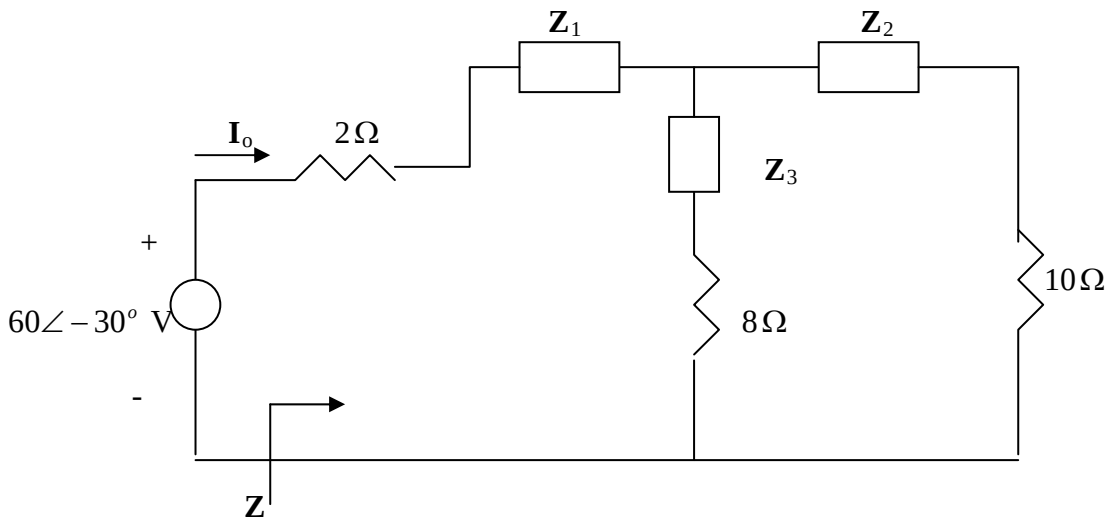

$$Z_1 = \frac{-j2x4}{4+j4} = \frac{8\angle -90°}{5.6569\angle 45°} = -1 - j1, \qquad Z_2 = \frac{j6x4}{4+j4} = 3 + j3,$$

$$Z_3 = \frac{12}{4+j4} = 1.5 - j1.5$$

$$(Z_3 + 8)//(Z_2 + 10) = (9.5 - j1.5)//(13 + j3) = 5.691\angle 0.21° = 5.691 + j0.02086$$

$$Z = 2 + Z_1 + 5.691 + j0.02086 = 6.691 - j0.9791$$

$$\boldsymbol{I_o = \frac{60\angle -30^o}{Z} = \frac{60\angle -30^o}{6.7623\angle -8.33^o} = \underline{8.873\angle -21.67^o \ \ A}}$$

www.konkur.in

Chapter 9, Solution 54.

Since the left portion of the circuit is twice as large as the right portion, the equivalent circuit is shown below.

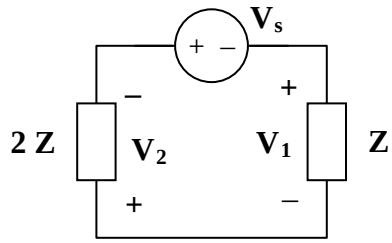

$$\mathbf{V}_1 = \mathbf{I}_o(1-j) = 2(1-j)$$
$$\mathbf{V}_2 = 2\mathbf{V}_1 = 4(1-j)$$
$$\mathbf{V_2} + \mathbf{V_s} + \mathbf{V_1} = 0 \text{ or}$$
$$\mathbf{V}_S = -\mathbf{V}_1 - \mathbf{V}_2 = -6(1-j) = (6\angle 180°)(1.4142\angle -45°)$$

$$\mathbf{V}_s = \mathbf{8.485\angle 135°\ V}$$

www.konkur.in

Chapter 9, Solution 55.

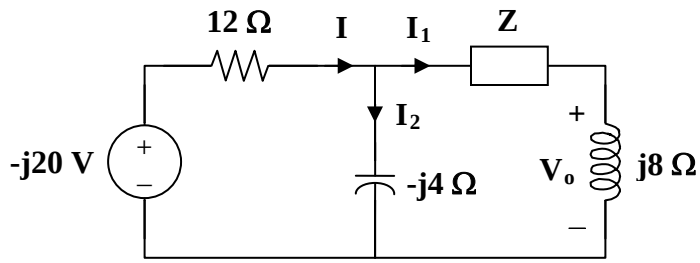

$$\mathbf{I}_1 = \frac{\mathbf{V}_o}{j8} = \frac{4}{j8} = -j0.5$$

$$\mathbf{I}_2 = \frac{\mathbf{I}_1(\mathbf{Z} + j8)}{-j4} = \frac{(-j0.5)(\mathbf{Z} + j8)}{-j4} = \frac{\mathbf{Z}}{8} + j$$

$$\mathbf{I} = \mathbf{I}_1 + \mathbf{I}_2 = -j0.5 + \frac{\mathbf{Z}}{8} + j = \frac{\mathbf{Z}}{8} + j0.5$$

$$-j20 = 12\mathbf{I} + \mathbf{I}_1(\mathbf{Z} + j8)$$

$$-j20 = 12\left(\frac{\mathbf{Z}}{8} + \frac{j}{2}\right) + \frac{-j}{2}(\mathbf{Z} + j8)$$

$$-4 - j26 = \mathbf{Z}\left(\frac{3}{2} - j\frac{1}{2}\right)$$

$$\mathbf{Z} = \frac{-4 - j26}{\frac{3}{2} - j\frac{1}{2}} = \frac{26.31\angle 261.25°}{1.5811\angle -18.43°} = 16.64\angle 279.68°$$

$$\mathbf{Z} = (2.798 - j16.403)\ \Omega$$

www.konkur.in

Chapter 9, Solution 56.

$$50\mu F \longrightarrow \frac{1}{j\omega C} = \frac{1}{j377x50x10^{-6}} = -j53.05$$

$$60mH \longrightarrow j\omega L = j377x60x10^{-3} = j22.62$$

$$Z_{in} = 12 - j53.05 + j22.62 // 40 = \underline{21.692 - j35.91\ \Omega}$$

www.konkur.in

Chapter 9, Solution 57.

$$2\text{H} \longrightarrow j\omega L = j2$$

$$1\text{F} \longrightarrow \frac{1}{j\omega C} = -j$$

$$Z = 1 + j2 // (2 - j) = 1 + \frac{j2(2 - j)}{j2 + 2 - j} = 2.6 + j1.2$$

$$\boldsymbol{Y = 1/Z = \underline{0.3171 - j0.1463 \text{ S}}}$$

www.konkur.in

Chapter 9, Solution 58.

Using Fig. 9.65, design a problem to help other students to better understand impedance combinations.

Although there are many ways to work this problem, this is an example based on the same kind of problem asked in the third edition.

Problem

At $\omega = 50$ rad/s, determine $\mathbf{Z}_{in}$ for each of the circuits in Fig. 9.65.

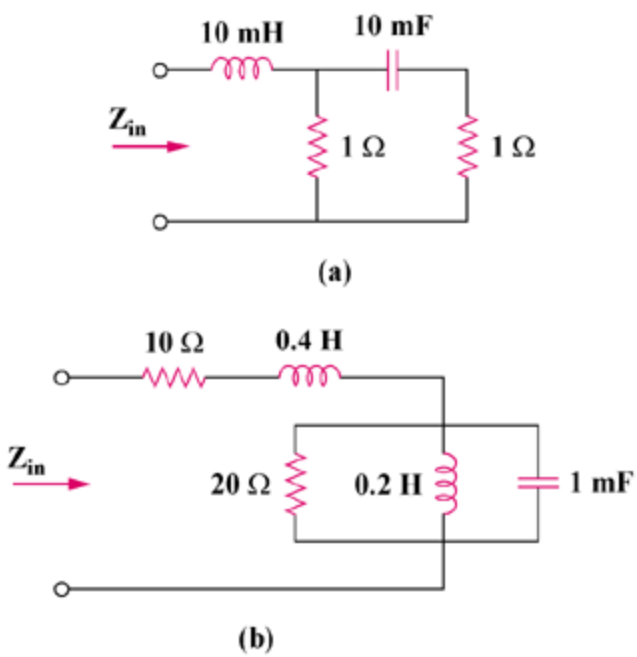

Figure 9.65

Solution

(a) $10 \text{ mF} \longrightarrow \dfrac{1}{j\omega C} = \dfrac{1}{j(50)(10\times10^{-3})} = -j2$

$10 \text{ mH} \longrightarrow j\omega L = j(50)(10\times10^{-3}) = j0.5$

$$\mathbf{Z}_{in} = j0.5 + 1 \,||\, (1 - j2)$$

$$\mathbf{Z}_{in} = j0.5 + \frac{1 - j2}{2 - j2}$$

$$\mathbf{Z}_{in} = j0.5 + 0.25(3 - j)$$

$$\mathbf{Z}_{in} = \mathbf{0.75 + j0.25\ \Omega}$$

www.konkur.in

(b) $0.4\text{ H} \longrightarrow j\omega L = j(50)(0.4) = j20$

$0.2\text{ H} \longrightarrow j\omega L = j(50)(0.2) = j10$

$1\text{ mF} \longrightarrow \dfrac{1}{j\omega C} = \dfrac{1}{j(50)(1\times 10^{-3})} = -j20$

For the parallel elements,

$$\frac{1}{\mathbf{Z}_p} = \frac{1}{20} + \frac{1}{j10} + \frac{1}{-j20}$$

$$\mathbf{Z}_p = 10 + j10$$

Then,

$$\mathbf{Z}_{in} = 10 + j20 + \mathbf{Z}_p = \mathbf{20 + j30\ \Omega}$$

www.konkur.in

Chapter 9, Solution 59.

$$0.25F \longrightarrow \frac{1}{j\omega C} = \frac{1}{j10x0.25} = -j0.4$$

$$0.5H \longrightarrow j\omega L = j10x0.5 = j5$$

$$Z_{in} = j5 \| (5 - j0.4) = \frac{(5\angle 90°)(5.016\angle -4.57°)}{6.794\angle 42.61°} = 3.691\angle 42.82°$$

= **(2.707+j2.509) Ω**.

www.konkur.in

Chapter 9, Solution 60.

$$Z = (25 + j15) + (20 - j50)//(30 + j10) = 25 + j15 + 26.097 - j5.122$$

$$Z = \mathbf{(51.1+j9.878)\ \Omega}$$

www.konkur.in

Chapter 9, Solution 61.

All of the impedances are in parallel.

$$\frac{1}{\mathbf{Z}_{eq}} = \frac{1}{1-j} + \frac{1}{1+j2} + \frac{1}{j5} + \frac{1}{1+j3}$$

$$\frac{1}{\mathbf{Z}_{eq}} = (0.5 + j0.5) + (0.2 - j0.4) + (-j0.2) + (0.1 - j0.3) = 0.8 - j0.4$$

$$\mathbf{Z}_{eq} = \frac{1}{0.8 - j0.4} = \mathbf{(1 + j0.5)\ \Omega}$$

www.konkur.in

Chapter 9, Solution 62.

$$2\text{ mH} \longrightarrow j\omega L = j(10\times10^{3})(2\times10^{-3}) = j20$$

$$1\,\mu\text{F} \longrightarrow \frac{1}{j\omega C} = \frac{1}{j(10\times10^{3})(1\times10^{-6})} = -j100$$

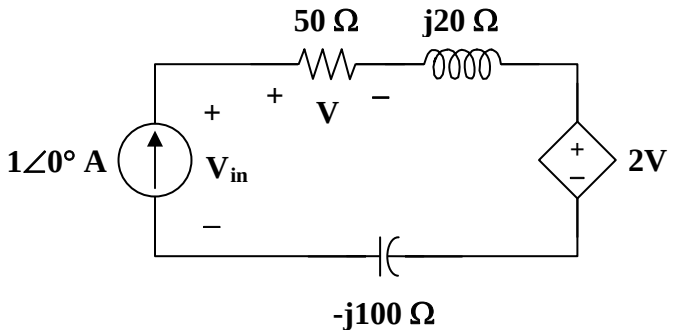

$$\mathbf{V} = (1\angle0°)(50) = 50$$

$$\mathbf{V}_{in} = (1\angle0°)(50 + j20 - j100) + (2)(50)$$
$$\mathbf{V}_{in} = 50 - j80 + 100 = 150 - j80$$

$$\mathbf{Z}_{in} = \frac{\mathbf{V}_{in}}{1\angle0°} = \mathbf{150 - j80\ \Omega}$$

www.konkur.in

Chapter 9, Solution 63.

First, replace the wye composed of the 20-ohm, 10-ohm, and j15-ohm impedances with the corresponding delta.

$$z_1 = \frac{200 + j150 + j300}{10} = 20 + j45$$

$$z_2 = \frac{200 + j450}{j15} = 30 - j13.333,\ z_3 = \frac{200 + j450}{20} = 10 + j22.5$$

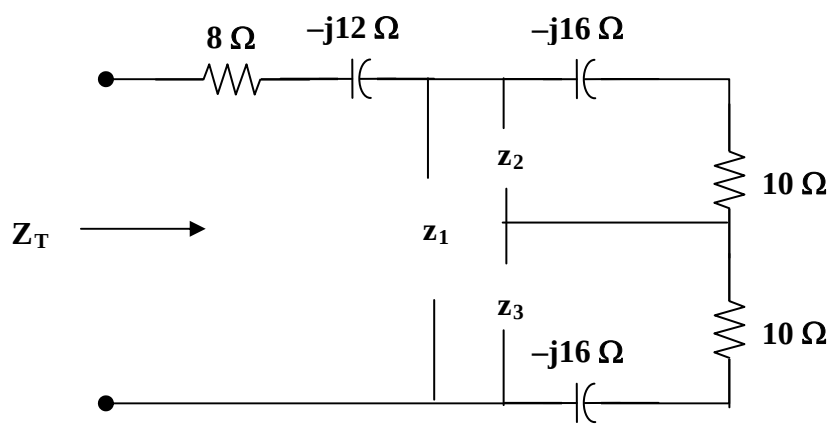

Now all we need to do is to combine impedances.

$$z_2 \| (10 - j16) = \frac{(30 - j13.333)(10 - j16)}{40 - j29.33} = 8.721 - j8.938$$

$$z_3 \| (10 - j16) = 21.70 - j3.821$$

$$Z_T = 8 - j12 + z_1 \| (8.721 - j8.938 + 21.7 - j3.821) = \underline{34.69 - j6.93\Omega}$$

www.konkur.in

Chapter 9, Solution 64.

$$Z_T = 4 + \frac{-j10(6+j8)}{6-j2} = \underline{19 - j5\Omega}$$

$$I = \frac{30\angle 90°}{Z_T} = -0.3866 + j1.4767 = \underline{1.527\angle 104.7° \text{ A}}$$

Z_T = **(19–j5) Ω**

I = **1.527∠104.7° A**

www.konkur.in

Chapter 9, Solution 65.

$$\mathbf{Z}_T = 2 + (4 - j6) \,||\, (3 + j4)$$

$$\mathbf{Z}_T = 2 + \frac{(4 - j6)(3 + j4)}{7 - j2}$$

$$\mathbf{Z}_T = \mathbf{6.83 + j1.094\ \Omega} = 6.917\angle 9.1°\ \Omega$$

$$\mathbf{I} = \frac{\mathbf{V}}{\mathbf{Z}_T} = \frac{120\angle 10°}{6.917\angle 9.1°} = \mathbf{17.35\angle 0.9°\ A}$$

www.konkur.in

Chapter 9, Solution 66.

$$\mathbf{Z}_T = (20 - j5) \,||\, (40 + j10) = \frac{(20 - j5)(40 + j10)}{60 + j5} = \frac{170}{145}(12 - j)$$

$$\mathbf{Z}_T = \mathbf{14.069 - j1.172\ \Omega} = 14.118\angle\text{-}4.76°$$

$$\mathbf{I} = \frac{\mathbf{V}}{\mathbf{Z}_T} = \frac{60\angle 90°}{14.118\angle -4.76°} = 4.25\angle 94.76°$$

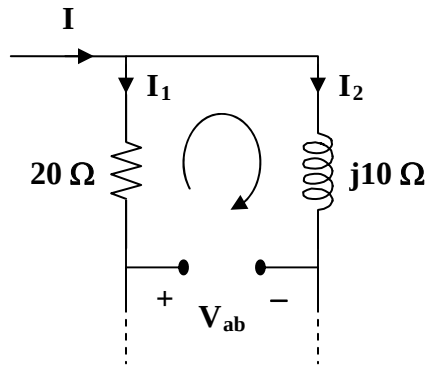

$$\mathbf{I}_1 = \frac{40 + j10}{60 + j5}\mathbf{I} = \frac{8 + j2}{12 + j}\mathbf{I}$$

$$\mathbf{I}_2 = \frac{20 - j5}{60 + j5}\mathbf{I} = \frac{4 - j}{12 + j}\mathbf{I}$$

$$\mathbf{V}_{ab} = -20\mathbf{I}_1 + j10\mathbf{I}_2$$

$$\mathbf{V}_{ab} = \frac{-(160 + j40)}{12 + j}\mathbf{I} + \frac{10 + j40}{12 + j}\mathbf{I}$$

$$\mathbf{V}_{ab} = \frac{-150}{12 + j}\mathbf{I} = \frac{(-12 + j)(150)}{145}\mathbf{I}$$

$$\mathbf{V}_{ab} = (12.457\angle 175.24°)(4.25\angle 97.76°)$$

$$\mathbf{V}_{ab} = \mathbf{52.94\angle 273°\ V}$$

www.konkur.in

Chapter 9, Solution 67.

(a) 20 mH $\longrightarrow$ $j\omega L = j(10^3)(20\times10^{-3}) = j20$

12.5 μF $\longrightarrow$ $\dfrac{1}{j\omega C} = \dfrac{1}{j(10^3)(12.5\times10^{-6})} = -j80$

$$\mathbf{Z}_{in} = 60 + j20 \,||\, (60 - j80)$$

$$\mathbf{Z}_{in} = 60 + \frac{(j20)(60 - j80)}{60 - j60}$$

$$\mathbf{Z}_{in} = 63.33 + j23.33 = 67.494\angle 20.22°$$

$$\mathbf{Y}_{in} = \frac{1}{\mathbf{Z}_{in}} = \mathbf{14.8\angle\text{-}20.22°\ mS}$$

(b) 10 mH $\longrightarrow$ $j\omega L = j(10^3)(10\times10^{-3}) = j10$

20 μF $\longrightarrow$ $\dfrac{1}{j\omega C} = \dfrac{1}{j(10^3)(20\times10^{-6})} = -j50$

$30 \,||\, 60 = 20$

$$\mathbf{Z}_{in} = -j50 + 20 \,||\, (40 + j10)$$

$$\mathbf{Z}_{in} = -j50 + \frac{(20)(40 + j10)}{60 + j10} = -j50 + 20(41.231\angle 14.036°)/(60.828\angle 9.462°)$$

$$= -j50 + (13.5566\angle 4.574° = -j50 + 13.51342 + j1.08109$$

$$= 13.51342 - j48.9189 = 50.751\angle -74.56°$$

$$\mathbf{Z}_{in} = 13.5 - j48.92 = 50.75\angle -74.56°$$

$$\mathbf{Y}_{in} = \frac{1}{\mathbf{Z}_{in}} = \mathbf{19.704\angle 74.56°\ mS} = 5.246 + j18.993 \text{ mS}$$

www.konkur.in

Chapter 9, Solution 68.

$$\mathbf{Y}_{eq} = \frac{1}{5 - j2} + \frac{1}{3 + j} + \frac{1}{-j4}$$

$$\mathbf{Y}_{eq} = (0.1724 + j0.069) + (0.3 - j0.1) + (j0.25)$$

$$\mathbf{Y}_{eq} = \mathbf{(472.4 + j219)\ mS}$$

www.konkur.in

Chapter 9, Solution 69.

$$\frac{1}{\mathbf{Y}_o} = \frac{1}{4} + \frac{1}{-j2} = \frac{1}{4}(1 + j2)$$

$$\mathbf{Y}_o = \frac{4}{1 + j2} = \frac{(4)(1 - j2)}{5} = 0.8 - j1.6$$

$$\mathbf{Y}_o + j = 0.8 - j0.6$$

$$\frac{1}{\mathbf{Y}_o'} = \frac{1}{1} + \frac{1}{-j3} + \frac{1}{0.8 - j0.6} = (1) + (j0.333) + (0.8 + j0.6)$$

$$\frac{1}{\mathbf{Y}_o'} = 1.8 + j0.933 = 2.028\angle 27.41°$$

$$\mathbf{Y}_o' = 0.4932\angle -27.41° = 0.4378 - j0.2271$$

$$\mathbf{Y}_o' + j5 = 0.4378 + j4.773$$

$$\frac{1}{\mathbf{Y}_{eq}} = \frac{1}{2} + \frac{1}{0.4378 + j4.773} = 0.5 + \frac{0.4378 - j4.773}{22.97}$$

$$\frac{1}{\mathbf{Y}_{eq}} = 0.5191 - j0.2078$$

$$\mathbf{Y}_{eq} = \frac{0.5191 - j0.2078}{0.3126} = \mathbf{(1.661 + j0.6647)\ S}$$

www.konkur.in

Chapter 9, Solution 70.

Make a delta-to-wye transformation as shown in the figure below.

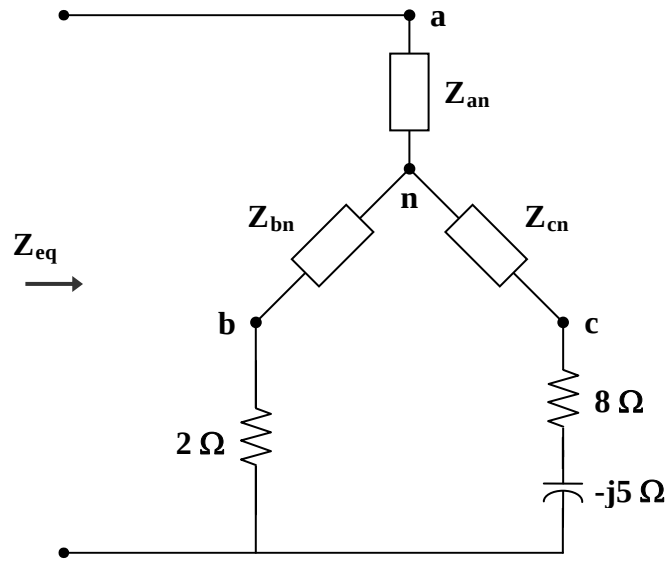

$$\mathbf{Z}_{an} = \frac{(-j10)(10+j15)}{5-j10+10+j15} = \frac{(10)(15-j10)}{15+j5} = 7-j9$$

$$\mathbf{Z}_{bn} = \frac{(5)(10+j15)}{15+j5} = 4.5+j3.5$$

$$\mathbf{Z}_{cn} = \frac{(5)(-j10)}{15+j5} = -1-j3$$

$$\mathbf{Z}_{eq} = \mathbf{Z}_{an} + (\mathbf{Z}_{bn}+2) \,||\, (\mathbf{Z}_{cn}+8-j5)$$

$$\mathbf{Z}_{eq} = 7-j9+(6.5+j3.5) \,||\, (7-j8)$$

$$\mathbf{Z}_{eq} = 7-j9+\frac{(6.5+j3.5)(7-j8)}{13.5-j4.5}$$

$$\mathbf{Z}_{eq} = 7-j9+5.511-j0.2$$

$$\mathbf{Z}_{eq} = 12.51-j9.2 = \mathbf{15.53\angle -36.33^\circ\ \Omega}$$

www.konkur.in

Chapter 9, Solution 71.

We apply a wye-to-delta transformation.

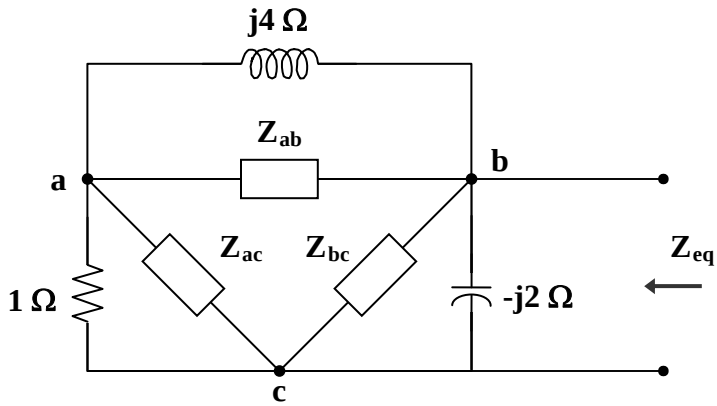

$$\mathbf{Z}_{ab} = \frac{2 - j2 + j4}{j2} = \frac{2 + j2}{j2} = 1 - j$$

$$\mathbf{Z}_{ac} = \frac{2 + j2}{2} = 1 + j$$

$$\mathbf{Z}_{bc} = \frac{2 + j2}{-j} = -2 + j2$$

$$j4 \,||\, \mathbf{Z}_{ab} = j4 \,||\, (1 - j) = \frac{(j4)(1 - j)}{1 + j3} = 1.6 - j0.8$$

$$1 \,||\, \mathbf{Z}_{ac} = 1 \,||\, (1 + j) = \frac{(1)(1 + j)}{2 + j} = 0.6 + j0.2$$

$$j4 \,||\, \mathbf{Z}_{ab} + 1 \,||\, \mathbf{Z}_{ac} = 2.2 - j0.6$$

$$\frac{1}{\mathbf{Z}_{eq}} = \frac{1}{-j2} + \frac{1}{-2 + j2} + \frac{1}{2.2 - j0.6}$$

$$= j0.5 - 0.25 - j0.25 + 0.4231 + j0.1154$$

$$= 0.173 + j0.3654 = 0.4043\angle 64.66°$$

$\mathbf{Z}_{eq} = 2.473\angle -64.66°\ \Omega$ = **(1.058 – j2.235) Ω**

www.konkur.in

Chapter 9, Solution 72.

Transform the delta connections to wye connections as shown below.

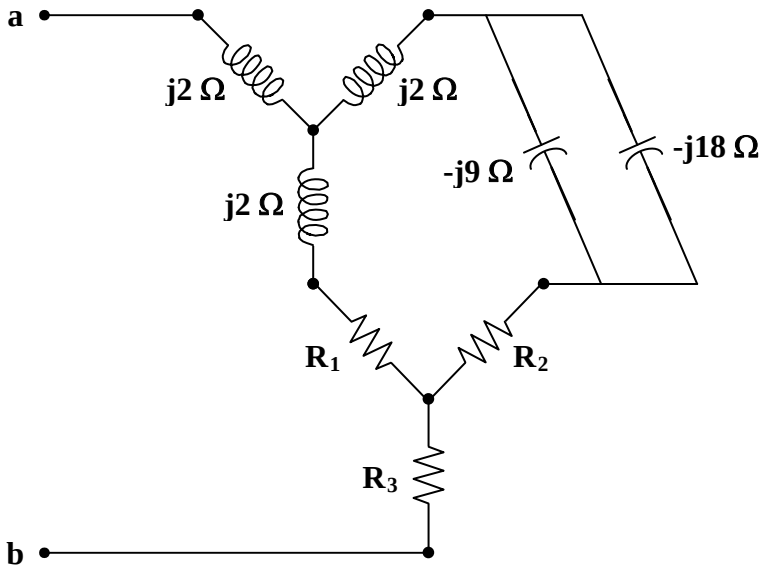

$$-j9 \parallel -j18 = -j6,$$

$$R_1 = \frac{(20)(20)}{20+20+10} = 8\,\Omega, \qquad R_2 = \frac{(20)(10)}{50} = 4\,\Omega,$$

$$R_3 = \frac{(20)(10)}{50} = 4\,\Omega$$

$$\mathbf{Z}_{ab} = j2 + (j2+8) \parallel (j2 - j6 + 4) + 4$$

$$\mathbf{Z}_{ab} = 4 + j2 + (8+j2) \parallel (4 - j4)$$

$$\mathbf{Z}_{ab} = 4 + j2 + \frac{(8+j2)(4-j4)}{12 - j2}$$

$$\mathbf{Z}_{ab} = 4 + j2 + 3.567 - j1.4054$$

$$\mathbf{Z}_{ab} = \mathbf{(7.567 + j0.5946)\ \Omega}$$

www.konkur.in

Chapter 9, Solution 73.

Transform the delta connection to a wye connection as in Fig. (a) and then transform the wye connection to a delta connection as in Fig. (b).

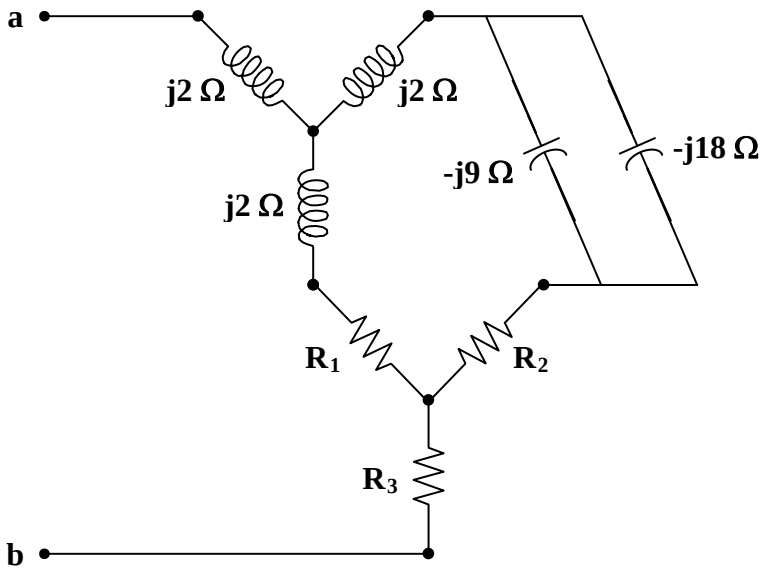

$$\mathbf{Z}_1 = \frac{(j8)(-j6)}{j8 + j8 - j6} = \frac{48}{j10} = -j4.8$$

$$\mathbf{Z}_2 = \mathbf{Z}_1 = -j4.8$$

$$\mathbf{Z}_3 = \frac{(j8)(j8)}{j10} = \frac{-64}{j10} = j6.4$$

$$(2 + \mathbf{Z}_1)(4 + \mathbf{Z}_2) + (4 + \mathbf{Z}_2)(\mathbf{Z}_3) + (2 + \mathbf{Z}_1)(\mathbf{Z}_3) =$$
$$(2 - j4.8)(4 - j4.8) + (4 - j4.8)(j6.4) + (2 - j4.8)(j6.4) = 46.4 + j9.6$$

$$\mathbf{Z}_a = \frac{46.4 + j9.6}{j6.4} = 1.5 - j7.25$$

$$\mathbf{Z}_b = \frac{46.4 + j9.6}{4 - j4.8} = 3.574 + j6.688$$

$$\mathbf{Z}_c = \frac{46.4 + j9.6}{2 - j4.8} = 1.727 + j8.945$$

$$j6 \,||\, \mathbf{Z}_b = \frac{(6\angle 90°)(7.583\angle 61.88°)}{3.574 + j12.688} = 07407 + j3.3716$$

$$-j4 \,||\, \mathbf{Z}_a = \frac{(-j4)(1.5 - j7.25)}{1.5 - j11.25} = 0.186 - j2.602$$

www.konkur.in

$$j12 \parallel \mathbf{Z}_c = \frac{(12\angle 90°)(9.11\angle 79.07°)}{1.727 + j20.945} = 0.5634 + j5.1693$$

$$\mathbf{Z}_{eq} = (j6 \parallel \mathbf{Z}_b) \parallel (-j4 \parallel \mathbf{Z}_a + j12 \parallel \mathbf{Z}_c)$$

$$\mathbf{Z}_{eq} = (0.7407 + j3.3716) \parallel (0.7494 + j2.5673)$$

$$\mathbf{Z}_{eq} = 1.508\angle 75.42° \ \Omega = \mathbf{(0.3796 + j1.46)\ \Omega}$$

www.konkur.in

Chapter 9, Solution 74.

One such RL circuit is shown below.

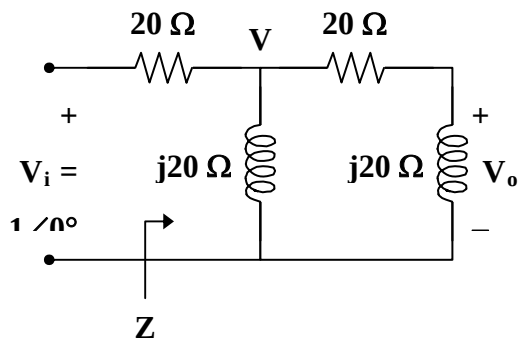

We now want to show that this circuit will produce a 90° phase shift.

$$\mathbf{Z} = j20 \,||\, (20 + j20) = \frac{(j20)(20 + j20)}{20 + j40} = \frac{-20 + j20}{1 + j2} = 4(1 + j3)$$

$$\mathbf{V} = \frac{\mathbf{Z}}{\mathbf{Z} + 20}\mathbf{V}_i = \frac{4 + j12}{24 + j12}(1\angle 0°) = \frac{1 + j3}{6 + j3} = \frac{1}{3}(1 + j)$$

$$\mathbf{V}_o = \frac{j20}{20 + j20}\mathbf{V} = \left(\frac{j}{1 + j}\right)\left(\frac{1}{3}(1 + j)\right) = \frac{j}{3} = 0.3333\angle 90°$$

This shows that the output leads the input by 90°.

www.konkur.in

Chapter 9, Solution 75.

Since $\cos(\omega t) = \sin(\omega t + 90°)$, we need a phase shift circuit that will cause the output to lead the input by 90°. **This is achieved by the RL circuit shown below, as explained in the previous problem**.

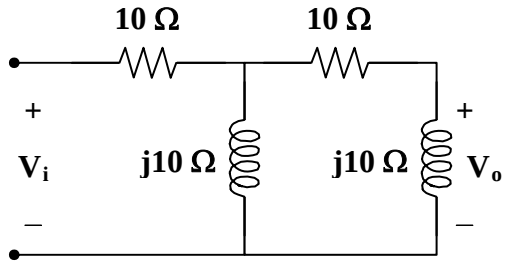

This can also be obtained by an RC circuit.

www.konkur.in

Chapter 9, Solution 76.

(a) $v_2 = 8\sin 5t = 8\cos(5t - 90^o)$

v_1 leads v_2 by 70°.

(b) $v_2 = 6\sin 2t = 6\cos(2t - 90^o)$

v_1 leads v_2 by 180°.

(c) $v_1 = -4\cos 10t = 4\cos(10t + 180^o)$

$v_2 = 15\sin 10t = 15\cos(10t - 90^o)$

v_1 leads v_2 by 270°.

www.konkur.in

Chapter 9, Solution 77.

(a) $$\mathbf{V}_o = \frac{-jX_c}{R - jX_c}\mathbf{V}_i$$

where $X_c = \frac{1}{\omega C} = \frac{1}{(2\pi)(2\times10^6)(20\times10^{-9})} = 3.979$

$$\frac{\mathbf{V}_o}{\mathbf{V}_i} = \frac{-j3.979}{5-j3.979} = \frac{3.979}{\sqrt{5^2+3.979^2}}\angle(-90° + \tan^{-1}(3.979/5))$$

$$\frac{\mathbf{V}_o}{\mathbf{V}_i} = \frac{3.979}{\sqrt{25+15.83}}\angle(-90° - 38.51°)$$

$$\frac{\mathbf{V}_o}{\mathbf{V}_i} = 0.6227\angle -51.49°$$

Therefore, the phase shift is **51.49° lagging**

(b) $$\theta = -45° = -90° + \tan^{-1}(X_c/R)$$

$$45° = \tan^{-1}(X_c/R) \longrightarrow R = X_c = \frac{1}{\omega C}$$

$$\omega = 2\pi f = \frac{1}{RC}$$

$$f = \frac{1}{2\pi RC} = \frac{1}{(2\pi)(5)(20\times10^{-9})} = \mathbf{1.5915\ MHz}$$

www.konkur.in

Chapter 9, Solution 78.

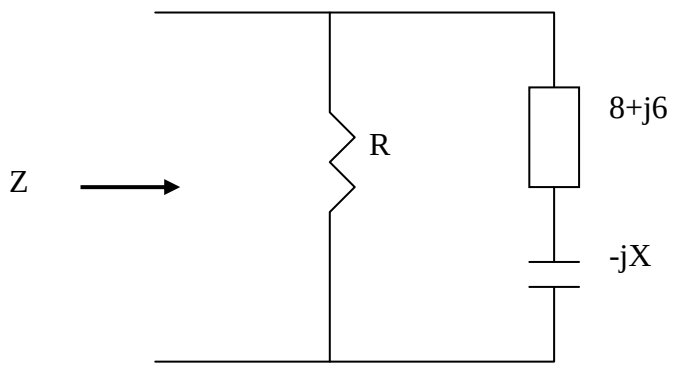

$$Z = R//[8 + j(6 - X)] = \frac{R[8 + j(6 - X)]}{R + 8 + j(6 - X)} = 5$$

i.e 8R + j6R – jXR = 5R + 40 + j30 –j5X

Equating real and imaginary parts:

8R = 5R + 40 which leads to **R=13.333Ω**
6R-XR =30-5X which leads to **X= 6 Ω**.

www.konkur.in

Chapter 9, Solution 79.

(a) Consider the circuit as shown.

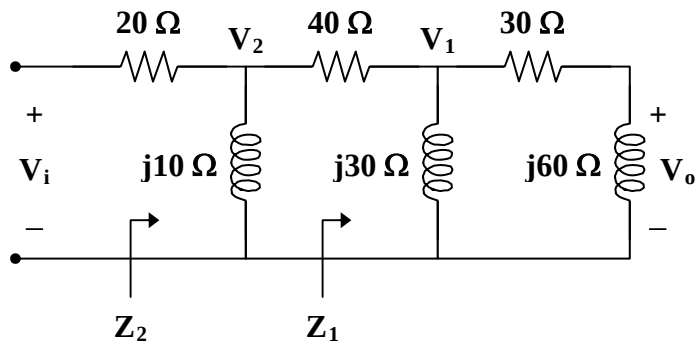

$$\mathbf{Z}_1 = \text{j}30 \,||\, (30 + \text{j}60) = \frac{(\text{j}30)(30 + \text{j}60)}{30 + \text{j}90} = 3 + \text{j}21$$

$$\mathbf{Z}_2 = \text{j}10 \,||\, (40 + \mathbf{Z}_1) = \frac{(\text{j}10)(43 + \text{j}21)}{43 + \text{j}31} = 1.535 + \text{j}8.896 = 9.028\angle 80.21°$$

Let $\mathbf{V}_\text{i} = 1\angle 0°$.

$$\mathbf{V}_2 = \frac{\mathbf{Z}_2}{\mathbf{Z}_2 + 20}\mathbf{V}_\text{i} = \frac{(9.028\angle 80.21°)(1\angle 0°)}{21.535 + \text{j}8.896}$$

$$\mathbf{V}_2 = 0.3875\angle 57.77°$$

$$\mathbf{V}_1 = \frac{\mathbf{Z}_1}{\mathbf{Z}_1 + 40}\mathbf{V}_2 = \frac{3 + \text{j}21}{43 + \text{j}21}\mathbf{V}_2 = \frac{(21.213\angle 81.87°)(0.3875\angle 57.77°)}{47.85\angle 26.03°}$$

$$\mathbf{V}_1 = 0.1718\angle 113.61°$$

$$\mathbf{V}_\text{o} = \frac{\text{j}60}{30 + \text{j}60}\mathbf{V}_1 = \frac{\text{j}2}{1 + \text{j}2}\mathbf{V}_1 = \frac{2}{5}(2 + \text{j})\mathbf{V}_1$$

$$\mathbf{V}_\text{o} = (0.8944\angle 26.56°)(0.1718\angle 113.6°)$$

$$\mathbf{V}_\text{o} = 0.1536\angle 140.2°$$

Therefore, the phase shift is **140.2°**

(b) The phase shift is **leading**.

(c) If $\mathbf{V}_\text{i} = 120\text{ V}$, then

$$\mathbf{V}_\text{o} = (120)(0.1536\angle 140.2°) = 18.43\angle 140.2°\text{ V}$$

and the magnitude is **18.43 V**.

www.konkur.in

www.konkur.in

Chapter 9, Solution 80.

$$200 \text{ mH} \longrightarrow j\omega L = j(2\pi)(60)(200\times10^{-3}) = j75.4\,\Omega$$

$$\mathbf{V}_o = \frac{j75.4}{R+50+j75.4}\mathbf{V}_i = \frac{j75.4}{R+50+j75.4}(120\angle0°)$$

(a) When $R = 100\,\Omega$,

$$\mathbf{V}_o = \frac{j75.4}{150+j75.4}(120\angle0°) = \frac{(75.4\angle90°)(120\angle0°)}{167.88\angle26.69°}$$

$$\mathbf{V}_o = \mathbf{53.89\angle63.31°\ V}$$

(b) When $R = 0\,\Omega$,

$$\mathbf{V}_o = \frac{j75.4}{50+j75.4}(120\angle0°) = \frac{(75.4\angle90°)(120\angle0°)}{90.47\angle56.45°}$$

$$\mathbf{V}_o = \mathbf{100\angle33.55°\ V}$$

(c) To produce a phase shift of 45°, the phase of $\mathbf{V}_o$ = 90° + 0° – α = 45°.
Hence, α = phase of (R + 50 + j75.4) = 45°.
For α to be 45°, R + 50 = 75.4
Therefore, R = **25.4 Ω**

www.konkur.in

Chapter 9, Solution 81.

Let $\mathbf{Z}_1 = R_1$, $\mathbf{Z}_2 = R_2 + \dfrac{1}{j\omega C_2}$, $\mathbf{Z}_3 = R_3$, and $\mathbf{Z}_x = R_x + \dfrac{1}{j\omega C_x}$.

$$\mathbf{Z}_x = \frac{\mathbf{Z}_3}{\mathbf{Z}_1}\mathbf{Z}_2$$

$$R_x + \frac{1}{j\omega C_x} = \frac{R_3}{R_1}\left(R_2 + \frac{1}{j\omega C_2}\right)$$

$$R_x = \frac{R_3}{R_1}R_2 = \frac{1200}{400}(600) = \mathbf{1.8\ k\Omega}$$

$$\frac{1}{C_x} = \left(\frac{R_3}{R_1}\right)\left(\frac{1}{C_2}\right) \longrightarrow C_x = \frac{R_1}{R_3}C_2 = \left(\frac{400}{1200}\right)(0.3\times 10^{-6}) = \mathbf{0.1\ \mu F}$$

www.konkur.in

Chapter 9, Solution 82.

$$C_x = \frac{R_1}{R_2} C_s = \left(\frac{100}{2000}\right)(40 \times 10^{-6}) = \mathbf{2\ \mu F}$$

www.konkur.in

Chapter 9, Solution 83.

$$L_x = \frac{R_2}{R_1} L_s = \left(\frac{500}{1200}\right)(250 \times 10^{-3}) = \mathbf{104.17\ mH}$$

www.konkur.in

Chapter 9, Solution 84.

Let $\mathbf{Z}_1 = R_1 \parallel \dfrac{1}{j\omega C_s}$, $\mathbf{Z}_2 = R_2$, $\mathbf{Z}_3 = R_3$, and $\mathbf{Z}_x = R_x + j\omega L_x$.

$$\mathbf{Z}_1 = \frac{\dfrac{R_1}{j\omega C_s}}{R_1 + \dfrac{1}{j\omega C_s}} = \frac{R_1}{j\omega R_1 C_s + 1}$$

Since $\mathbf{Z}_x = \dfrac{\mathbf{Z}_3}{\mathbf{Z}_1}\mathbf{Z}_2$,

$$R_x + j\omega L_x = R_2 R_3 \frac{j\omega R_1 C_s + 1}{R_1} = \frac{R_2 R_3}{R_1}(1 + j\omega R_1 C_s)$$

Equating the real and imaginary components,

$$\mathbf{R_x = \frac{R_2 R_3}{R_1}}$$

$\omega L_x = \dfrac{R_2 R_3}{R_1}(\omega R_1 C_s)$ implies that

$$\mathbf{L_x = R_2 R_3 C_s}$$

Given that $R_1 = 40\ \text{k}\Omega$, $R_2 = 1.6\ \text{k}\Omega$, $R_3 = 4\ \text{k}\Omega$, and $C_s = 0.45\ \mu\text{F}$

$$R_x = \frac{R_2 R_3}{R_1} = \frac{(1.6)(4)}{40}\ \text{k}\Omega = 0.16\ \text{k}\Omega = \mathbf{160\ \Omega}$$

$$L_x = R_2 R_3 C_s = (1.6)(4)(0.45) = \mathbf{2.88\ H}$$

www.konkur.in

Chapter 9, Solution 85.

Let $\mathbf{Z}_1 = R_1$, $\mathbf{Z}_2 = R_2 + \dfrac{1}{j\omega C_2}$, $\mathbf{Z}_3 = R_3$, and $\mathbf{Z}_4 = R_4 \parallel \dfrac{1}{j\omega C_4}$.

$$\mathbf{Z}_4 = \frac{R_4}{j\omega R_4 C_4 + 1} = \frac{-jR_4}{\omega R_4 C_4 - j}$$

Since $\mathbf{Z}_4 = \dfrac{\mathbf{Z}_3}{\mathbf{Z}_1}\mathbf{Z}_2 \longrightarrow \mathbf{Z}_1\mathbf{Z}_4 = \mathbf{Z}_2\mathbf{Z}_3$,

$$\frac{-jR_4R_1}{\omega R_4 C_4 - j} = R_3\left(R_2 - \frac{j}{\omega C_2}\right)$$

$$\frac{-jR_4R_1(\omega R_4 C_4 + j)}{\omega^2 R_4^2 C_4^2 + 1} = R_3R_2 - \frac{jR_3}{\omega C_2}$$

Equating the real and imaginary components,

$$\frac{R_1R_4}{\omega^2 R_4^2 C_4^2 + 1} = R_2R_3 \qquad (1)$$

$$\frac{\omega R_1 R_4^2 C_4}{\omega^2 R_4^2 C_4^2 + 1} = \frac{R_3}{\omega C_2} \qquad (2)$$

Dividing (1) by (2),

$$\frac{1}{\omega R_4 C_4} = \omega R_2 C_2$$

$$\omega^2 = \frac{1}{R_2C_2R_4C_4}$$

$$\omega = 2\pi f = \frac{1}{\sqrt{R_2C_2R_4C_4}}$$

$$\mathbf{f = \frac{1}{2\pi\sqrt{R_2R_4C_2C_4}}}$$

www.konkur.in

Chapter 9, Solution 86.

$$\mathbf{Y} = \frac{1}{240} + \frac{1}{j95} + \frac{1}{-j84}$$

$$\mathbf{Y} = 4.1667 \times 10^{-3} - j0.01053 + j0.0119$$

$$\mathbf{Z} = \frac{1}{\mathbf{Y}} = \frac{1000}{4.1667 + j1.37} = \frac{1000}{4.3861\angle 18.2°}$$

$$\mathbf{Z} = \mathbf{228\angle -18.2°\ \Omega}$$

www.konkur.in

Chapter 9, Solution 87.

$$\mathbf{Z}_1 = 50 + \frac{1}{j\omega C} = 50 + \frac{-j}{(2\pi)(2\times10^3)(2\times10^{-6})}$$
$$\mathbf{Z}_1 = 50 - j39.79$$

$$\mathbf{Z}_2 = 80 + j\omega L = 80 + j(2\pi)(2\times10^3)(10\times10^{-3})$$
$$\mathbf{Z}_2 = 80 + j125.66$$

$$\mathbf{Z}_3 = 100$$

$$\frac{1}{\mathbf{Z}} = \frac{1}{\mathbf{Z}_1} + \frac{1}{\mathbf{Z}_2} + \frac{1}{\mathbf{Z}_3}$$
$$\frac{1}{\mathbf{Z}} = \frac{1}{100} + \frac{1}{50 - j39.79} + \frac{1}{80 + j125.66}$$
$$\frac{1}{\mathbf{Z}} = 10^{-3}(10 + 12.24 + j9.745 + 3.605 - j5.663)$$
$$= (25.85 + j4.082)\times10^{-3}$$

$$= 26.17\times10^{-3}\angle 8.97°$$

$\mathbf{Z}$ = **38.21∠–8.97° Ω**

www.konkur.in

Chapter 9, Solution 88.

(a) $\mathbf{Z} = -j20 + j30 + 120 - j20$

$\mathbf{Z} = \mathbf{(120 - j10)\ \Omega}$

(b) If the frequency were halved, $\frac{1}{\omega C} = \frac{1}{2\pi f\ C}$ would cause the capacitive impedance to double, while $\omega L = 2\pi f\ L$ would cause the inductive impedance to halve. Thus,

$\mathbf{Z} = -j40 + j15 + 120 - j40$

$\mathbf{Z} = \mathbf{(120 - j65)\ \Omega}$

www.konkur.in

Chapter 9, Solution 89.

An industrial load is modeled as a series combination of an inductor and a resistance as shown in Fig. 9.89. Calculate the value of a capacitor C across the series combination so that the net impedance is resistive at a frequency of 2 kHz.

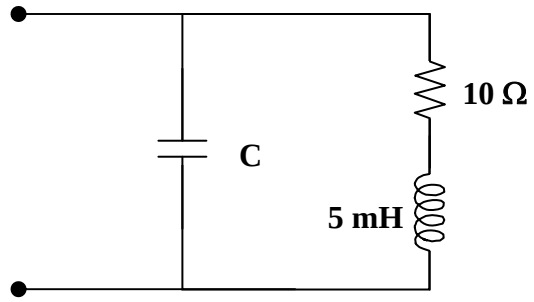

Figure 9.89
For Prob. 9.89.

Solution

Step 1.

There are different ways to solve this problem but perhaps the easiest way is to convert the series R L elements into their parallel equivalents. Then all you need to do is to make the inductance and capacitance cancel each other out to result in a purely resistive circuit.

$X_L = 2x10^3x5x10^{-3} = 10$ which leads to **Y** = 1/(10+j10) = 0.05–j0.05 or a 20Ω resistor in parallel with a j20Ω inductor. $X_c = 1/(2x10^3C)$ and the parallel combination of the capacitor and inductor is equal to,

$[(-jX_C)(j20)/(-jX_C+j20)]$.

Step 2.

Now we just need to set $X_C = 20 = 1/(2x10^3C)$ which will create an open circuit.

$$C = 1/(20x2x10^3) = \mathbf{25\ \mu F}.$$

www.konkur.in

Chapter 9, Solution 90.

Let $\mathbf{V}_s = 145\angle 0°$, $X = \omega L = (2\pi)(60)L = 377L$

$$\mathbf{I} = \frac{\mathbf{V}_s}{80 + R + jX} = \frac{145\angle 0°}{80 + R + jX}$$

$$\mathbf{V}_1 = 80\mathbf{I} = \frac{(80)(145)}{80 + R + jX}$$

$$50 = \left| \frac{(80)(145)}{80 + R + jX} \right| \qquad (1)$$

$$\mathbf{V}_o = (R + jX)\mathbf{I} = \frac{(R + jX)(145\angle 0°)}{80 + R + jX}$$

$$110 = \left| \frac{(R + jX)(145)}{80 + R + jX} \right| \qquad (2)$$

From (1) and (2),

$$\frac{50}{110} = \frac{80}{|R + jX|}$$

$$|R + jX| = (80)\left(\frac{11}{5}\right)$$

$$R^2 + X^2 = 30976 \qquad (3)$$

From (1),

$$|80 + R + jX| = \frac{(80)(145)}{50} = 232$$

$$6400 + 160R + R^2 + X^2 = 53824$$

$$160R + R^2 + X^2 = 47424 \qquad (4)$$

Subtracting (3) from (4),

$$160R = 16448 \longrightarrow R = \mathbf{102.8\ \Omega}$$

From (3),

$$X^2 = 30976 - 10568 = 20408$$

$$X = 142.86 = 377L \longrightarrow L = \mathbf{378.9\ mH}$$

www.konkur.in

Chapter 9, Solution 91.

$$\mathbf{Z}_{in} = \frac{1}{j\omega C} + R \parallel j\omega L$$

$$\mathbf{Z}_{in} = \frac{-j}{\omega C} + \frac{j\omega LR}{R + j\omega L}$$

$$= \frac{-j}{\omega C} + \frac{\omega^2 L^2 R + j\omega LR^2}{R^2 + \omega^2 L^2}$$

To have a resistive impedance, $\mathrm{Im}(\mathbf{Z}_{in}) = 0$.
Hence,

$$\frac{-1}{\omega C} + \frac{\omega LR^2}{R^2 + \omega^2 L^2} = 0$$

$$\frac{1}{\omega C} = \frac{\omega LR^2}{R^2 + \omega^2 L^2}$$

$$C = \frac{R^2 + \omega^2 L^2}{\omega^2 LR^2}$$

where $\omega = 2\pi f = 2\pi \times 10^7$

$$C = \frac{9 \times 10^4 + (4\pi^2 \times 10^{14})(400 \times 10^{-12})}{(4\pi^2 \times 10^{14})(20 \times 10^{-6})(9 \times 10^4)}$$

$$C = \frac{9 + 16\pi^2}{72\pi^2} \text{ nF}$$

C = **235 pF**

www.konkur.in

Chapter 9, Solution 92.

(a) $Z_o = \sqrt{\frac{Z}{Y}} = \sqrt{\frac{100\angle 75^o}{450\angle 48^o \, x10^{-6}}} = \underline{471.4\angle 13.5^o \, \Omega}$

(b) $\gamma = \sqrt{ZY} = \sqrt{100\angle 75^o \, x450\angle 48^o \, x10^{-6}} = \underline{212.1\angle 61.5^o} \, mS$

www.konkur.in

Chapter 9, Solution 93.

$$\mathbf{Z} = \mathbf{Z}_s + 2\mathbf{Z}_\ell + \mathbf{Z}_L$$
$$\mathbf{Z} = (1 + 0.8 + 23.2) + j(0.5 + 0.6 + 18.9)$$
$$\mathbf{Z} = 25 + j20$$

$$\mathbf{I}_L = \frac{\mathbf{V}_S}{\mathbf{Z}} = \frac{115\angle 0°}{32.02\angle 38.66°}$$

$$\mathbf{I}_L = \mathbf{3.592\angle -38.66°\ A}$$

www.konkur.in

Chapter 10, Solution 1.

We first determine the input impedance.

$$1H \longrightarrow j\omega L = j1x10 = j10$$

$$1F \longrightarrow 1/j\omega C = \frac{1}{j10x1} = -j0.1$$

$$Z_{in} = 1 + \left(\frac{1}{j10} + \frac{1}{-j0.1} + \frac{1}{1}\right)^{-1} = 1.0101 - j0.1 = 1.015 < -5.653^o$$

$$I = \frac{2 < 0^o}{1.015 < -5.653^o} = 1.9704 < 5.653^o$$

i(t) = **1.9704cos(10t+5.65˚) A**

www.konkur.in

Chapter 10, Solution 2.

Using Fig. 10.51, design a problem to help other students better understand nodal analysis.

Although there are many ways to work this problem, this is an example based on the same kind of problem asked in the third edition.

Problem

Solve for V_o in Fig. 10.51, using nodal analysis.

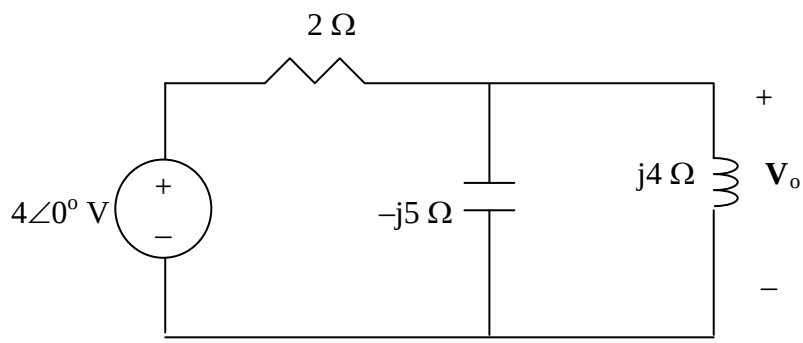

Figure 10.51 For Prob. 10.2.

Solution

Consider the circuit shown below.

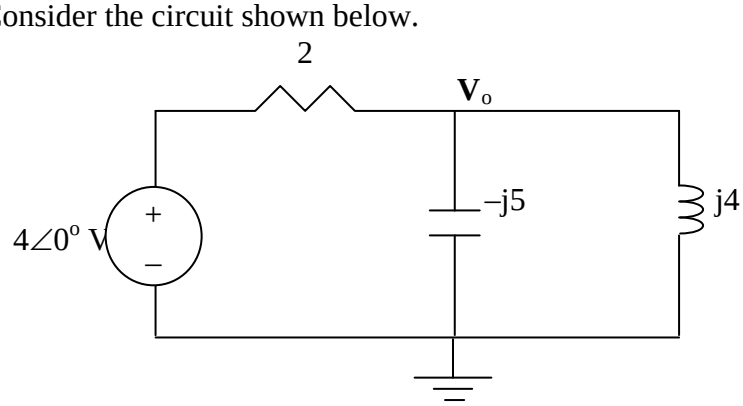

At the main node,

$$\frac{4-V_o}{2} = \frac{V_o}{-j5} + \frac{V_o}{j4} \longrightarrow 40 = V_o(10+j)$$

$$\mathbf{V_o} = 40/(10-j) = (40/10.05)\angle 5.71^\circ = \mathbf{3.98\angle 5.71^\circ\ V}$$

www.konkur.in

Chapter 10, Solution 3.

$$\omega = 4$$

$$2\cos(4t) \longrightarrow 2\angle 0^\circ$$

$$16\sin(4t) \longrightarrow 16\angle -90^\circ = -j16$$

$$2\text{ H} \longrightarrow j\omega L = j8$$

$$1/12\text{ F} \longrightarrow \frac{1}{j\omega C} = \frac{1}{j(4)(1/12)} = -j3$$

The circuit is shown below.

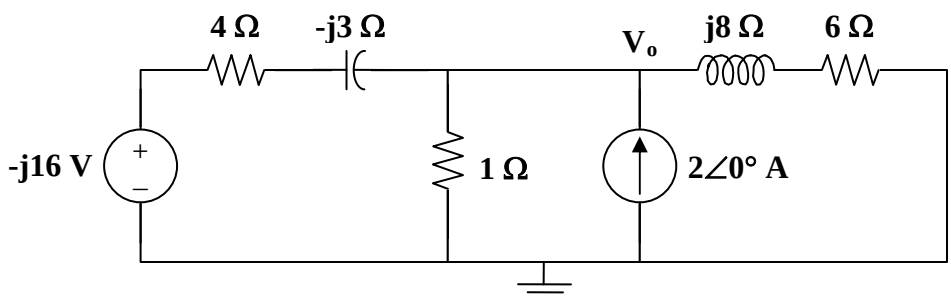

Applying nodal analysis,

$$\frac{-j16 - \mathbf{V}_o}{4 - j3} + 2 = \frac{\mathbf{V}_o}{1} + \frac{\mathbf{V}_o}{6 + j8}$$

$$\frac{-j16}{4 - j3} + 2 = \left(1 + \frac{1}{4 - j3} + \frac{1}{6 + j8}\right)\mathbf{V}_o$$

$$\mathbf{V}_o = \frac{3.92 - j2.56}{1.22 + j0.04} = \frac{4.682\angle -33.15^\circ}{1.2207\angle 1.88^\circ} = 3.835\angle -35.02^\circ$$

Therefore,

$$v_o(t) = \mathbf{3.835\cos(4t - 35.02^\circ)\ V}$$

www.konkur.in

Chapter 10, Solution 4.

Step 1. Convert the circuit into the frequency domain and solve for the node voltage, V_1, using analysis. The find the current $I_C = V_1/[1+(1/(j4x0.25)]$ which then produces $V_o = 1xI_C$. Finally, convert the capacitor voltage back into the time domain.

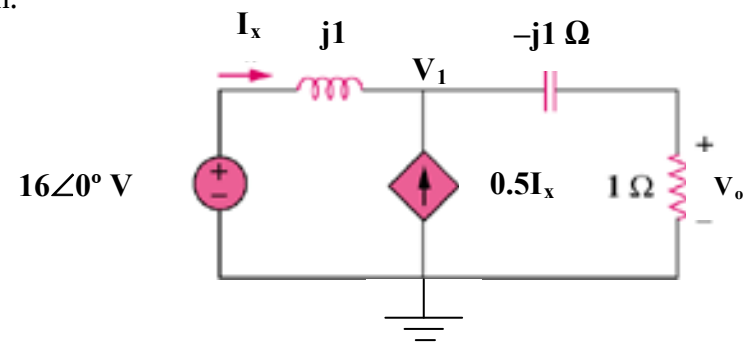

Note that we represented 16sin(4t–10º) volts by 16∠0º V. That will make our calculations easier and all we have to do is to offset our answer by a –10º.

Our node equation is $[(V_1–16)/j] – (0.5I_x) + [(V_1–0)/(1–j)] = 0$. We have two unknowns, therefore we need a constraint equation. $I_x = [(16–V_1)/j] = j(V_1–16)$. Once we have V_1, we can find $I_o = V_1 /(1–j)$ and $V_o = 1xI_o$.

Step 2. Now all we need to do is to solve our equations.

$[(V_1–16)/j] – [0.5j(V_1–16] + [(V_1–0)/(1–j)] = [–j–j0.5+0.5+j0.5]V_1 +j16+j8 = 0$ or

$[0.5–j]V_1 = –j24$ or $V_1 = j24/(–0.5+j) = (24\angle 90º)/(1.118\angle 116.57º)$
$= 21.47\angle –26.57º$ V.

Finally, $I_x = V_1/(1–j) = (21.47\angle –26.57º)\ (0.7071\angle 45º) = 15.181\angle 18.43º$ A and $V_o = 1xI_o = 15.181\angle 18.43º$ V or

$$v_o(t) = 15.181\sin(4t–10º+18.43º) = \mathbf{15.181\sin(4t–8.43º)\ volts}.$$

www.konkur.in

Chapter 10, Solution 5.

$$0.25H \longrightarrow j\omega L = j0.25x4x10^3 = j1000$$

$$2\mu F \longrightarrow 1/j\omega C = \frac{1}{j4x10^3 x2x10^{-6}} = -j125$$

Consider the circuit as shown below.

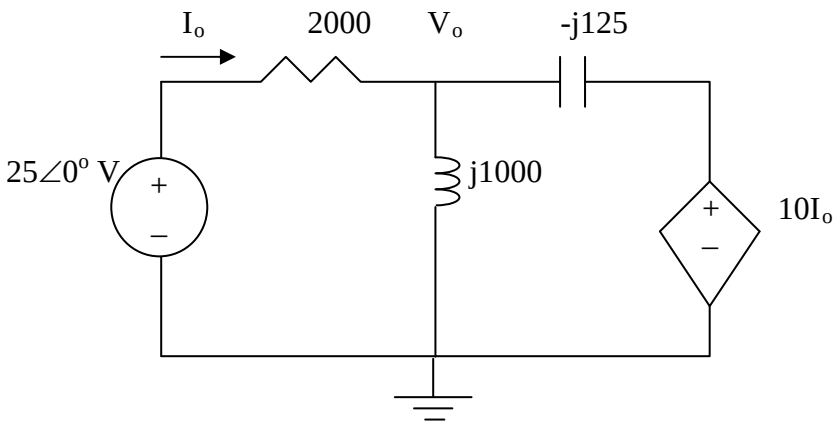

At node V_o,

$$\frac{V_o - 25}{2000} + \frac{V_o - 0}{j1000} + \frac{V_o - 10I_o}{-j125} = 0$$

$$V_o - 25 - j2V_o + j16V_o - j160I_o = 0$$

$$(1 + j14)V_o - j160I_o = 25$$

But $I_o = (25 - V_o)/2000$

$$(1 + j14)V_o - j2 + j0.08V_o = 25$$

$$V_o = \frac{25 + j2}{1 + j14.08} = \frac{25.08\angle 4.57°}{14.115\angle 58.94°} 1.7768\angle -81.37°$$

Now to solve for i_o,

$$I_o = \frac{25 - V_o}{2000} = \frac{25 - 0.2666 + j1.7567}{2000} = 12.367 + j0.8784\,\text{mA}$$

$$= 12.398\angle 4.06°$$

i_o = **12.398cos(4x10^{3}t + 4.06˚) mA**.

www.konkur.in

Chapter 10, Solution 6.

Let V_o be the voltage across the current source. Using nodal analysis we get:

$$\frac{V_o - 4V_x}{20} - 3 + \frac{V_o}{20 + j10} = 0 \quad \text{where } V_x = \frac{20}{20 + j10} V_o$$

Combining these we get:

$$\frac{V_o}{20} - \frac{4V_o}{20 + j10} - 3 + \frac{V_o}{20 + j10} = 0 \rightarrow (1 + j0.5 - 3)V_o = 60 + j30$$

$$V_o = \frac{60 + j30}{-2 + j0.5} \text{ or } V_x = \frac{20(3)}{-2 + j0.5} =$$

$29.11\angle{-166^\circ}$ V.

www.konkur.in

Chapter 10, Solution 7.

At the main node,

$$\frac{120\angle -15^{o} - V}{40 + j20} = 6\angle 30^{o} + \frac{V}{-j30} + \frac{V}{50} \quad \longrightarrow \quad \frac{115.91 - j31.058}{40 + j20} - 5.196 - j3 = V\left(\frac{1}{40 + j20} + \frac{j}{30} + \frac{1}{50}\right)$$

$$V = \frac{-3.1885 - j4.7805}{0.04 + j0.0233} = \underline{124.08\angle -154^{o} \ \ V}$$

Chapter 10, Solution 8.

$$\omega = 200,$$

$$100\text{mH} \longrightarrow j\omega L = j200\text{x}0.1 = j20$$

$$50\mu\text{F} \longrightarrow \frac{1}{j\omega C} = \frac{1}{j200\text{x}50\text{x}10^{-6}} = -j100$$

The frequency-domain version of the circuit is shown below.

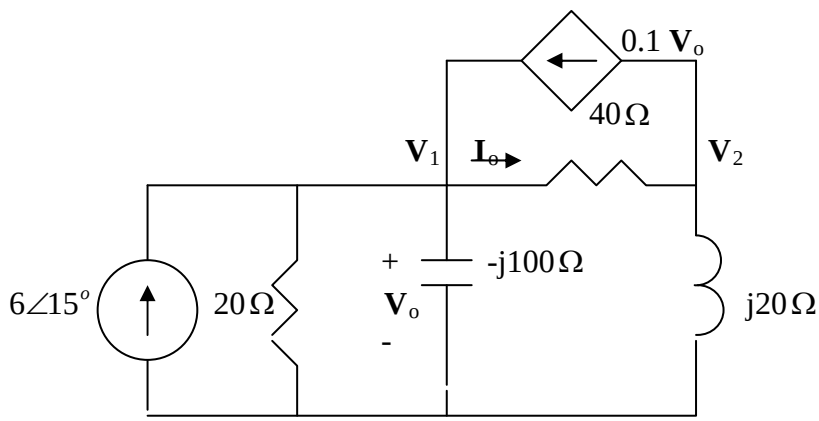

At node 1,

$$6\angle 15^o + 0.1V_1 = \frac{V_1}{20} + \frac{V_1}{-j100} + \frac{V_1 - V_2}{40}$$

or $$5.7955 + j1.5529 = (-0.025 + j0.01)V_1 - 0.025V_2 \qquad (1)$$

At node 2,

$$\frac{V_1 - V_2}{40} = 0.1V_1 + \frac{V_2}{j20} \longrightarrow 0 = 3V_1 + (1 - j2)V_2 \qquad (2)$$

From (1) and (2),

$$\begin{bmatrix} (-0.025 + j0.01) & -0.025 \\ 3 & (1 - j2) \end{bmatrix} \begin{pmatrix} V_1 \\ V_2 \end{pmatrix} = \begin{pmatrix} (5.7955 + j1.5529) \\ 0 \end{pmatrix} \quad \text{or} \quad AV = B$$

Using MATLAB,

www.konkur.in

V = inv(A)*B

leads to $V_1 = -70.63 - j127.23, \qquad V_2 = -110.3 + j161.09$

$$I_o = \frac{V_1 - V_2}{40} = 7.276\angle -82.17^o$$

Thus,

$$\underline{\boldsymbol{i_o(t) = 7.276\cos(200t - 82.17^o)\ \mathbf{A}}}$$

www.konkur.in

Chapter 10, Solution 9.

$$10\cos(10^3 t) \longrightarrow 10\angle 0°, \quad \omega = 10^3$$
$$10 \text{ mH} \longrightarrow j\omega L = j10$$
$$50\ \mu\text{F} \longrightarrow \frac{1}{j\omega C} = \frac{1}{j(10^3)(50\times 10^{-6})} = -j20$$

Consider the circuit shown below.

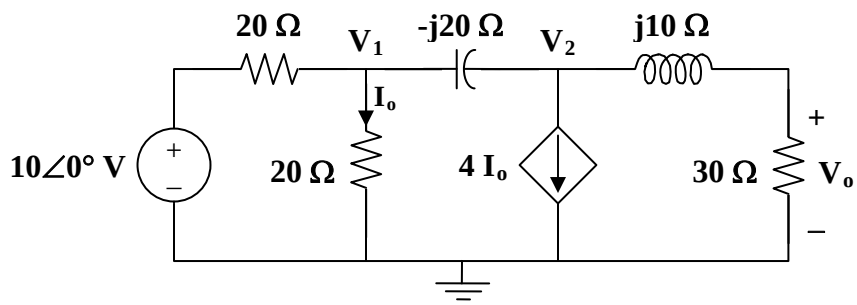

At node 1,

$$\frac{10-\mathbf{V}_1}{20} = \frac{\mathbf{V}_1}{20} + \frac{\mathbf{V}_1-\mathbf{V}_2}{-j20}$$
$$10 = (2+j)\mathbf{V}_1 - j\mathbf{V}_2 \qquad (1)$$

At node 2,

$$\frac{\mathbf{V}_1-\mathbf{V}_2}{-j20} = (4)\frac{\mathbf{V}_1}{20} + \frac{\mathbf{V}_2}{30+j10}, \text{ where } \mathbf{I}_o = \frac{\mathbf{V}_1}{20} \text{ has been substituted.}$$
$$(-4+j)\mathbf{V}_1 = (0.6+j0.8)\mathbf{V}_2$$
$$\mathbf{V}_1 = \frac{0.6+j0.8}{-4+j}\mathbf{V}_2 \qquad (2)$$

Substituting (2) into (1)

$$10 = \frac{(2+j)(0.6+j0.8)}{-4+j}\mathbf{V}_2 - j\mathbf{V}_2$$

or

$$\mathbf{V}_2 = \frac{170}{0.6-j26.2}$$

$$\mathbf{V}_o = \frac{30}{30+j10}\mathbf{V}_2 = \frac{3}{3+j}\cdot\frac{170}{0.6-j26.2} = 6.154\angle 70.26°$$

Therefore, $v_o(t) =$ **6.154 cos(10^3 t + 70.26°) V**

www.konkur.in

Chapter 10, Solution 10.

$$50\text{ mH} \longrightarrow j\omega L = j2000x50x10^{-3} = j100, \qquad \omega = 2000$$

$$2\mu F \longrightarrow \frac{1}{j\omega C} = \frac{1}{j2000x2x10^{-6}} = -j250$$

Consider the frequency-domain equivalent circuit below.

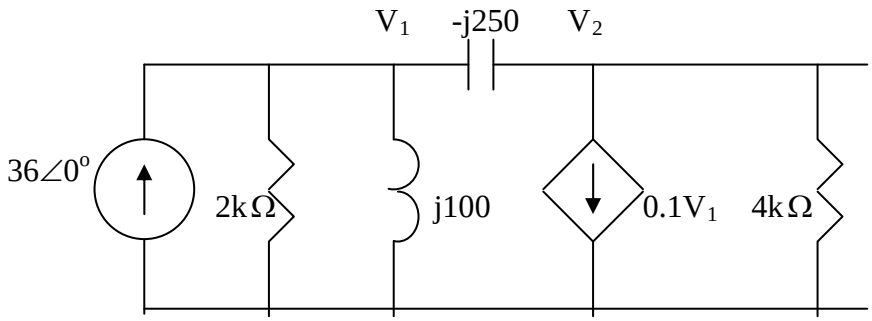

At node 1,

$$36 = \frac{V_1}{2000} + \frac{V_1}{j100} + \frac{V_1 - V_2}{-j250} \longrightarrow 36 = (0.0005 - j0.006)V_1 - j0.004V_2 \qquad (1)$$

At node 2,

$$\frac{V_1 - V_2}{-j250} = 0.1V_1 + \frac{V_2}{4000} \longrightarrow 0 = (0.1 - j0.004)V_1 + (0.00025 + j0.004)V_2 \qquad (2)$$

Solving (1) and (2) gives

$$V_o = V_2 = -535.6 + j893.5 = 8951.1\angle 93.43^o$$

$$v_o(t) = \mathbf{8.951\ sin(2000t + 93.43^o)\ kV}$$

www.konkur.in

Chapter 10, Solution 11.

Consider the circuit as shown below.

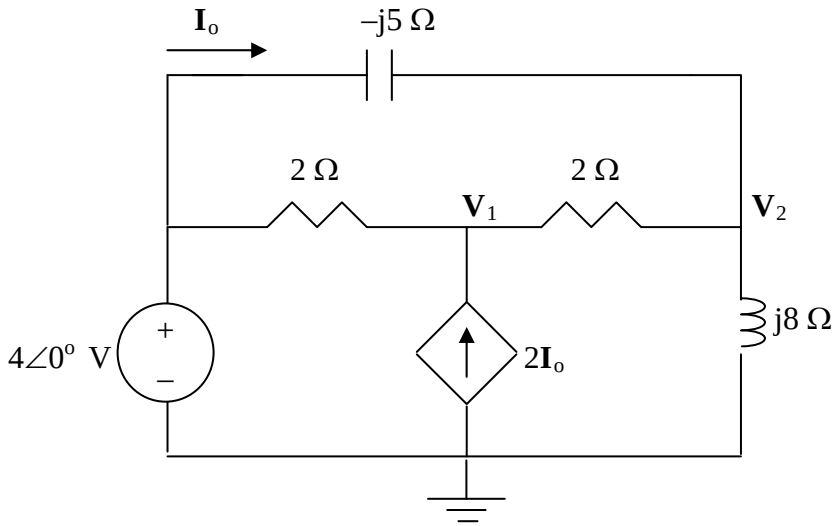

At node 1,

$$\frac{V_1 - 4}{2} - 2I_o + \frac{V_1 - V_2}{2} = 0$$
$$V_1 - 0.5V_2 - 2I_o = 2$$

But, $I_o = (4 - V_2)/(-j5) = -j0.2V_2 + j0.8$

Now the first node equation becomes,

$$V_1 - 0.5V_2 + j0.4V_2 - j1.6 = 2 \text{ or}$$
$$V_1 + (-0.5 + j0.4)V_2 = 2 + j1.6$$

At node 2,

$$\frac{V_2 - V_1}{2} + \frac{V_2 - 4}{-j5} + \frac{V_2 - 0}{j8} = 0$$
$$-0.5V_1 + (0.5 + j0.075)V_2 = j0.8$$

Using MATLAB to solve this, we get,

```
>> Y=[1,(-0.5+0.4i);-0.5,(0.5+0.075i)]

Y =
```

www.konkur.in

```
   1.0000          -0.5000 + 0.4000i
  -0.5000           0.5000 + 0.0750i

>> I=[(2+1.6i);0.8i]

I =

   2.0000 + 1.6000i
        0 + 0.8000i

>> V=inv(Y)*I

V =

   4.8597 + 0.0543i
   4.9955 + 0.9050i
```

$I_o = -j0.2V_2 + j0.8 = -j0.9992 + 0.01086 + j0.8 = 0.01086 - j0.1992$

$= \mathbf{199.5\angle 86.89^\circ\ mA}$.

www.konkur.in

Chapter 10, Solution 12.

Using Fig. 10.61, design a problem to help other students to better understand Nodal analysis.

Although there are many ways to work this problem, this is an example based on the same kind of problem asked in the third edition.

Problem

By nodal analysis, find i_o in the circuit in Fig. 10.61.

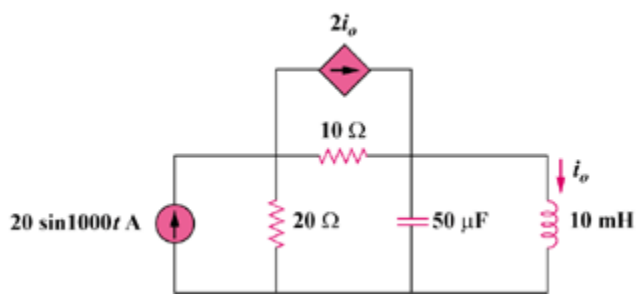

Figure 10.61

Solution

$$20\sin(1000t) \longrightarrow 20\angle 0°, \quad \omega = 1000$$

$$10 \text{ mH} \longrightarrow j\omega L = j10$$

$$50\ \mu\text{F} \longrightarrow \frac{1}{j\omega C} = \frac{1}{j(10^3)(50\times 10^{-6})} = -j20$$

The frequency-domain equivalent circuit is shown below.

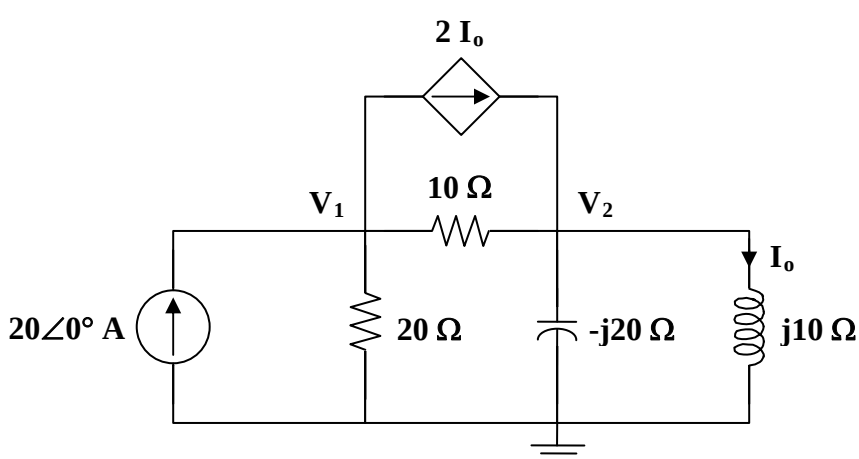

At node 1,

www.konkur.in

$$20 = 2\mathbf{I}_o + \frac{\mathbf{V}_1}{20} + \frac{\mathbf{V}_1 - \mathbf{V}_2}{10},$$ where

$$\mathbf{I}_o = \frac{\mathbf{V}_2}{j10}$$

$$20 = \frac{2\mathbf{V}_2}{j10} + \frac{\mathbf{V}_1}{20} + \frac{\mathbf{V}_1 - \mathbf{V}_2}{10}$$

$$400 = 3\mathbf{V}_1 - (2 + j4)\mathbf{V}_2 \quad (1)$$

At node 2,

$$\frac{2\mathbf{V}_2}{j10} + \frac{\mathbf{V}_1 - \mathbf{V}_2}{10} = \frac{\mathbf{V}_2}{-j20} + \frac{\mathbf{V}_2}{j10}$$

$$j2\mathbf{V}_1 = (-3 + j2)\mathbf{V}_2$$

or

$$\mathbf{V}_1 = (1 + j1.5)\mathbf{V}_2 \quad (2)$$

Substituting (2) into (1),

$$400 = (3 + j4.5)\mathbf{V}_2 - (2 + j4)\mathbf{V}_2 = (1 + j0.5)\mathbf{V}_2$$

$$\mathbf{V}_2 = \frac{400}{1 + j0.5}$$

$$\mathbf{I}_o = \frac{\mathbf{V}_2}{j10} = \frac{40}{j(1 + j0.5)} = 35.74\angle -116.6°$$

Therefore, $i_o(t) =$ **35.74 sin(1000t – 116.6°) A**

www.konkur.in

Chapter 10, Solution 13.

Nodal analysis is the best approach to use on this problem. We can make our work easier by doing a source transformation on the right hand side of the circuit.

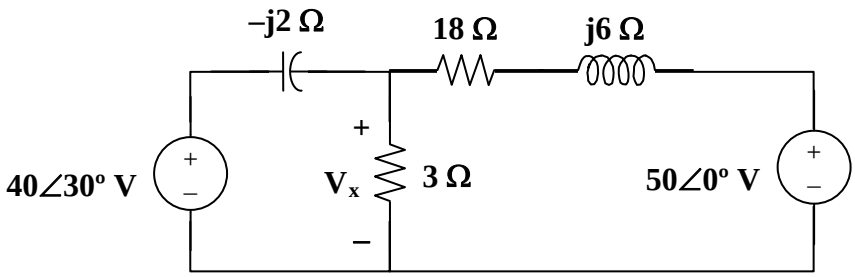

$$\frac{V_x - 40\angle 30^\circ}{-j2} + \frac{V_x}{3} + \frac{V_x - 50}{18 + j6} = 0$$

which leads to V_x = **29.36∠62.88˚ A**.

www.konkur.in

Chapter 10, Solution 14.

At node 1,

$$\frac{0-\mathbf{V}_1}{-j2}+\frac{0-\mathbf{V}_1}{10}+\frac{\mathbf{V}_2-\mathbf{V}_1}{j4}=20\angle 30^\circ$$

$$-(1+j2.5)\mathbf{V}_1-j2.5\mathbf{V}_2=173.2+j100 \qquad (1)$$

At node 2,

$$\frac{\mathbf{V}_2}{j2}+\frac{\mathbf{V}_2}{-j5}+\frac{\mathbf{V}_2-\mathbf{V}_1}{j4}=20\angle 30^\circ$$

$$-j5.5\mathbf{V}_2+j2.5\mathbf{V}_1=173.2+j100 \qquad (2)$$

Equations (1) and (2) can be cast into matrix form as

$$\begin{bmatrix} 1+j2.5 & j2.5 \\ j2.5 & -j5.5 \end{bmatrix}\begin{bmatrix} \mathbf{V}_1 \\ \mathbf{V}_2 \end{bmatrix}=\begin{bmatrix} -200\angle 30^\circ \\ 200\angle 30^\circ \end{bmatrix}$$

$$\Delta=\begin{vmatrix} 1+j2.5 & j2.5 \\ j2.5 & -j5.5 \end{vmatrix}=20-j5.5=20.74\angle -15.38^\circ$$

$$\Delta_1=\begin{vmatrix} -200\angle 30^\circ & j2.5 \\ 200\angle 30^\circ & -j5.5 \end{vmatrix}=j3(200\angle 30^\circ)=600\angle 120^\circ$$

$$\Delta_2=\begin{vmatrix} 1+j2.5 & -200\angle 30^\circ \\ j2.5 & 200\angle 30^\circ \end{vmatrix}=(200\angle 30^\circ)(1+j5)=1020\angle 108.7^\circ$$

$$\mathbf{V}_1=\frac{\Delta_1}{\Delta}=28.93\angle 135.38^\circ\,\text{V}$$

$$\mathbf{V}_2=\frac{\Delta_2}{\Delta}=49.18\angle 124.08^\circ\,\text{V}$$

www.konkur.in

Chapter 10, Solution 15.

We apply nodal analysis to the circuit shown below.

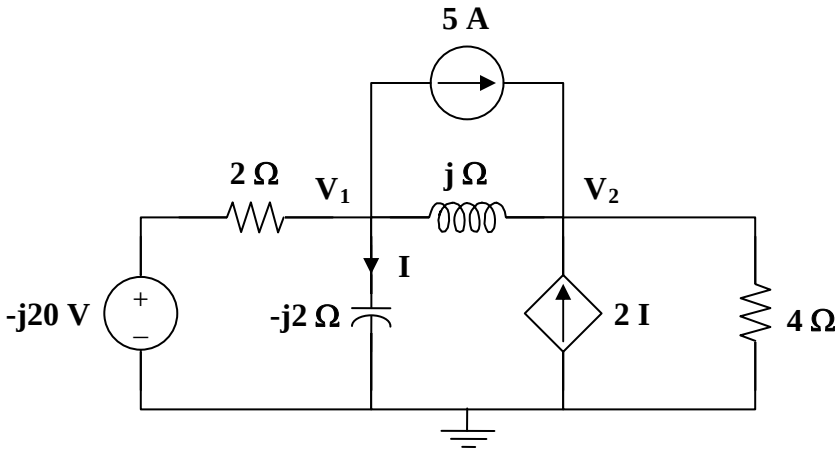

At node 1,

$$\frac{-j20 - \mathbf{V}_1}{2} = 5 + \frac{\mathbf{V}_1}{-j2} + \frac{\mathbf{V}_1 - \mathbf{V}_2}{j}$$

$$-5 - j10 = (0.5 - j0.5)\mathbf{V}_1 + j\mathbf{V}_2 \qquad (1)$$

At node 2,

$$5 + 2\mathbf{I} + \frac{\mathbf{V}_1 - \mathbf{V}_2}{j} = \frac{\mathbf{V}_2}{4},$$

where $\mathbf{I} = \dfrac{\mathbf{V}_1}{-j2}$

$$\mathbf{V}_2 = \frac{5}{0.25 - j}\mathbf{V}_1 \qquad (2)$$

Substituting (2) into (1),

$$-5 - j10 - \frac{j5}{0.25 - j} = 0.5(1 - j)\mathbf{V}_1$$

$$(1 - j)\mathbf{V}_1 = -10 - j20 - \frac{j40}{1 - j4}$$

$$(\sqrt{2}\angle -45°)\mathbf{V}_1 = -10 - j20 + \frac{160}{17} - \frac{j40}{17}$$

$$\mathbf{V}_1 = 15.81\angle 313.5°$$

$$\mathbf{I} = \frac{\mathbf{V}_1}{-j2} = (0.5\angle 90°)(15.81\angle 313.5°)$$

$$\mathbf{I} = \mathbf{7.906\angle 43.49°\ A}$$

www.konkur.in

Chapter 10, Solution 16.

Consider the circuit as shown in the figure below.

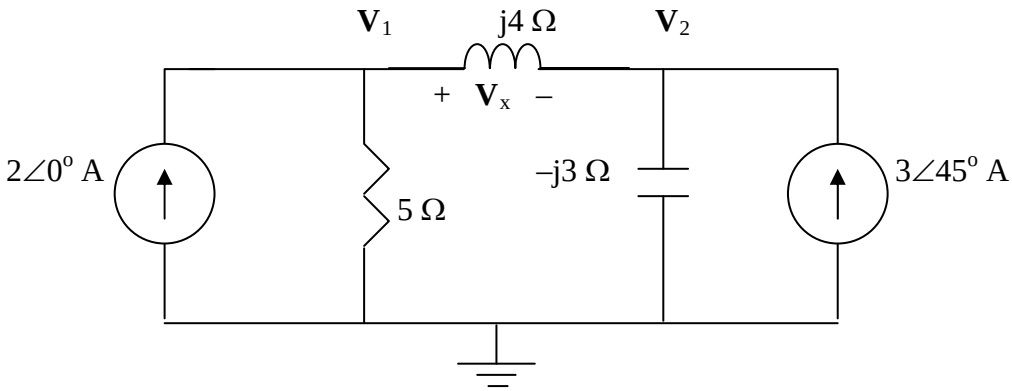

At node 1,

$$-2+\frac{V_1-0}{5}+\frac{V_1-V_2}{j4}=0 \qquad (1)$$

$$(0.2-j0.25)V_1+j0.25V_2=2$$

At node 2,

$$\frac{V_2-V_1}{j4}+\frac{V_2-0}{-j3}-3\angle 45°=0 \qquad (2)$$

$$j0.25V_1+j0.08333V_2=2.121+j2.121$$

In matrix form, (1) and (2) become

$$\begin{bmatrix} 0.2-j0.25 & j0.25 \\ j0.25 & j0.08333 \end{bmatrix}\begin{bmatrix} V_1 \\ V_2 \end{bmatrix}=\begin{bmatrix} 2 \\ 2.121+j2.121 \end{bmatrix}$$

Solving this using MATLAB, we get,

```
>> Y=[(0.2-0.25i),0.25i;0.25i,0.08333i]

Y =

  0.2000 - 0.2500i        0 + 0.2500i
        0 + 0.2500i       0 + 0.0833i

>> I=[2;(2.121+2.121i)]

I =
```

www.konkur.in

```
   2.0000
   2.1210 + 2.1210i

>> V=inv(Y)*I

V =

   5.2793 - 5.4190i
   9.6145 - 9.1955i
```

$$V_s = V_1 - V_2 = -4.335 + j3.776 = \mathbf{5.749\angle 138.94^\circ\ V}.$$

www.konkur.in

Chapter 10, Solution 17.

Consider the circuit below.

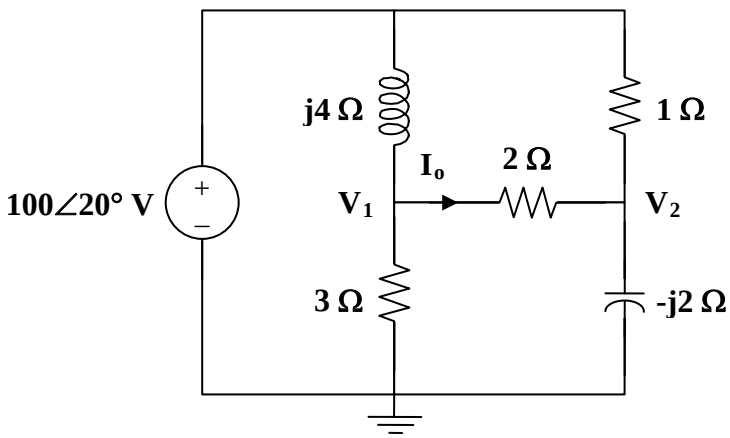

At node 1,

$$\frac{100\angle 20° - \mathbf{V}_1}{j4} = \frac{\mathbf{V}_1}{3} + \frac{\mathbf{V}_1 - \mathbf{V}_2}{2}$$

$$100\angle 20° = \frac{\mathbf{V}_1}{3}(3 + j10) - j2\,\mathbf{V}_2$$

(1)

At node 2,

$$\frac{100\angle 20° - \mathbf{V}_2}{1} + \frac{\mathbf{V}_1 - \mathbf{V}_2}{2} = \frac{\mathbf{V}_2}{-j2}$$

$$100\angle 20° = -0.5\,\mathbf{V}_1 + (1.5 + j0.5)\,\mathbf{V}_2$$

(2)

From (1) and (2),

$$\begin{bmatrix} 100\angle 20° \\ 100\angle 20° \end{bmatrix} = \begin{bmatrix} -0.5 & 0.5(3+j) \\ 1 + j10/3 & -j2 \end{bmatrix} \begin{bmatrix} \mathbf{V}_1 \\ \mathbf{V}_2 \end{bmatrix}$$

$$\Delta = \begin{vmatrix} -0.5 & 1.5 + j0.5 \\ 1 + j10/3 & -j2 \end{vmatrix} = 0.1667 - j4.5$$

$$\Delta_1 = \begin{vmatrix} 100\angle 20° & 1.5 + j0.5 \\ 100\angle 20° & -j2 \end{vmatrix} = -55.45 - j286.2$$

$$\Delta_2 = \begin{vmatrix} -0.5 & 100\angle 20° \\ 1 + j10/3 & 100\angle 20° \end{vmatrix} = -26.95 - j364.5$$

www.konkur.in

$$\mathbf{V}_1 = \frac{\Delta_1}{\Delta} = 64.74\angle -13.08°$$

$$\mathbf{V}_2 = \frac{\Delta_2}{\Delta} = 81.17\angle -6.35°$$

$$\mathbf{I}_o = \frac{\mathbf{V}_1 - \mathbf{V}_2}{2} = \frac{\Delta_1 - \Delta_2}{2\Delta} = \frac{-28.5 + j78.31}{0.3333 - j9}$$

$$\mathbf{I}_o = \mathbf{9.25\angle -162.12°\ A}$$

www.konkur.in

Chapter 10, Solution 18.

Consider the circuit shown below.

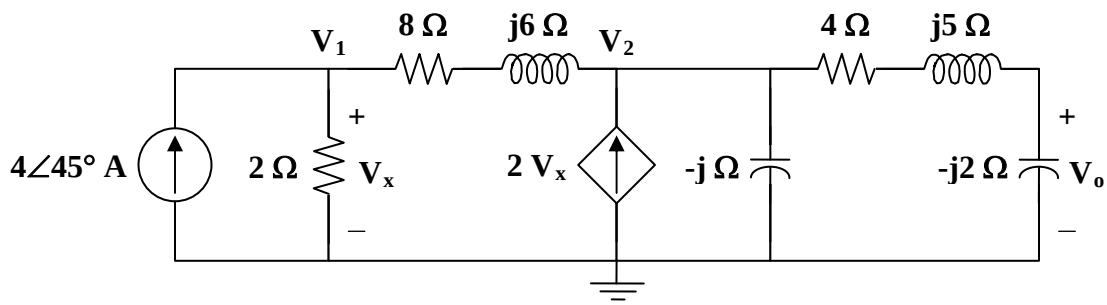

At node 1,

$$4\angle 45° = \frac{\mathbf{V}_1}{2} + \frac{\mathbf{V}_1 - \mathbf{V}_2}{8 + j6}$$

$$200\angle 45° = (29 - j3)\mathbf{V}_1 - (4 - j3)\mathbf{V}_2 \quad (1)$$

At node 2,

$$\frac{\mathbf{V}_1 - \mathbf{V}_2}{8 + j6} + 2\mathbf{V}_x = \frac{\mathbf{V}_2}{-j} + \frac{\mathbf{V}_2}{4 + j5 - j2}, \qquad \text{where } \mathbf{V}_x = \mathbf{V}_1$$

$$(104 - j3)\mathbf{V}_1 = (12 + j41)\mathbf{V}_2$$

$$\mathbf{V}_1 = \frac{12 + j41}{104 - j3}\mathbf{V}_2 \quad (2)$$

Substituting (2) into (1),

$$200\angle 45° = (29 - j3)\frac{(12 + j41)}{104 - j3}\mathbf{V}_2 - (4 - j3)\mathbf{V}_2$$

$$200\angle 45° = (14.21\angle 89.17°)\mathbf{V}_2$$

$$\mathbf{V}_2 = \frac{200\angle 45°}{14.21\angle 89.17°}$$

$$\mathbf{V}_o = \frac{-j2}{4 + j5 - j2}\mathbf{V}_2 = \frac{-j2}{4 + j3}\mathbf{V}_2 = \frac{-6 - j8}{25}\mathbf{V}_2$$

$$\mathbf{V}_o = \frac{10\angle 233.13°}{25} \cdot \frac{200\angle 45°}{14.21\angle 89.17°}$$

$$\mathbf{V}_o = \mathbf{5.63\angle 189°\ V}$$

www.konkur.in

Chapter 10, Solution 19.

We have a supernode as shown in the circuit below.

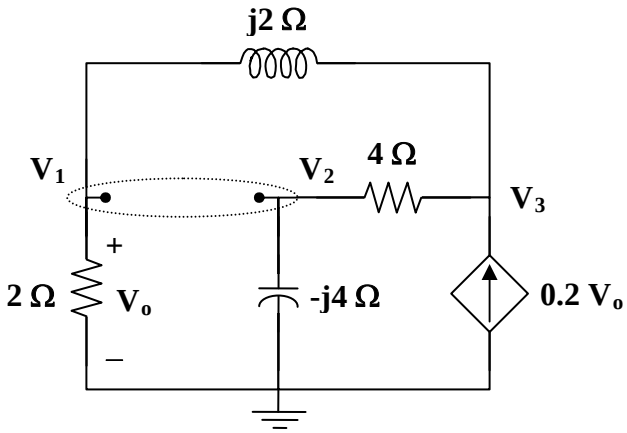

Notice that $\mathbf{V}_o = \mathbf{V}_1$.

At the supernode,

$$\frac{\mathbf{V}_3 - \mathbf{V}_2}{4} = \frac{\mathbf{V}_2}{-j4} + \frac{\mathbf{V}_1}{2} + \frac{\mathbf{V}_1 - \mathbf{V}_3}{j2}$$

$$0 = (2 - j2)\mathbf{V}_1 + (1 + j)\mathbf{V}_2 + (-1 + j2)\mathbf{V}_3 \qquad (1)$$

At node 3,

$$0.2\mathbf{V}_1 + \frac{\mathbf{V}_1 - \mathbf{V}_3}{j2} = \frac{\mathbf{V}_3 - \mathbf{V}_2}{4}$$

$$(0.8 - j2)\mathbf{V}_1 + \mathbf{V}_2 + (-1 + j2)\mathbf{V}_3 = 0 \qquad (2)$$

Subtracting (2) from (1),

$$0 = 1.2\mathbf{V}_1 + j\mathbf{V}_2 \qquad (3)$$

But at the supernode,

$$\mathbf{V}_1 = 12\angle 0° + \mathbf{V}_2$$

or

$$\mathbf{V}_2 = \mathbf{V}_1 - 12 \qquad (4)$$

Substituting (4) into (3),

$$0 = 1.2\mathbf{V}_1 + j(\mathbf{V}_1 - 12)$$

$$\mathbf{V}_1 = \frac{j12}{1.2 + j} = \mathbf{V}_o$$

$$\mathbf{V}_o = \frac{12\angle 90°}{1.562\angle 39.81°}$$

$$\mathbf{V}_o = \mathbf{7.682\angle 50.19°\ V}$$

www.konkur.in

Chapter 10, Solution 20.

The circuit is converted to its frequency-domain equivalent circuit as shown below.

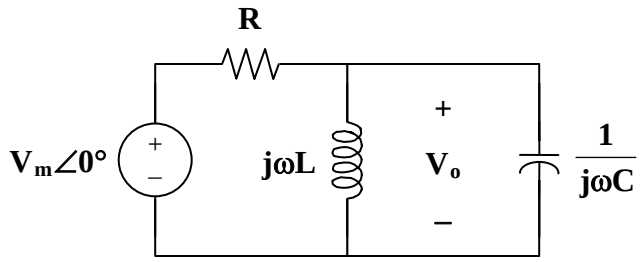

Let $\mathbf{Z} = j\omega L \parallel \dfrac{1}{j\omega C} = \dfrac{\dfrac{L}{C}}{j\omega L + \dfrac{1}{j\omega C}} = \dfrac{j\omega L}{1-\omega^2 LC}$

$$\mathbf{V}_o = \frac{\mathbf{Z}}{R+\mathbf{Z}} V_m = \frac{\dfrac{j\omega L}{1-\omega^2 LC}}{R + \dfrac{j\omega L}{1-\omega^2 LC}} V_m = \frac{j\omega L}{R(1-\omega^2 LC) + j\omega L} V_m$$

$$\mathbf{V}_o = \frac{\omega L V_m}{\sqrt{R^2(1-\omega^2 LC)^2 + \omega^2 L^2}} \angle\left(90° - \tan^{-1}\frac{\omega L}{R(1-\omega^2 LC)}\right)$$

If $\mathbf{V}_o = A\angle\phi$, then

$$A = \frac{\boldsymbol{\omega L V_m}}{\sqrt{\mathbf{R^2(1-\omega^2 LC)^2 + \omega^2 L^2}}}$$

and $\phi = \mathbf{90° - \tan^{-1}\dfrac{\omega L}{R(1-\omega^2 LC)}}$

www.konkur.in

Chapter 10, Solution 21.

(a) $$\frac{\mathbf{V}_o}{\mathbf{V}_i} = \frac{\frac{1}{j\omega C}}{R + j\omega L + \frac{1}{j\omega C}} = \frac{1}{1 - \omega^2 LC + j\omega RC}$$

At $\omega = 0$, $$\frac{\mathbf{V}_o}{\mathbf{V}_i} = \frac{1}{1} = \mathbf{1}$$

As $\omega \to \infty$, $$\frac{\mathbf{V}_o}{\mathbf{V}_i} = \mathbf{0}$$

At $\omega = \frac{1}{\sqrt{LC}}$, $$\frac{\mathbf{V}_o}{\mathbf{V}_i} = \frac{1}{jRC \cdot \frac{1}{\sqrt{LC}}} = \frac{\mathbf{-j}}{\mathbf{R}}\sqrt{\frac{\mathbf{L}}{\mathbf{C}}}$$

(b) $$\frac{\mathbf{V}_o}{\mathbf{V}_i} = \frac{j\omega L}{R + j\omega L + \frac{1}{j\omega C}} = \frac{-\omega^2 LC}{1 - \omega^2 LC + j\omega RC}$$

At $\omega = 0$, $$\frac{\mathbf{V}_o}{\mathbf{V}_i} = \mathbf{0}$$

As $\omega \to \infty$, $$\frac{\mathbf{V}_o}{\mathbf{V}_i} = \frac{1}{1} = \mathbf{1}$$

At $\omega = \frac{1}{\sqrt{LC}}$, $$\frac{\mathbf{V}_o}{\mathbf{V}_i} = \frac{-1}{jRC \cdot \frac{1}{\sqrt{LC}}} = \frac{\mathbf{j}}{\mathbf{R}}\sqrt{\frac{\mathbf{L}}{\mathbf{C}}}$$

www.konkur.in

Chapter 10, Solution 22.

Consider the circuit in the frequency domain as shown below.

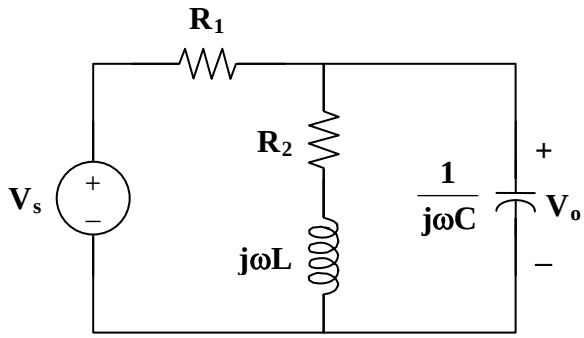

Let $\mathbf{Z} = (R_2 + j\omega L) \,||\, \dfrac{1}{j\omega C}$

$$\mathbf{Z} = \frac{\dfrac{1}{j\omega C}(R_2 + j\omega L)}{R_2 + j\omega L + \dfrac{1}{j\omega C}} = \frac{R_2 + j\omega L}{1 + j\omega R_2 - \omega^2 LC}$$

$$\frac{\mathbf{V}_o}{\mathbf{V}_s} = \frac{\mathbf{Z}}{\mathbf{Z} + R_1} = \frac{\dfrac{R_2 + j\omega L}{1 - \omega^2 LC + j\omega R_2 C}}{R_1 + \dfrac{R_2 + j\omega L}{1 - \omega^2 LC + j\omega R_2 C}}$$

$$\frac{\mathbf{V}_o}{\mathbf{V}_s} = \frac{\mathbf{R_2 + j\omega L}}{\mathbf{R_1 + R_2 - \omega^2 LCR_1 + j\omega(L + R_1 R_2 C)}}$$

www.konkur.in

Chapter 10, Solution 23.

$$\frac{V - V_s}{R} + \frac{V}{j\omega L + \frac{1}{j\omega C}} + j\omega CV = 0$$

$$V + \frac{j\omega RCV}{-\omega^2 LC + 1} + j\omega RCV = V_s$$

$$\left(\frac{1 - \omega^2 LC + j\omega RC + j\omega RC - j\omega^3 RLC^2}{1 - \omega^2 LC}\right) V = V_s$$

$$\boldsymbol{V = \frac{(1 - \omega^2 LC)V_s}{1 - \omega^2 LC + j\omega RC(2 - \omega^2 LC)}}$$

www.konkur.in

Chapter 10, Solution 24.

Design a problem to help other students to better understand mesh analysis.

Although there are many ways to work this problem, this is an example based on the same kind of problem asked in the third edition.

Problem

Use mesh analysis to find $\mathbf{V}_o$ in the circuit in Prob. 10.2.

Solution

Consider the circuit as shown below.

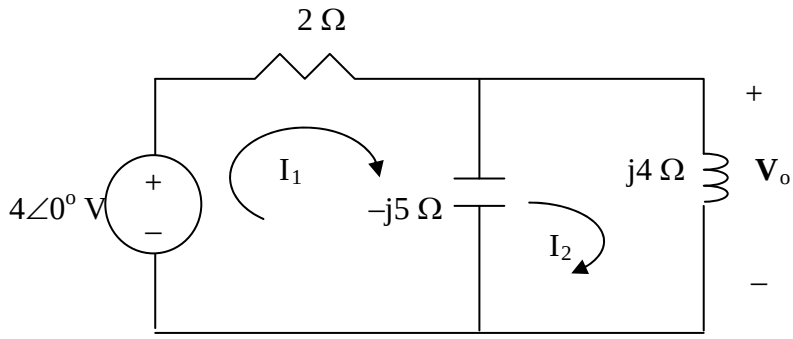

For mesh 1,

$$4 = (2 - j5)I_1 + j5I_1 \qquad (1)$$

For mesh 2,

$$0 = j5I_1 + (j4 - j5)I_2 \quad \longrightarrow \quad I_1 = \frac{1}{5}I_2 \qquad (2)$$

Substituting (2) into (1),

$$4 = (2 - j5)\frac{1}{5}I_2 + j5I_2 \quad \longrightarrow \quad I_2 = \frac{1}{0.1 + j}$$

$\mathbf{V_o}$ = j4$\mathbf{I_2}$ = j4/(0.1+j) = j4/(1.00499∠84.29°) = **3.98∠5.71° V**

Chapter 10, Solution 25.

$\omega = 2$

$$10\cos(2t) \longrightarrow 10\angle 0°$$
$$6\sin(2t) \longrightarrow 6\angle -90° = -j6$$
$$2\text{ H} \longrightarrow j\omega L = j4$$
$$0.25\text{ F} \longrightarrow \frac{1}{j\omega C} = \frac{1}{j(2)(1/4)} = -j2$$

The circuit is shown below.

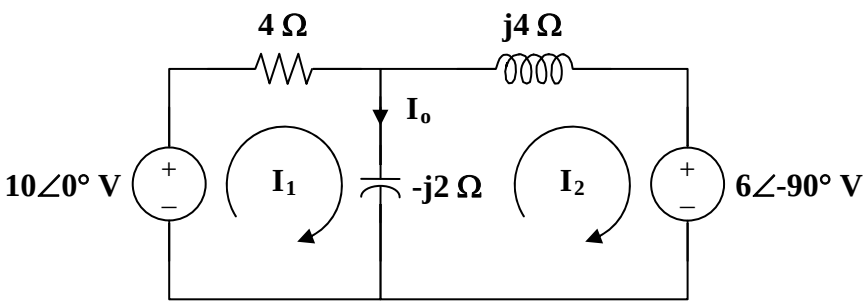

For loop 1,

$$-10 + (4 - j2)\mathbf{I}_1 + j2\mathbf{I}_2 = 0$$
$$5 = (2 - j)\mathbf{I}_1 + j\mathbf{I}_2 \qquad (1)$$

For loop 2,

$$j2\mathbf{I}_1 + (j4 - j2)\mathbf{I}_2 + (-j6) = 0$$
$$\mathbf{I}_1 + \mathbf{I}_2 = 3 \qquad (2)$$

In matrix form (1) and (2) become

$$\begin{bmatrix} 2-j & j \\ 1 & 1 \end{bmatrix}\begin{bmatrix} \mathbf{I}_1 \\ \mathbf{I}_2 \end{bmatrix} = \begin{bmatrix} 5 \\ 3 \end{bmatrix}$$

$$\Delta = 2(1-j), \qquad \Delta_1 = 5 - j3, \qquad \Delta_2 = 1 - j3$$

$$\mathbf{I}_o = \mathbf{I}_1 - \mathbf{I}_2 = \frac{\Delta_1 - \Delta_2}{\Delta} = \frac{4}{2(1-j)} = 1 + j = 1.4142\angle 45°$$

Therefore,

$$i_o(t) = \mathbf{1.4142\cos(2t + 45°)\ A}$$

Chapter 10, Solution 26.

$$0.4H \longrightarrow j\omega L = j10^3 x0.4 = j400$$

$$1\mu F \longrightarrow 1/j\omega C = \frac{1}{j10^3 x10^{-6}} = -j1000$$

$$20\sin(10^3 t) = 20\cos(10^3 t - 90°) \text{ which leads to } 20\angle -90° = -j20$$

The circuit becomes that shown below.

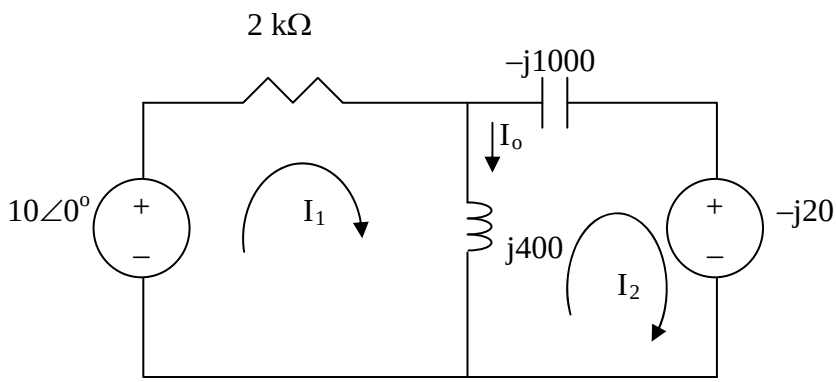

For loop 1,

$$-10 + (12000 + j400)I_1 - j400I_2 = 0 \longrightarrow 1 = (200 + j40)I_1 - j40I_2 \quad (1)$$

For loop 2,

$$-j20 + (j400 - j1000)I_2 - j400I_1 = 0 \longrightarrow -12 = 40I_1 + 60I_2$$

(2)

In matrix form, (1) and (2) become

$$\begin{bmatrix} 1 \\ -12 \end{bmatrix} = \begin{bmatrix} 200 + j40 & -j40 \\ 40 & 60 \end{bmatrix} \begin{bmatrix} I_1 \\ I_2 \end{bmatrix}$$

Solving this leads to

I_1 =0.0025-j0.0075, I_2 = -0.035+j0.005

$I_o = I_1 - I_2 = 0.0375 - j0.0125 = 39.5\angle -18.43°$ mA

$i_o(t)$ = **$39.5\cos(10^3 t - 18.43°)$ mA**

www.konkur.in

Chapter 10, Solution 27.

For mesh 1,

$$-40\angle 30° + (j10 - j20)\mathbf{I}_1 + j20\mathbf{I}_2 = 0$$
$$4\angle 30° = -j\mathbf{I}_1 + j2\mathbf{I}_2 \qquad (1)$$

For mesh 2,

$$50\angle 0° + (40 - j20)\mathbf{I}_2 + j20\mathbf{I}_1 = 0$$
$$5 = -j2\mathbf{I}_1 - (4 - j2)\mathbf{I}_2 \qquad (2)$$

From (1) and (2),

$$\begin{bmatrix} 4\angle 30° \\ 5 \end{bmatrix} = \begin{bmatrix} -j & j2 \\ -j2 & -(4-j2) \end{bmatrix} \begin{bmatrix} \mathbf{I}_1 \\ \mathbf{I}_2 \end{bmatrix}$$

$$\Delta = -2 + 4j = 4.472\angle 116.56°$$

$$\Delta_1 = -(4\angle 30°)(4 - j2) - j10 = 21.01\angle 211.8°$$

$$\Delta_2 = -j5 + 8\angle 120° = 4.44\angle 154.27°$$

$$\mathbf{I}_1 = \frac{\Delta_1}{\Delta} = \mathbf{4.698\angle 95.24°\ A}$$

$$\mathbf{I}_2 = \frac{\Delta_2}{\Delta} = \mathbf{992.8\angle 37.71°\ mA}$$

www.konkur.in

Chapter 10, Solution 28.

$$1H \longrightarrow j\omega L = j4, \qquad 1F \longrightarrow \frac{1}{j\omega C} = \frac{1}{j1x4} = -j0.25$$

The frequency-domain version of the circuit is shown below, where

$$V_1 = 10\angle 0^o, \qquad V_2 = 20\angle -30^o \ .$$

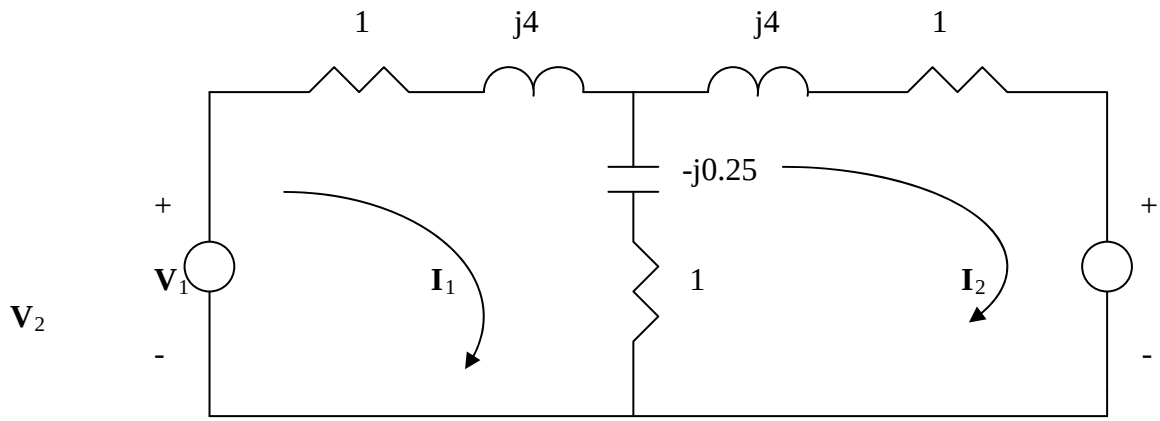

$$V_1 = 10\angle 0^o, \qquad V_2 = 20\angle -30^o$$

Applying mesh analysis,

$$10 = (2 + j3.75)I_1 - (1 - j0.25)I_2 \qquad (1)$$

$$-20\angle -30^o = -(1 - j0.25)I_1 + (2 + j3.75)I_2 \qquad (2)$$

From (1) and (2), we obtain

$$\begin{pmatrix} 10 \\ -17.32 + j10 \end{pmatrix} = \begin{pmatrix} 2 + j3.75 & -1 + j0.25 \\ -1 + j0.25 & 2 + j3.75 \end{pmatrix} \begin{pmatrix} I_1 \\ I_2 \end{pmatrix}$$

Solving this leads to

$$I_1 = 2.741\angle -41.07^o, \qquad I_2 = 4.114\angle 92^o$$

Hence,

$i_1(t)$ = **2.741cos(4t–41.07˚)A**, $i_2(t)$ = **4.114cos(4t+92˚)A**.

www.konkur.in

Chapter 10, Solution 29.

Using Fig. 10.77, design a problem to help other students better understand mesh analysis.

Although there are many ways to work this problem, this is an example based on the same kind of problem asked in the third edition.

Problem

By using mesh analysis, find $\mathbf{I}_1$ and $\mathbf{I}_2$ in the circuit depicted in Fig. 10.77.

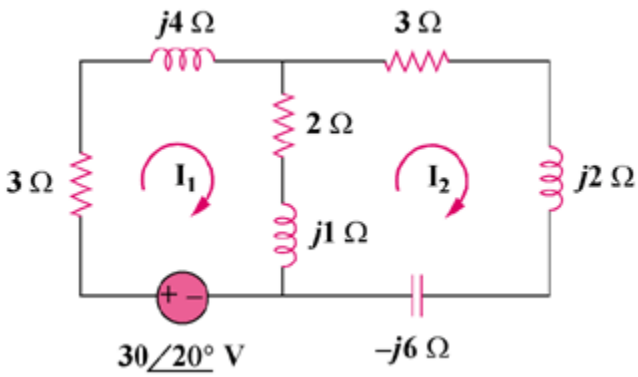

Figure 10.77

Solution

For mesh 1,

$$(5+j5)\mathbf{I}_1-(2+j)\mathbf{I}_2-30\angle 20^\circ=0$$
$$30\angle 20^\circ=(5+j5)\mathbf{I}_1-(2+j)\mathbf{I}_2 \qquad (1)$$

For mesh 2,

$$(5+j3-j6)\mathbf{I}_2-(2+j)\mathbf{I}_1=0$$
$$0=-(2+j)\mathbf{I}_1+(5-j3)\mathbf{I}_2 \qquad (2)$$

From (1) and (2),

$$\begin{bmatrix} 30\angle 20^\circ \\ 0 \end{bmatrix}=\begin{bmatrix} 5+j5 & -(2+j) \\ -(2+j) & 5-j3 \end{bmatrix}\begin{bmatrix} \mathbf{I}_1 \\ \mathbf{I}_2 \end{bmatrix}$$

$$\Delta=37+j6=37.48\angle 9.21^\circ$$
$$\Delta_1=(30\angle 20^\circ)(5.831\angle -30.96^\circ)=175\angle -10.96^\circ$$
$$\Delta_2=(30\angle 20^\circ)(2.356\angle 26.56^\circ)=67.08\angle 46.56^\circ$$

www.konkur.in

$$\mathbf{I}_1 = \frac{\Delta_1}{\Delta} = \mathbf{4.67\angle{-20.17}^\circ\ A}$$

$$\mathbf{I}_2 = \frac{\Delta_2}{\Delta} = \mathbf{1.79\angle 37.35^\circ\ A}$$

Chapter 10, Solution 30.

$$300mH \longrightarrow j\omega L = j100x300x10^{-3} = j30$$
$$200mH \longrightarrow j\omega L = j100x200x10^{-3} = j20$$
$$400mH \longrightarrow j\omega L = j100x400x10^{-3} = j40$$
$$50\mu F \longrightarrow 1/j\omega C = \frac{1}{j100x50x10^{-6}} = -j200$$

The circuit becomes that shown below.

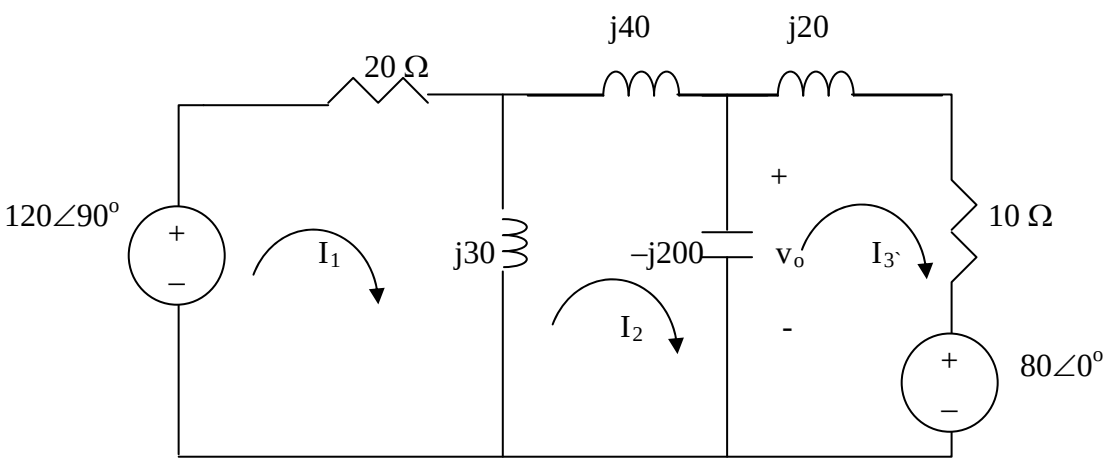

For mesh 1,

$$-120 < 90^o + (20 + j30)I_1 - j30I_2 = 0 \longrightarrow j120 = (20 + j30)I_1 - j30I_2 \qquad (1)$$

For mesh 2,

$$-j30I_1 + (j30 + j40 - j200)I_2 + j200I_3 = 0 \longrightarrow 0 = -3I_1 - 13I_2 + 20I_3 \qquad (2)$$

For mesh 3,

$$80 + j200I_2 + (10 - j180)I_3 = 0 \rightarrow -8 = j20I_2 + (1 - j18)I_3 \qquad (3)$$

We put (1) to (3) in matrix form.

$$\begin{bmatrix} 2+j3 & -j3 & 0 \\ -3 & -13 & 20 \\ 0 & j20 & 1-j18 \end{bmatrix} \begin{bmatrix} I_1 \\ I_2 \\ I_3 \end{bmatrix} = \begin{bmatrix} j12 \\ 0 \\ -8 \end{bmatrix}$$

This is an excellent candidate for MATLAB.

```
>> Z=[(2+3i),-3i,0;-3,-13,20;0,20i,(1-18i)]

Z =

   2.0000 + 3.0000i        0 - 3.0000i        0
```

www.konkur.in

```
  -3.0000          -13.0000           20.0000
        0                0 +20.0000i   1.0000 -18.0000i

>> V=[12i;0;-8]

V =

        0 +12.0000i
        0
  -8.0000

>> I=inv(Z)*V

I =

   2.0557 + 3.5651i
   0.4324 + 2.1946i
   0.5894 + 1.9612i
```

$V_o = -j200(I_2 - I_3) = -j200(-0.157+j0.2334) = 46.68 + j31.4 = 56.26\angle 33.93^\circ$

v_o = **56.26cos(100t + 33.93˚) V**.

Chapter 10, Solution 31.

Consider the network shown below.

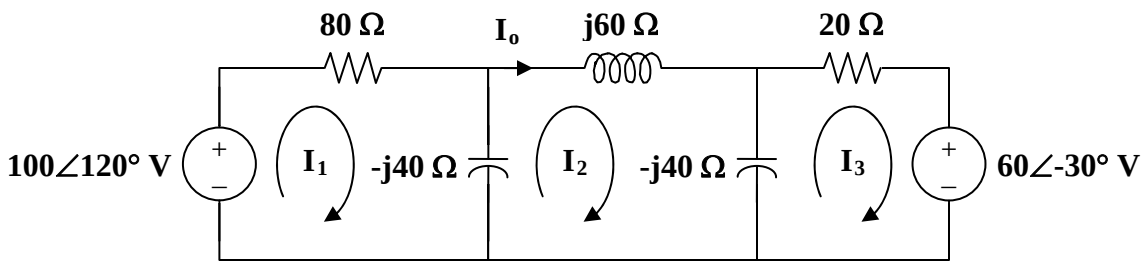

For loop 1,

$$-100\angle 120° + (80 - j40)\mathbf{I}_1 + j40\mathbf{I}_2 = 0$$

$$10\angle 20° = 4(2 - j)\mathbf{I}_1 + j4\mathbf{I}_2 \qquad (1)$$

For loop 2,

$$j40\mathbf{I}_1 + (j60 - j80)\mathbf{I}_2 + j40\mathbf{I}_3 = 0$$

$$0 = 2\mathbf{I}_1 - \mathbf{I}_2 + 2\mathbf{I}_3 \qquad (2)$$

For loop 3,

$$60\angle -30° + (20 - j40)\mathbf{I}_3 + j40\mathbf{I}_2 = 0$$

$$-6\angle -30° = j4\mathbf{I}_2 + 2(1 - j2)\mathbf{I}_3 \qquad (3)$$

From (2),

$$2\mathbf{I}_3 = \mathbf{I}_2 - 2\mathbf{I}_1$$

Substituting this equation into (3),

$$-6\angle -30° = -2(1 - j2)\mathbf{I}_1 + (1 + j2)\mathbf{I}_2 \qquad (4)$$

From (1) and (4),

$$\begin{bmatrix} 10\angle 120° \\ -6\angle -30° \end{bmatrix} = \begin{bmatrix} 4(2 - j) & j4 \\ -2(1 - j2) & 1 + j2 \end{bmatrix} \begin{bmatrix} \mathbf{I}_1 \\ \mathbf{I}_2 \end{bmatrix}$$

$$\Delta = \begin{vmatrix} 8 - j4 & -j4 \\ -2 + j4 & 1 + j2 \end{vmatrix} = 32 + j20 = 37.74\angle 32°$$

$$\Delta_2 = \begin{vmatrix} 8 - j4 & 10\angle 120° \\ -2 + j4 & -6\angle -30° \end{vmatrix} = -4.928 + j82.11 = 82.25\angle 93.44°$$

$$\mathbf{I}_o = \mathbf{I}_2 = \frac{\Delta_2}{\Delta} = \mathbf{2.179\angle 61.44°\ A}$$

www.konkur.in

Chapter 10, Solution 32.

Consider the circuit below.

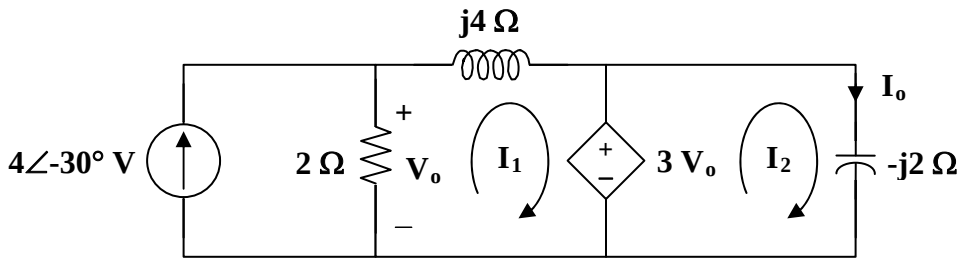

For mesh 1,

$$(2+j4)\mathbf{I}_1 - 2(4\angle -30°) + 3\mathbf{V}_o = 0$$

where $$\mathbf{V}_o = 2(4\angle -30° - \mathbf{I}_1)$$

Hence,

$$(2+j4)\mathbf{I}_1 - 8\angle -30° + 6(4\angle -30° - \mathbf{I}_1) = 0$$

$$4\angle -30° = (1-j)\mathbf{I}_1$$

or $$\mathbf{I}_1 = 2\sqrt{2}\angle 15°$$

$$\mathbf{I}_o = \frac{3\mathbf{V}_o}{-j2} = \frac{3}{-j2}(2)(4\angle -30° - \mathbf{I}_1)$$

$$\mathbf{I}_o = j3(4\angle -30° - 2\sqrt{2}\angle 15°)$$

$$\mathbf{I}_o = \mathbf{8.485\angle 15°\ A}$$

$$\mathbf{V}_o = \frac{-j2\mathbf{I}_o}{3} = \mathbf{5.657\angle -75°\ V}$$

www.konkur.in

Chapter 10, Solution 33.

Consider the circuit shown below.

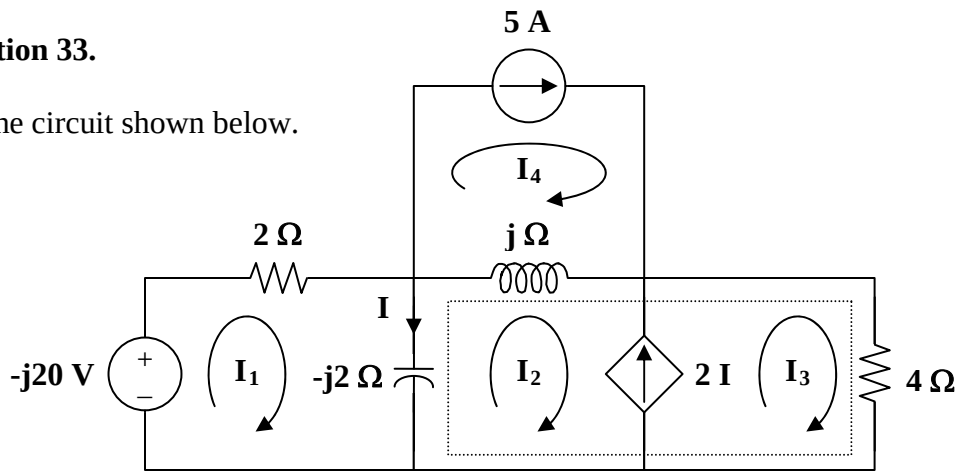

For mesh 1,

$$j20 + (2 - j2)\mathbf{I}_1 + j2\mathbf{I}_2 = 0$$

$$(1 - j)\mathbf{I}_1 + j\mathbf{I}_2 = -j10 \qquad (1)$$

For the supermesh,

$$(j - j2)\mathbf{I}_2 + j2\mathbf{I}_1 + 4\mathbf{I}_3 - j\mathbf{I}_4 = 0 \qquad (2)$$

Also,

$$\mathbf{I}_3 - \mathbf{I}_2 = 2\mathbf{I} = 2(\mathbf{I}_1 - \mathbf{I}_2)$$

$$\mathbf{I}_3 = 2\mathbf{I}_1 - \mathbf{I}_2 \qquad (3)$$

For mesh 4,

$$\mathbf{I}_4 = 5 \qquad (4)$$

Substituting (3) and (4) into (2),

$$(8 + j2)\mathbf{I}_1 - (-4 + j)\mathbf{I}_2 = j5 \qquad (5)$$

Putting (1) and (5) in matrix form,

$$\begin{bmatrix} 1 - j & j \\ 8 + j2 & 4 - j \end{bmatrix}\begin{bmatrix} \mathbf{I}_1 \\ \mathbf{I}_2 \end{bmatrix} = \begin{bmatrix} -j10 \\ j5 \end{bmatrix}$$

$$\Delta = -3 - j5, \qquad \Delta_1 = -5 + j40, \qquad \Delta_2 = -15 + j85$$

$$\mathbf{I} = \mathbf{I}_1 - \mathbf{I}_2 = \frac{\Delta_1 - \Delta_2}{\Delta} = \frac{10 - j45}{-3 - j5} =$$

$$\mathbf{7.906\angle 43.49^\circ\ A}$$

www.konkur.in

Chapter 10, Solution 34.

The circuit is shown below.

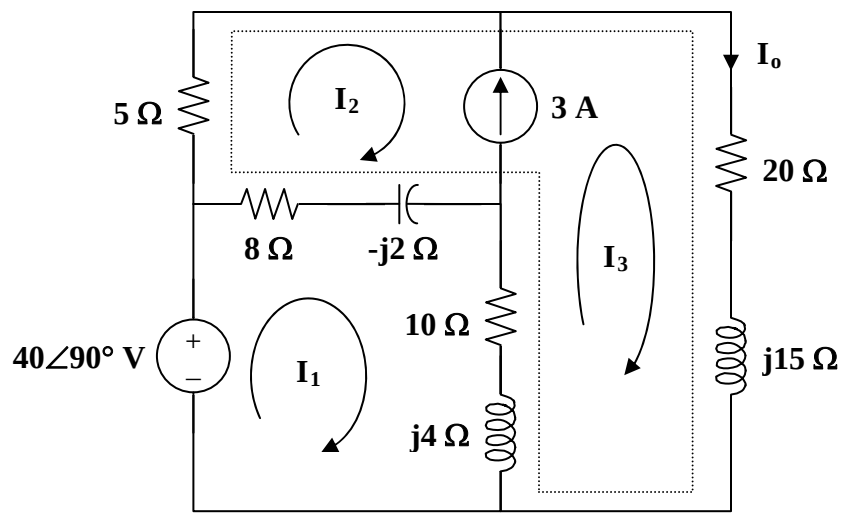

For mesh 1,

$$-\,j40 + (18 + j2)\mathbf{I}_1 - (8 - j2)\mathbf{I}_2 - (10 + j4)\mathbf{I}_3 = 0 \qquad (1)$$

For the supermesh,

$$(13 - j2)\mathbf{I}_2 + (30 + j19)\mathbf{I}_3 - (18 + j2)\mathbf{I}_1 = 0 \qquad (2)$$

Also,

$$\mathbf{I}_2 = \mathbf{I}_3 - 3 \qquad (3)$$

Adding (1) and (2) and incorporating (3),

$$-\,j40 + 5(\mathbf{I}_3 - 3) + (20 + j15)\mathbf{I}_3 = 0$$

$$\mathbf{I}_3 = \frac{3 + j8}{5 + j3} = 1.465\angle 38.48°$$

$$\mathbf{I}_o = \mathbf{I}_3 = \mathbf{1.465\angle 38.48°\ A}$$

www.konkur.in

Chapter 10, Solution 35.

Consider the circuit shown below.

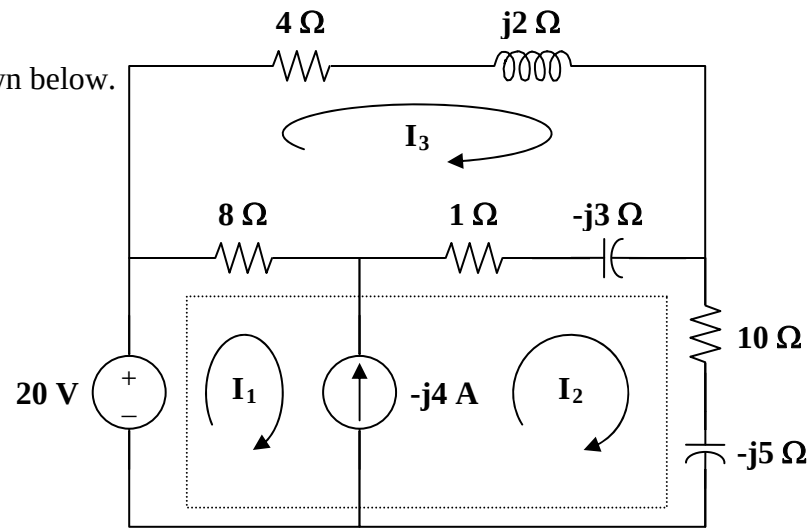

For the supermesh,

$$-20 + 8\mathbf{I}_1 + (11 - j8)\mathbf{I}_2 - (9 - j3)\mathbf{I}_3 = 0 \qquad (1)$$

Also,

$$\mathbf{I}_1 = \mathbf{I}_2 + j4 \qquad (2)$$

For mesh 3,

$$(13 - j)\mathbf{I}_3 - 8\mathbf{I}_1 - (1 - j3)\mathbf{I}_2 = 0 \qquad (3)$$

Substituting (2) into (1),

$$(19 - j8)\mathbf{I}_2 - (9 - j3)\mathbf{I}_3 = 20 - j32 \qquad (4)$$

Substituting (2) into (3),

$$-(9 - j3)\mathbf{I}_2 + (13 - j)\mathbf{I}_3 = j32 \qquad (5)$$

From (4) and (5),

$$\begin{bmatrix} 19 - j8 & -(9 - j3) \\ -(9 - j3) & 13 - j \end{bmatrix} \begin{bmatrix} \mathbf{I}_2 \\ \mathbf{I}_3 \end{bmatrix} = \begin{bmatrix} 20 - j32 \\ j32 \end{bmatrix}$$

$$\Delta = 167 - j69, \qquad \Delta_2 = 324 - j148$$

$$\mathbf{I}_2 = \frac{\Delta_2}{\Delta} = \frac{324 - j148}{167 - j69} = \frac{356.2\angle -24.55^\circ}{180.69\angle -22.45^\circ}$$

$$\mathbf{I}_2 = \mathbf{1.971\angle -2.1^\circ\ A}$$

www.konkur.in

Chapter 10, Solution 36.

Consider the circuit below.

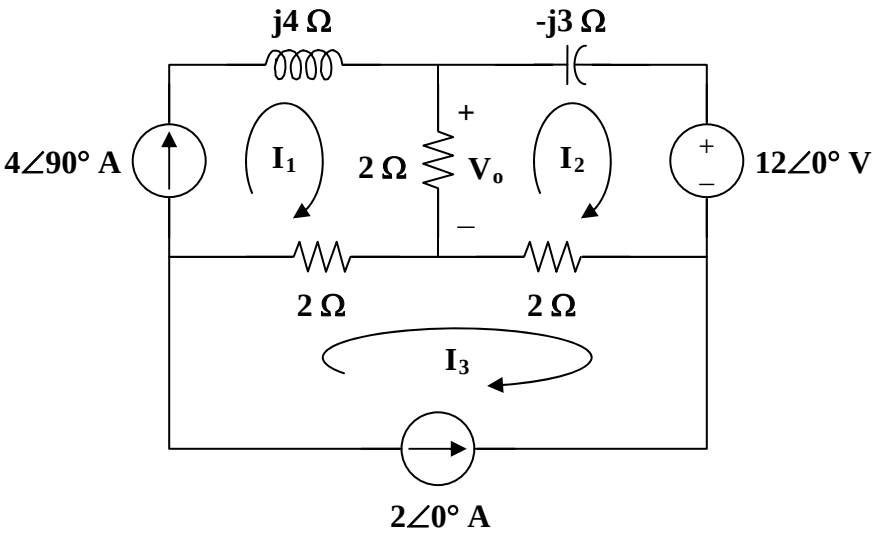

Clearly,

$$\mathbf{I}_1 = 4\angle 90° = \text{j}4 \qquad \text{and} \qquad \mathbf{I}_3 = -2$$

For mesh 2,

$$(4-\text{j}3)\mathbf{I}_2 - 2\mathbf{I}_1 - 2\mathbf{I}_3 + 12 = 0$$

$$(4-\text{j}3)\mathbf{I}_2 - \text{j}8 + 4 + 12 = 0$$

$$\mathbf{I}_2 = \frac{-16+\text{j}8}{4-\text{j}3} = -3.52 - \text{j}0.64$$

Thus,

$$\mathbf{V}_o = 2(\mathbf{I}_1 - \mathbf{I}_2) = (2)(3.52 + \text{j}4.64) = 7.04 + \text{j}9.28$$

$$\mathbf{V}_o = \mathbf{11.648\angle 52.82°\ V}$$

www.konkur.in

Chapter 10, Solution 37.

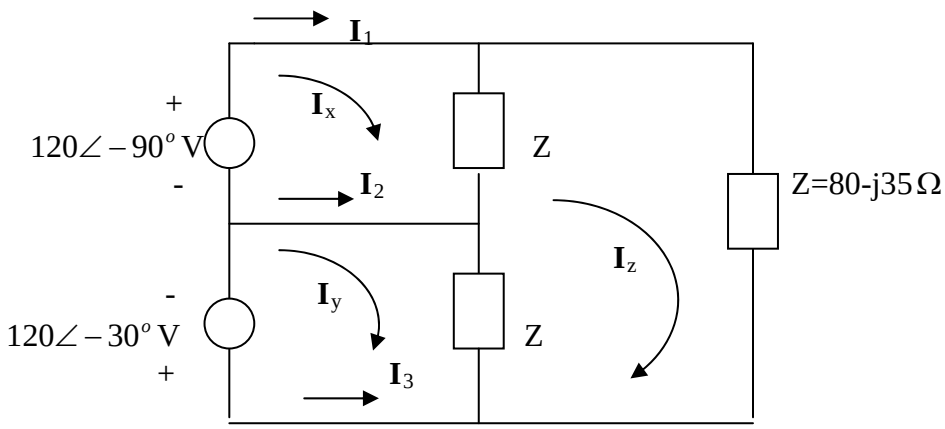

For mesh x,

$$ZI_x - ZI_z = -j120 \qquad (1)$$

For mesh y,

$$ZI_y - ZI_z = -120\angle 30^o = -103.92 + j60 \qquad (2)$$

For mesh z,

$$-ZI_x - ZI_y + 3ZI_z = 0 \qquad (3)$$

Putting (1) to (3) together leads to the following matrix equation:

$$\begin{pmatrix} (80-j35) & 0 & (-80+j35) \\ 0 & (80-j35) & (-80+j35) \\ (-80+j35) & (-80+j35) & (240-j105) \end{pmatrix} \begin{pmatrix} I_x \\ I_y \\ I_z \end{pmatrix} = \begin{pmatrix} -j120 \\ -103.92+j60 \\ 0 \end{pmatrix} \longrightarrow \quad AI = B$$

Using MATLAB, we obtain

$$I = \text{inv}(A) * B = \begin{pmatrix} -0.2641 - j2.366 \\ -2.181 - j0.954 \\ -0.815 - j1.1066 \end{pmatrix}$$

$$\boldsymbol{I_1 = I_x = -0.2641 - j2.366 = \underline{2.38\angle -96.37^o}\ \text{A}}$$
$$\boldsymbol{I_2 = I_y - I_x = -1.9167 + j1.4116 = \underline{2.38\angle 143.63^o}\ \text{A}}$$
$$\boldsymbol{I_3 = -I_y = 2.181 + j0.954 = \underline{2.38\angle 23.63^o\ \text{A}}}$$

www.konkur.in

Chapter 10, Solution 38.

Consider the circuit below.

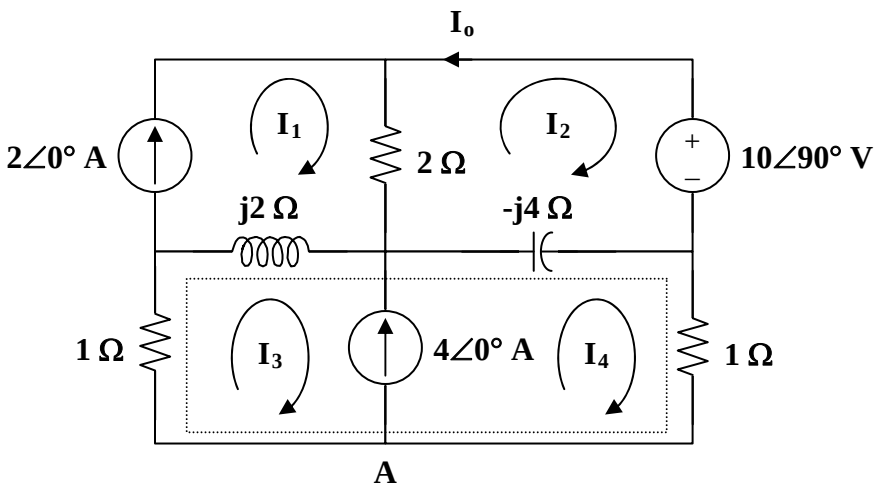

Clearly,

$$\mathbf{I}_1 = 2 \qquad (1)$$

For mesh 2,

$$(2 - j4)\mathbf{I}_2 - 2\mathbf{I}_1 + j4\mathbf{I}_4 + 10\angle 90° = 0 \qquad (2)$$

Substitute (1) into (2) to get

$$(1 - j2)\mathbf{I}_2 + j2\mathbf{I}_4 = 2 - j5$$

For the supermesh,

$$(1 + j2)\mathbf{I}_3 - j2\mathbf{I}_1 + (1 - j4)\mathbf{I}_4 + j4\mathbf{I}_2 = 0$$

$$j4\mathbf{I}_2 + (1 + j2)\mathbf{I}_3 + (1 - j4)\mathbf{I}_4 = j4 \qquad (3)$$

At node A,

$$\mathbf{I}_3 = \mathbf{I}_4 - 4 \qquad (4)$$

Substituting (4) into (3) gives

$$j2\mathbf{I}_2 + (1 - j)\mathbf{I}_4 = 2(1 + j3) \qquad (5)$$

From (2) and (5),

$$\begin{bmatrix} 1 - j2 & j2 \\ j2 & 1 - j \end{bmatrix} \begin{bmatrix} \mathbf{I}_2 \\ \mathbf{I}_4 \end{bmatrix} = \begin{bmatrix} 2 - j5 \\ 2 + j6 \end{bmatrix}$$

$$\Delta = 3 - j3, \qquad \Delta_1 = 9 - j11$$

$$\mathbf{I}_o = -\mathbf{I}_2 = \frac{-\Delta_1}{\Delta} = \frac{-(9 - j11)}{3 - j3} = \frac{1}{3}(-10 + j)$$

$$\mathbf{I}_o = \mathbf{3.35\angle 174.3° \ A}$$

www.konkur.in

Chapter 10, Solution 39.

For mesh 1,

$$(28 - j15)I_1 - 8I_2 + j15I_3 = 12\angle 64^o \qquad (1)$$

For mesh 2,

$$-8I_1 + (8 - j9)I_2 - j16I_3 = 0 \qquad (2)$$

For mesh 3,

$$j15I_1 - j16I_2 + (10 + j)I_3 = 0 \qquad (3)$$

In matrix form, (1) to (3) can be cast as

$$\begin{pmatrix} (28 - j15) & -8 & j15 \\ -8 & (8 - j9) & -j16 \\ j15 & -j16 & (10 + j) \end{pmatrix} \begin{pmatrix} I_1 \\ I_2 \\ I_3 \end{pmatrix} = \begin{pmatrix} 12\angle 64^o \\ 0 \\ 0 \end{pmatrix} \quad \text{or} \quad AI = B$$

Using MATLAB,

```
I = inv(A)*B
```

$$I_1 = -0.128 + j0.3593 = \mathbf{381.4\angle 109.6°\ mA}$$
$$I_2 = -0.1946 + j0.2841 = \mathbf{344.3\angle 124.4°\ mA}$$
$$I_3 = 0.0718 - j0.1265 = \mathbf{145.5\angle -60.42°\ mA}$$
$$I_x = I_1 - I_2 = 0.0666 + j0.0752 = \mathbf{100.5\angle 48.5°\ mA}$$

381.4∠109.6° mA, 344.3∠124.4° mA, 145.5∠–60.42° mA, 100.5∠48.5° mA

www.konkur.in

Chapter 10, Solution 40.

Let $I_o = I_{o1} + I_{o2}$, where I_{o1} is due to the dc source and I_{o2} is due to the ac source. For I_{o1}, consider the circuit in Fig. (a).
Clearly,

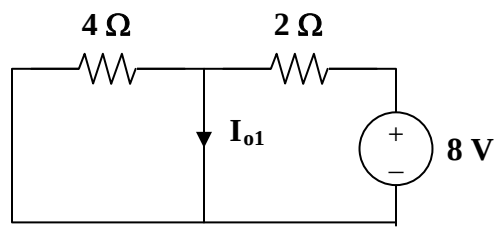

(a)

$I_{o1} = 8/2 = 4$ A

For I_{o2}, consider the circuit in Fig. (b).

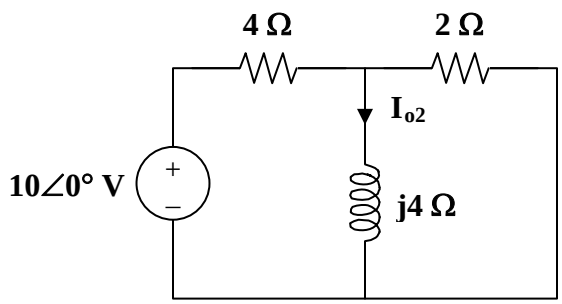

(b)

If we transform the voltage source, we have the circuit in Fig. (c), where $4 \parallel 2 = 4/3\,\Omega$.

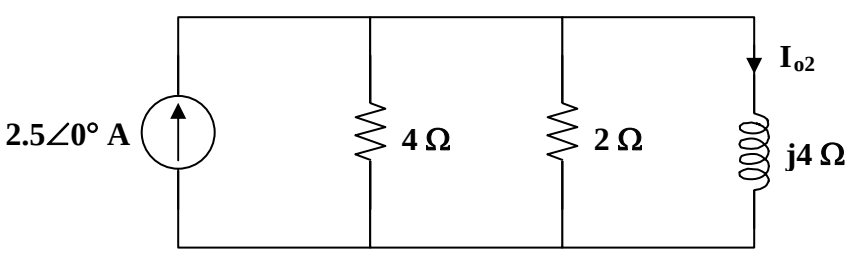

(c)

By the current division principle,

$$\mathbf{I}_{o2} = \frac{4/3}{4/3 + j4}(2.5\angle 0°)$$

$$\mathbf{I}_{o2} = 0.25 - j0.75 = 0.79\angle -71.56°$$

Thus, $$I_{o2} = 0.79\cos(4t - 71.56°)\ A$$

Therefore,

$$I_o = I_{o1} + I_{o2} = \mathbf{[4 + 0.79\cos(4t–71.56°)]\ A}$$

www.konkur.in

Chapter 10, Solution 41.

We apply superposition principle. We let

$$v_o = v_1 + v_2$$

where v_1 and v_2 are due to the sources 6cos2t and 4sin4t respectively. To find v_1, consider the circuit below.

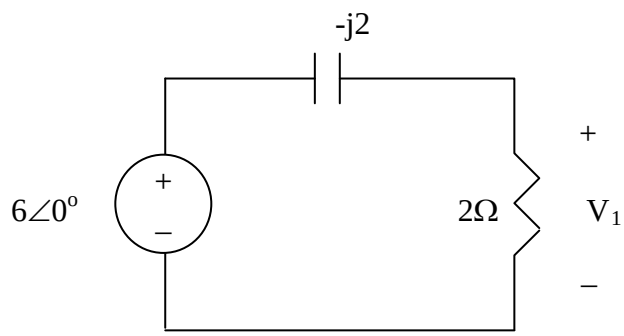

$$1/4F \longrightarrow \frac{1}{j\omega C} = \frac{1}{j2x1/4} = -j2$$

$$V_1 = \frac{2}{2-j2} V \text{ (6) = 3+j3 = 4.243∠45°}$$

Thus,

$v_1(t)$ = **4.243cos(2t+45°) volts**.

To get $v_2(t)$, consider the circuit below,

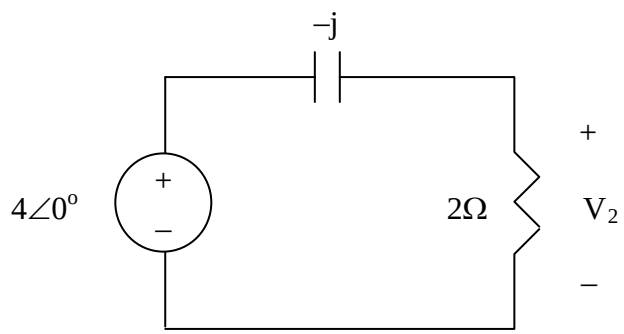

$$1/4F \longrightarrow 1/j\omega C = \frac{1}{j4x1/4} = -j1$$

$$V_2 = \frac{2}{2-j}(4) = 3.2 + j11.6 = 3.578\angle 26.56^\circ$$ or

$v_2(t) = 3.578\sin(4t+25.56°)$ volts.

Hence,

v_o = **[4.243cos(2t+45˚) + 3.578sin(4t+25.56˚)] volts**.

www.konkur.in

Chapter 10, Solution 42.

Using Fig. 10.87, design a problem to help other students to better understand the superposition theorem.

Although there are many ways to work this problem, this is an example based on the same kind of problem asked in the third edition.

Problem

Solve for I_o in the circuit of Fig. 10.87.

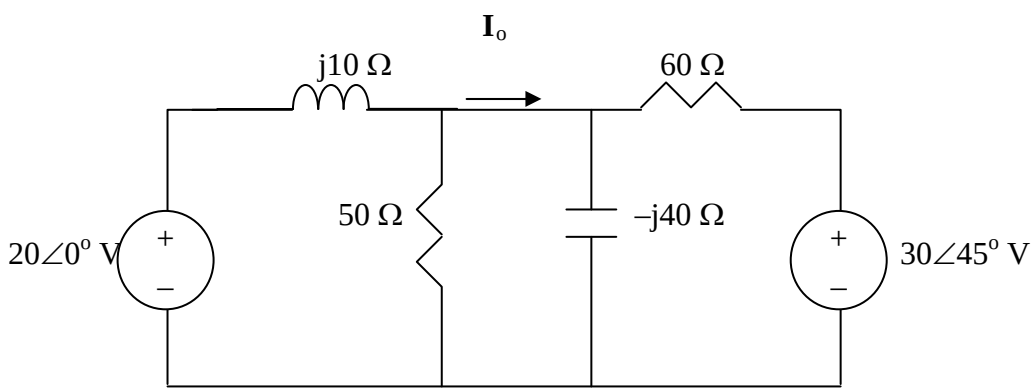

Figure 10.87 For Prob. 10.42.

Solution

Let $I_o = I_1 + I_2$

where I_1 and I_2 are due to 20<0° and 30<45° sources respectively. To get I_1, we use the circuit below.

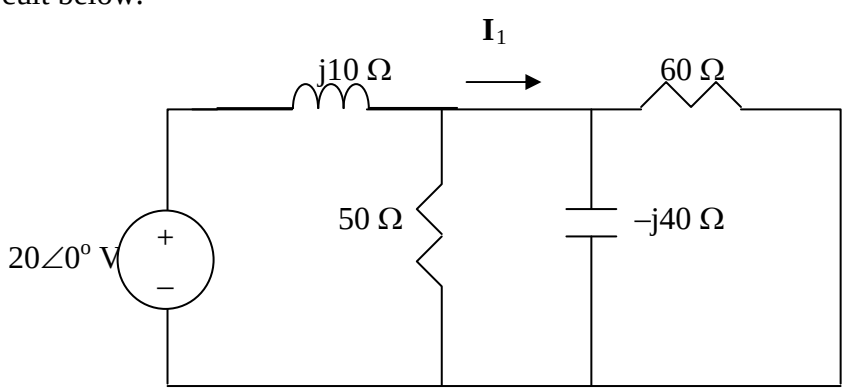

Let Z_1 = -j40//60 = 18.4615 –j27.6927, Z_2 = j10//50=1.9231 + j9.615

Transforming the voltage source to a current source leads to the circuit below.

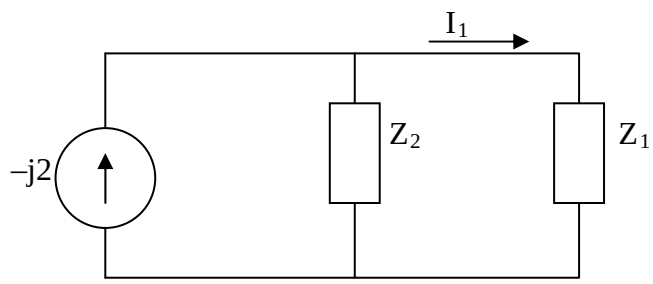

Using current division,

$$I_1 = \frac{Z_2}{Z_1 + Z_2}(-j2) = 0.6217 + j0.3626$$

To get I_2, we use the circuit below.

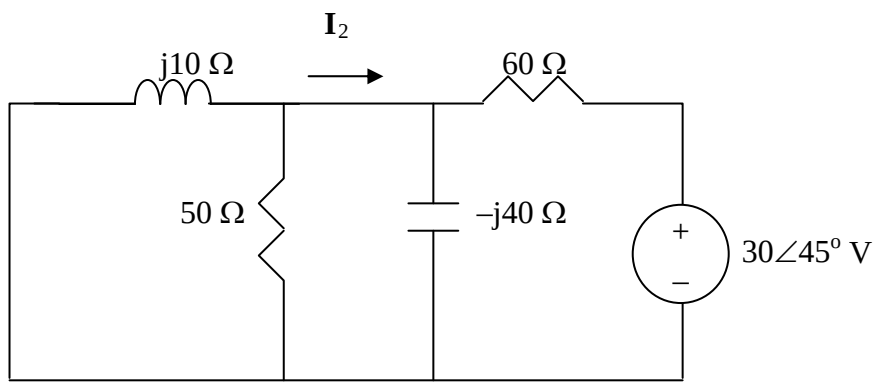

After transforming the voltage source, we obtain the circuit below.

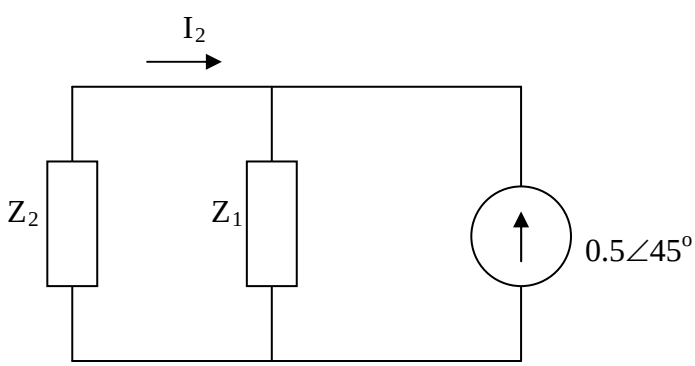

Using current division,

$$I_2 = \frac{-Z_1}{Z_1 + Z_2}(0.5 < 45^o) = -0.5275 - j0.3077$$

www.konkur.in

Hence, $\mathbf{I_o} = \mathbf{I_1} + \mathbf{I_2} = 0.0942+j0.0509 = \mathbf{109\angle 30°\ mA}$.

Chapter 10, Solution 43. Let $\mathbf{I}_x = \mathbf{I}_1 + \mathbf{I}_2$, where $\mathbf{I}_1$ is due to the voltage source and $\mathbf{I}_2$ is due to the current source.

$$\omega = 2$$
$$5\cos(2t + 10°) \longrightarrow 5\angle 10°$$
$$10\cos(2t - 60°) \longrightarrow 10\angle -60°$$
$$4\text{ H} \longrightarrow j\omega L = j8$$
$$\frac{1}{8}\text{ F} \longrightarrow \frac{1}{j\omega C} = \frac{1}{j(2)(1/8)} = -j4$$

For $\mathbf{I}_1$, consider the circuit in Fig. (a).

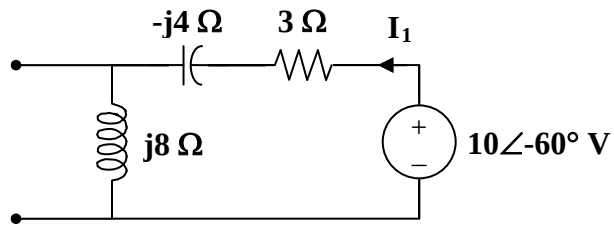

(a)

$$\mathbf{I}_1 = \frac{10\angle -60°}{3 + j8 - j4} = \frac{10\angle -60°}{3 + j4}$$

For $\mathbf{I}_2$, consider the circuit in Fig. (b).

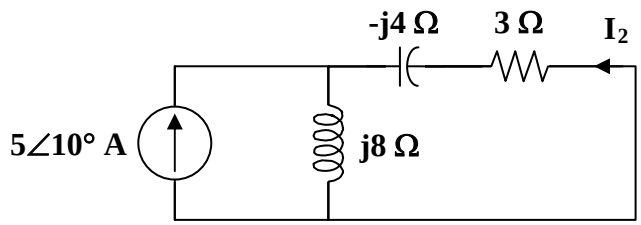

(b)

$$\mathbf{I}_2 = \frac{-j8}{3 + j8 - j4}(5\angle 10°) = \frac{-j40\angle 10°}{3 + j4}$$

$$\mathbf{I}_x = \mathbf{I}_1 + \mathbf{I}_2 = \frac{1}{3 + j4}(10\angle -60° - j40\angle 10°)$$
$$\mathbf{I}_x = \frac{49.51\angle -76.04°}{5\angle 53.13°} = 9.902\angle -129.17°$$

Therefore, $i_x =$ **9.902 cos(2t – 129.17°) A**

www.konkur.in

Chapter 10, Solution 44.

Let $v_x = v_1 + v_2$, where v_1 and v_2 are due to the current source and voltage source respectively.

For v_1, $\omega = 6$, $5\,H \longrightarrow j\omega L = j30$

The frequency-domain circuit is shown below.

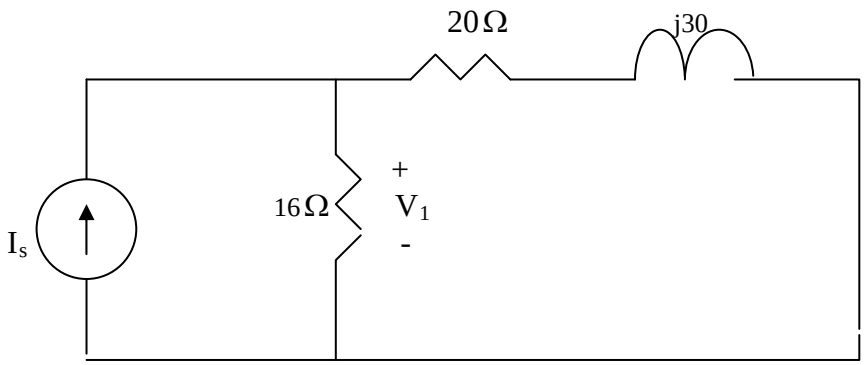

Let $Z = 16//(20 + j30) = \dfrac{16(20 + j30)}{36 + j30} = 11.8 + j3.497 = 12.31\angle 16.5^o$

$V_1 = I_s Z = (12\angle 10^o)(12.31\angle 16.5^o) = 147.7\angle 26.5^o \longrightarrow v_1 = 147.7\cos(6t + 26.5^o)$ V

For v_2, $\omega = 2$, $5\,H \longrightarrow j\omega L = j10$

The frequency-domain circuit is shown below.

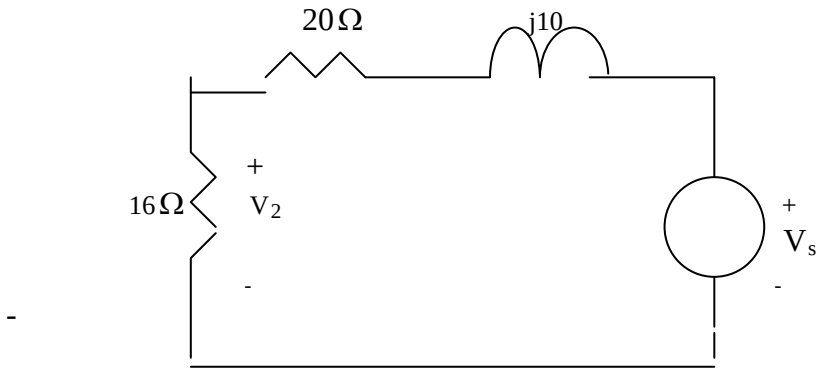

Using voltage division,

www.konkur.in

$$V_2 = \frac{16}{16+20+j10} V_s = \frac{16(50\angle 0^o)}{36+j10} = 21.41\angle -15.52^o \longrightarrow v_2 = 21.41\sin(2t - 15.52^o)\ V$$

Thus,

$$v_x = \mathbf{[147.7\cos(6t+26.5°)+21.41\sin(2t–15.52°)]\ V}$$

Chapter 10, Solution 45.

Let $i = i_1 + i_2$, where i_1 and i_2 are due to 16cos(10t +30°) and 6sin4t sources respectively. To find i_1 , consider the circuit below.

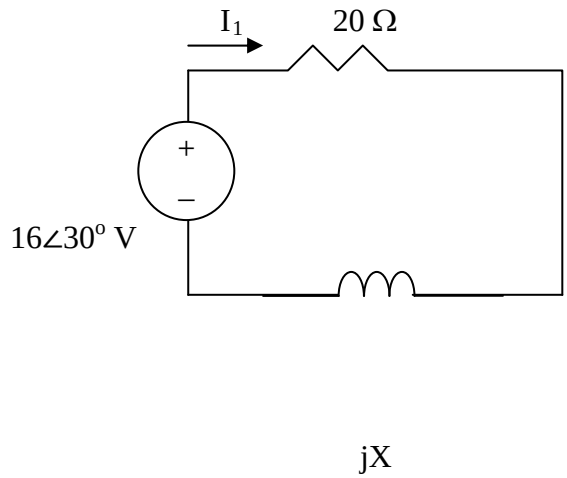

$$X = \omega L = 10x300x10^{-3} = 3$$

Type equation here.

$$I_1 = \frac{16\angle 30^\circ}{20 + j3} = \frac{16\angle 30^\circ}{20.22\angle 8.53^\circ} = 0.7913\angle 21.47^\circ$$

$i_1(t)$ = 791.1cos(10t+21.47°) mA.

To find $i_2(t)$, consider the circuit below,

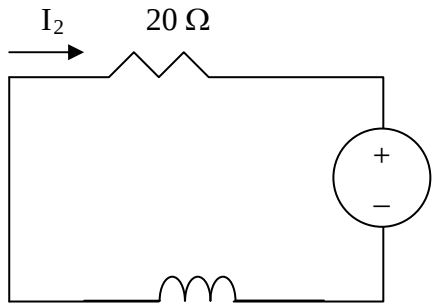

www.konkur.in

$6\angle 0^{o}$ V

jX

$$X = \omega L = 4x300x10^{-3} = 1.2$$

$$I_2 = -\frac{6\angle 0^\circ}{20 + j1.2} = \frac{6\angle 180^\circ}{20.036\angle 3.43^\circ} = 0.2995\angle 176.57^\circ \text{ or}$$

$i_2(t) = 299.5\sin(4t+176.57°)$ mA.

Thus,

$i(t) = i_1(t) + i_2(t) =$ **[791.1cos(10t+21.47°) + 299.5sin(4t+176.57°)] mA**.

www.konkur.in

Chapter 10, Solution 46.

Let $v_o = v_1 + v_2 + v_3$, where v_1, v_2, and v_3 are respectively due to the 10-V dc source, the ac current source, and the ac voltage source. For v_1 consider the circuit in Fig. (a).

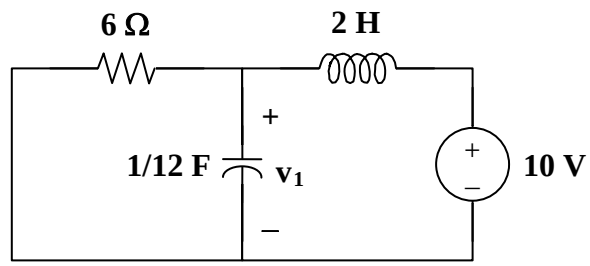

(a)

The capacitor is open to dc, while the inductor is a short circuit. Hence,

$$v_1 = 10 \text{ V}$$

For v_2, consider the circuit in Fig. (b).

$$\omega = 2$$

$$2 \text{ H} \longrightarrow j\omega L = j4$$

$$\frac{1}{12} \text{ F} \longrightarrow \frac{1}{j\omega C} = \frac{1}{j(2)(1/12)} = -j6$$

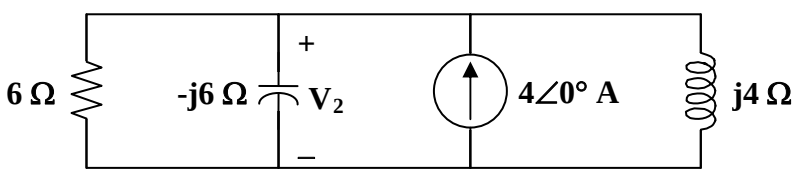

(b)

Applying nodal analysis,

$$4 = \frac{\mathbf{V}_2}{6} + \frac{\mathbf{V}_2}{-j6} + \frac{\mathbf{V}_2}{j4} = \left(\frac{1}{6} + \frac{j}{6} - \frac{j}{4}\right)\mathbf{V}_2$$

$$\mathbf{V}_2 = \frac{24}{1 - j0.5} = 21.45\angle 26.56°$$

Hence, $$v_2 = 21.45\sin(2t + 26.56°) \text{ V}$$

For v_3, consider the circuit in Fig. (c).

$$\omega = 3$$

www.konkur.in

$$2\text{ H} \longrightarrow j\omega L = j6$$

$$\frac{1}{12}\text{ F} \longrightarrow \frac{1}{j\omega C} = \frac{1}{j(3)(1/12)} = -j4$$

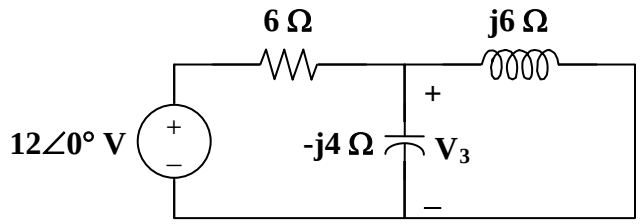

(c)

At the non-reference node,

$$\frac{12 - \mathbf{V}_3}{6} = \frac{\mathbf{V}_3}{-j4} + \frac{\mathbf{V}_3}{j6}$$

$$\mathbf{V}_3 = \frac{12}{1 + j0.5} = 10.73\angle -26.56°$$

Hence, $v_3 = 10.73\cos(3t - 26.56°)$ V

Therefore,

$$v_o = \mathbf{[10+21.45\sin(2t+26.56°)+10.73\cos(3t-26.56°)]\ V}$$

www.konkur.in

Chapter 10, Solution 47.

Let $i_o = i_1 + i_2 + i_3$, where i_1, i_2, and i_3 are respectively due to the 24-V dc source, the ac voltage source, and the ac current source. For i_1, consider the circuit in Fig. (a).

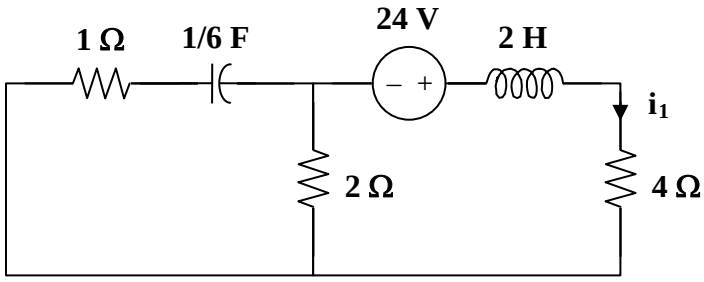

(a)

Since the capacitor is an open circuit to dc,

$$i_1 = \frac{24}{4+2} = 4 \text{ A}$$

For i_2, consider the circuit in Fig. (b).

$$\omega = 1$$

$$2 \text{ H} \longrightarrow j\omega L = j2$$

$$\frac{1}{6} \text{ F} \longrightarrow \frac{1}{j\omega C} = -j6$$

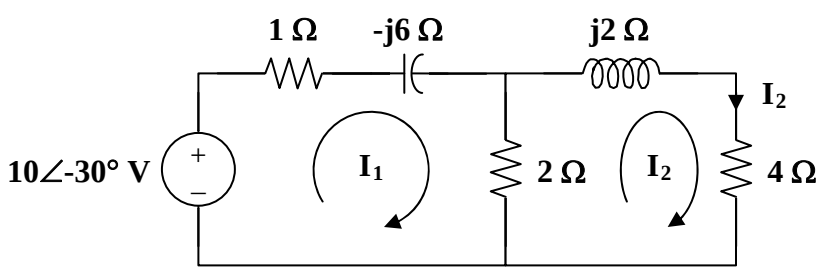

(b)

For mesh 1,

$$-10\angle -30° + (3 - j6)\mathbf{I}_1 - 2\mathbf{I}_2 = 0$$

$$10\angle -30° = 3(1 - 2j)\mathbf{I}_1 - 2\mathbf{I}_2 \qquad (1)$$

For mesh 2,

$$0 = -2\mathbf{I}_1 + (6 + j2)\mathbf{I}_2$$

$$\mathbf{I}_1 = (3 + j)\mathbf{I}_2 \qquad (2)$$

Substituting (2) into (1)

$$10\angle -30° = 13 - j15\mathbf{I}_2$$
$$\mathbf{I}_2 = 0.504\angle 19.1°$$

Hence, $\quad i_2 = 0.504\sin(t + 19.1°)$ A

For i_3, consider the circuit in Fig. (c).

$$\omega = 3$$
$$2\text{ H} \longrightarrow j\omega L = j6$$
$$\frac{1}{6}\text{ F} \longrightarrow \frac{1}{j\omega C} = \frac{1}{j(3)(1/6)} = -j2$$

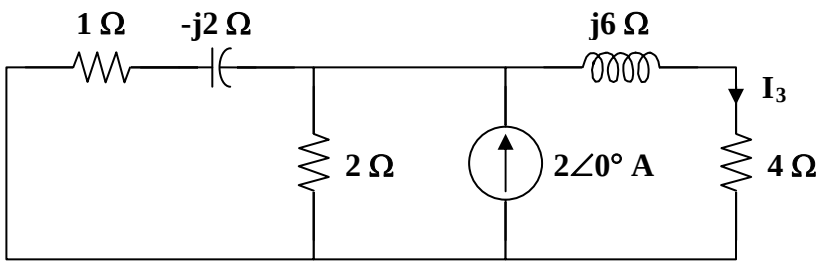

(c)

$$2 \parallel (1 - j2) = \frac{2(1 - j2)}{3 - j2}$$

Using current division,

$$\mathbf{I}_3 = \frac{\dfrac{2(1 - j2)}{3 - j2}\cdot(2\angle 0°)}{4 + j6 + \dfrac{2(1 - j2)}{3 - j2}} = \frac{2(1 - j2)}{13 + j3}$$
$$\mathbf{I}_3 = 0.3352\angle -76.43°$$

Hence $\quad i_3 = 0.3352\cos(3t - 76.43°)$ A

Therefore, $\quad i_o =$ **[4 + 0.504 sin(t + 19.1°) + 0.3352 cos(3t – 76.43°)] A**

www.konkur.in

Chapter 10, Solution 48.

Let $i_O = i_{O1} + i_{O2} + i_{O3}$, where i_{O1} is due to the ac voltage source, i_{O2} is due to the dc voltage source, and i_{O3} is due to the ac current source. For i_{O1}, consider the circuit in Fig. (a).

$$\omega = 2000$$

$$50\cos(2000t) \longrightarrow 50\angle 0°$$

$$40 \text{ mH} \longrightarrow j\omega L = j(2000)(40\times 10^{-3}) = j80$$

$$20\ \mu\text{F} \longrightarrow \frac{1}{j\omega C} = \frac{1}{j(2000)(20\times 10^{-6})} = -j25$$

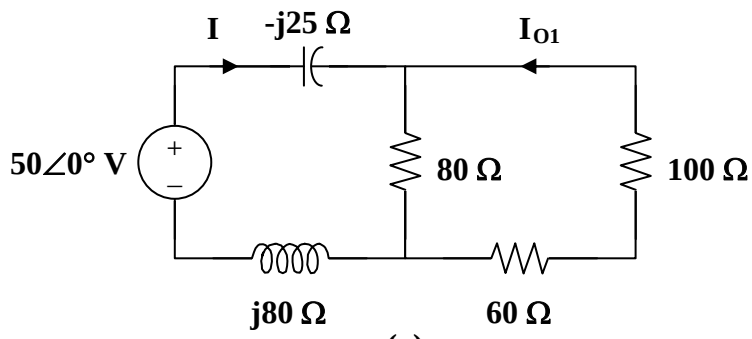

(a)

$$80 \,||\, (60+100) = 160/3$$

$$\mathbf{I} = \frac{50}{160/3 + j80 - j25} = \frac{30}{32 + j33}$$

Using current division,

$$\mathbf{I}_{O1} = \frac{-80\,\mathbf{I}}{80+160} = \frac{-1}{3}\mathbf{I} = \frac{10\angle 180°}{46\angle 45.9°}$$

$$\mathbf{I}_{O1} = 0.217\angle 134.1°$$

Hence, $\quad i_{O1} = 0.217\cos(2000t + 134.1°)$ A

For i_{O2}, consider the circuit in Fig. (b).

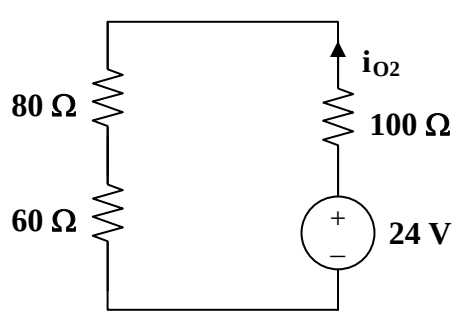

(b)

$$i_{O2} = \frac{24}{80+60+100} = 0.1\text{ A}$$

For i_{O3}, consider the circuit in Fig. (c).

$$\omega = 4000$$

$$2\cos(4000t) \longrightarrow 2\angle 0°$$

$$40\text{ mH} \longrightarrow j\omega L = j(4000)(40\times 10^{-3}) = j160$$

$$20\ \mu\text{F} \longrightarrow \frac{1}{j\omega C} = \frac{1}{j(4000)(20\times 10^{-6})} = -j12.5$$

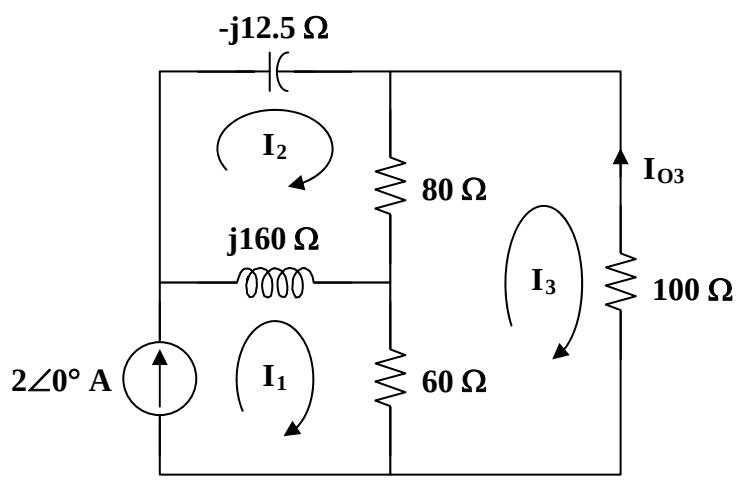

(c)

`

For mesh 1,

$$\mathbf{I}_1 = 2 \qquad (1)$$

For mesh 2,

$$(80 + j160 - j12.5)\mathbf{I}_2 - j160\mathbf{I}_1 - 80\mathbf{I}_3 = 0$$

Simplifying and substituting (1) into this equation yields

$$(8 + j14.75)\mathbf{I}_2 - 8\mathbf{I}_3 = j32 \qquad (2)$$

For mesh 3,

$$240\mathbf{I}_3 - 60\mathbf{I}_1 - 80\mathbf{I}_2 = 0$$

Simplifying and substituting (1) into this equation yields

$$\mathbf{I}_2 = 3\mathbf{I}_3 - 1.5 \qquad (3)$$

www.konkur.in

Substituting (3) into (2) yields

$$(16 + j44.25)\mathbf{I}_3 = 12 + j54.125$$

$$\mathbf{I}_3 = \frac{12 + j54.125}{16 + j44.25} = 1.1782\angle 7.38°$$

$$\mathbf{I}_{O3} = -\mathbf{I}_3 = -1.1782\angle 7.38°$$

Hence, $i_{O3} = -1.1782\sin(4000t + 7.38°)$ A

Therefore,

$$i_O = \mathbf{\{0.1 + 0.217\cos(2000t + 134.1°) - 1.1782\sin(4000t + 7.38°)\}\ A}$$

www.konkur.in

Chapter 10, Solution 49.

$$8\sin(200t+30°) \longrightarrow 8\angle 30°, \quad \omega = 200$$
$$5\text{ mH} \longrightarrow j\omega L = j(200)(5\times 10^{-3}) = j$$
$$1\text{ mF} \longrightarrow \frac{1}{j\omega C} = \frac{1}{j(200)(1\times 10^{-3})} = -j5$$

After transforming the current source, the circuit becomes that shown in the figure below.

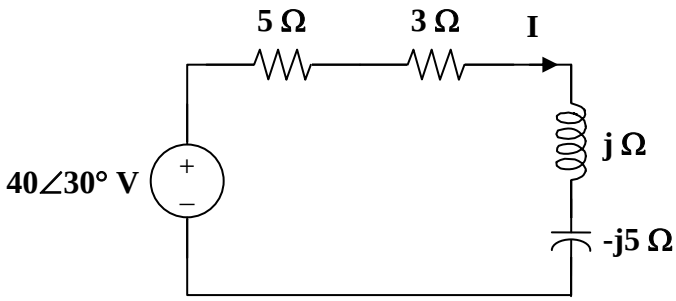

$$\mathbf{I} = \frac{40\angle 30°}{5+3+j-j5} = \frac{40\angle 30°}{8-j4} = 4.472\angle 56.56°$$

i = **[4.472sin(200t+56.56°)] A**

Chapter 10, Solution 50.

Using Fig. 10.95, design a problem to help other students to better understand source transformation.

Although there are many ways to work this problem, this is an example based on the same kind of problem asked in the third edition.

Problem

Use source transformation to find v_o in the circuit in Fig. 10.95.

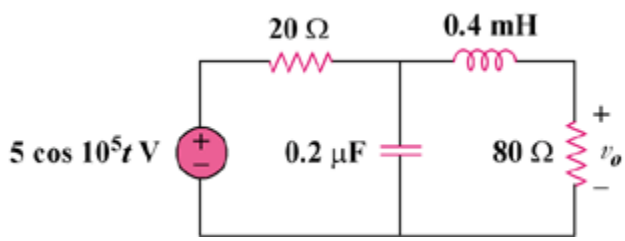

Figure 10.95

Solution

$$5\cos(10^5 t) \longrightarrow 5\angle 0°, \quad \omega = 10^5$$

$$0.4 \text{ mH} \longrightarrow j\omega L = j(10^5)(0.4\times 10^{-3}) = j40$$

$$0.2\ \mu\text{F} \longrightarrow \frac{1}{j\omega C} = \frac{1}{j(10^5)(0.2\times 10^{-6})} = -j50$$

After transforming the voltage source, we get the circuit in Fig. (a).

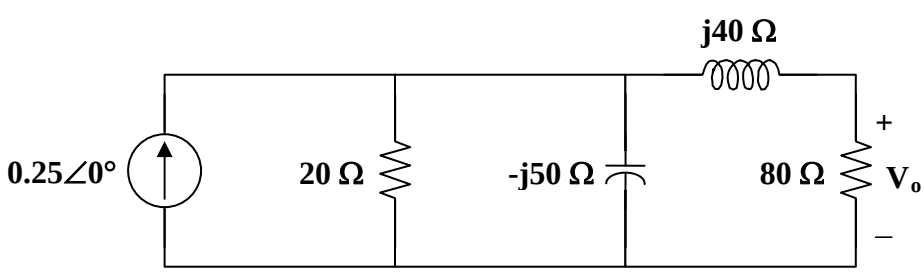

(a)

Let $\quad \mathbf{Z} = 20 \,||\, -j50 = \dfrac{-j100}{2-j5}$

and $\quad \mathbf{V}_s = (0.25\angle 0°)\,\mathbf{Z} = \dfrac{-j25}{2-j5}$

www.konkur.in

With these, the current source is transformed to obtain the circuit in Fig.(b).

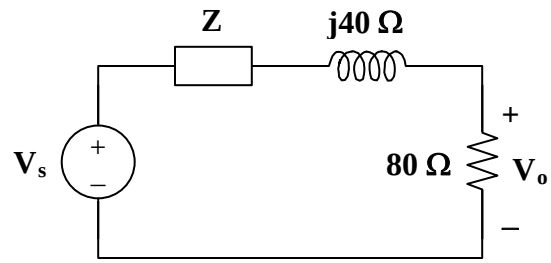

(b)

By voltage division,

$$\mathbf{V}_o = \frac{80}{\mathbf{Z} + 80 + j40}\mathbf{V}_s = \frac{80}{\frac{-j100}{2-j5} + 80 + j40} \cdot \frac{-j25}{2-j5}$$

$$\mathbf{V}_o = \frac{8(-j25)}{36-j42} = 3.615\angle -40.6°$$

Therefore, $v_o =$ **3.615 cos(10^5 t – 40.6°) V**

www.konkur.in

Chapter 10, Solution 51.

There are many ways to create this problem, here is one possible solution. Let V_1 =

$40\angle 30°$ V, $X_L = 10\ \Omega$, $X_C = 20\ \Omega$, $R_1 = R_2 = 80\ \Omega$, and $V_2 = 50$ V.

If we let the voltage across the capacitor be equal to V_x, then

$\mathbf{I_o} = [\mathbf{V_x}/(-j20)] + [(\mathbf{V_x}-50)/80] = (0.0125+j0.05)\mathbf{V_x} - 0.625 = (0.051539\angle 75.96°)\mathbf{V_x} -$

0.625.

The following circuit is obtained by transforming the voltage sources.

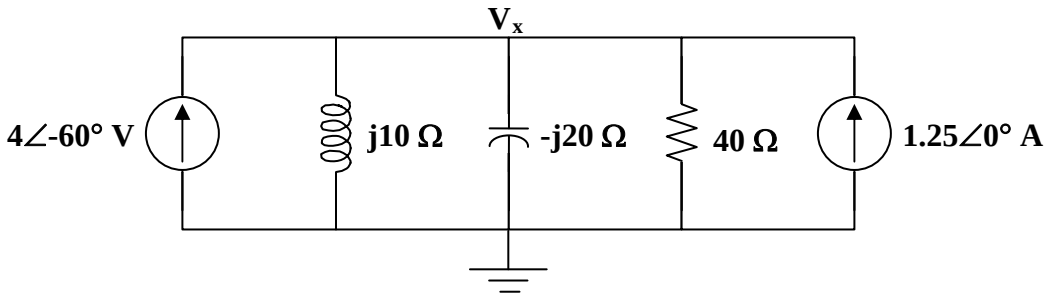

$\mathbf{V_x} = (4\angle -60°+1.25)/(-j0.1+j0.05+0.025) = (2-j3.4641+1.25)/(0.025-j0.05)$

$= (3.25-j3.4641)/(\ 0.025-j0.05) = (4.75\angle -46.826°)/(0.055902\angle -63.435°)$

$= 84.97\angle 16.609°$ V.

Therefore,

www.konkur.in

$\mathbf{I_o} = (0.051539\angle 75.96°)(84.97\angle 16.609°) - 0.625 = 4.3793\angle 92.569° - 0.625$

$= -0.196291 + j4.3749 - 0.625 = -0.821291 + j4.3749 =$ **$4.451\angle 100.63°$ A**.

www.konkur.in

Chapter 10, Solution 52.

We transform the voltage source to a current source.

$$\mathbf{I}_s = \frac{60\angle 0°}{2 + j4} = 6 - j12$$

The new circuit is shown in Fig. (a).

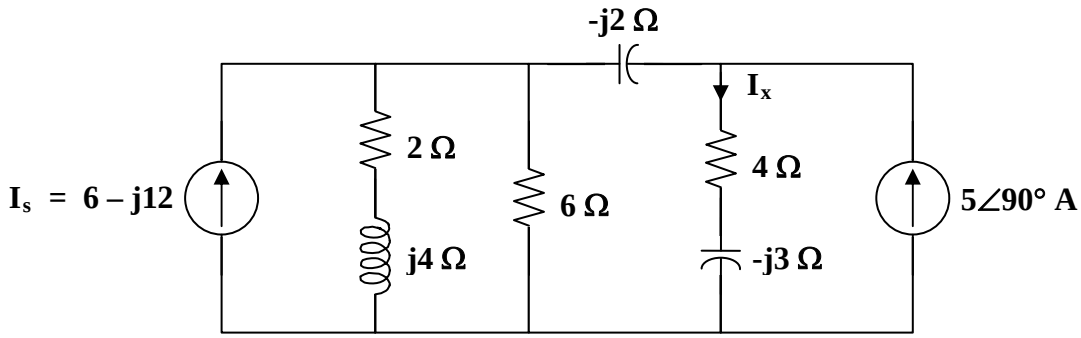

(a)

Let $$\mathbf{Z}_s = 6 \,||\, (2 + j4) = \frac{6(2 + j4)}{8 + j4} = 2.4 + j1.8$$

$$\mathbf{V}_s = \mathbf{I}_s \mathbf{Z}_s = (6 - j12)(2.4 + j1.8) = 36 - j18 = 18(2 - j)$$

With these, we transform the current source on the left hand side of the circuit to a voltage source. We obtain the circuit in Fig. (b).

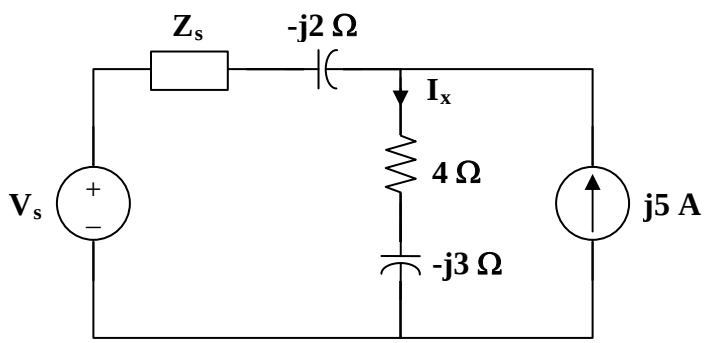

(b)

Let $$\mathbf{Z}_o = \mathbf{Z}_s - j2 = 2.4 - j0.2 = 0.2(12 - j)$$

$$\mathbf{I}_o = \frac{\mathbf{V}_s}{\mathbf{Z}_o} = \frac{18(2 - j)}{0.2(12 - j)} = 15.517 - j6.207$$

www.konkur.in

With these, we transform the voltage source in Fig. (b) to a current source. We obtain the circuit in Fig. (c).

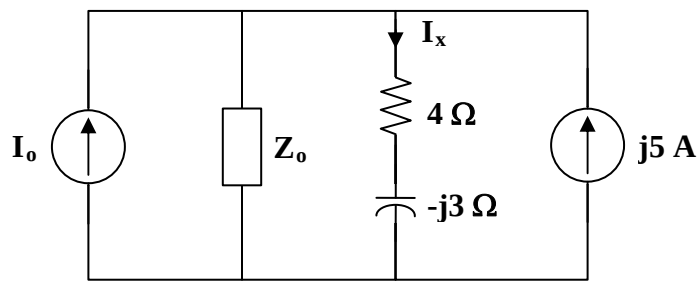

(c)

Using current division,

$$\mathbf{I}_x = \frac{\mathbf{Z}_o}{\mathbf{Z}_o + 4 - j3}(\mathbf{I}_o + j5) = \frac{2.4 - j0.2}{6.4 - j3.2}(15.517 - j1.207)$$

$$\mathbf{I}_x = 5 + j1.5625 = \mathbf{5.238\angle 17.35°\ A}$$

www.konkur.in

Chapter 10, Solution 53.

We transform the voltage source to a current source to obtain the circuit in Fig. (a).

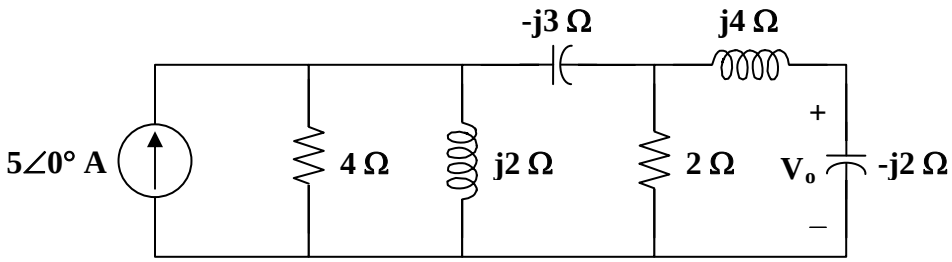

(a)

Let $\mathbf{Z}_s = 4 \,||\, j2 = \dfrac{j8}{4+j2} = 0.8 + j1.6$

$\mathbf{V}_s = (5\angle 0°)\,\mathbf{Z}_s = (5)(0.8 + j1.6) = 4 + j8$

With these, the current source is transformed so that the circuit becomes that shown in Fig. (b).

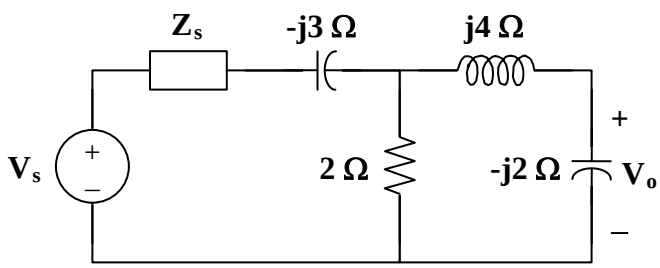

(b)

Let $\mathbf{Z}_x = \mathbf{Z}_s - j3 = 0.8 - j1.4$

$\mathbf{I}_x = \dfrac{\mathbf{V}_s}{\mathbf{Z}_s} = \dfrac{4 + j8}{0.8 - j1.4} = -3.0769 + j4.6154$

With these, we transform the voltage source in Fig. (b) to obtain the circuit in Fig. (c).

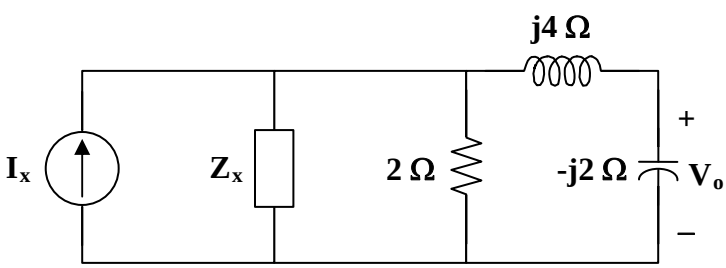

(c)

Let $\mathbf{Z}_y = 2 \,||\, \mathbf{Z}_x = \dfrac{1.6 - j2.8}{2.8 - j1.4} = 0.8571 - j0.5714$

www.konkur.in

$$\mathbf{V}_y = \mathbf{I}_x\,\mathbf{Z}_y = (-3.0769 + j4.6154)\cdot(0.8571 - j0.5714) = j5.7143$$

With these, we transform the current source to obtain the circuit in Fig. (d).

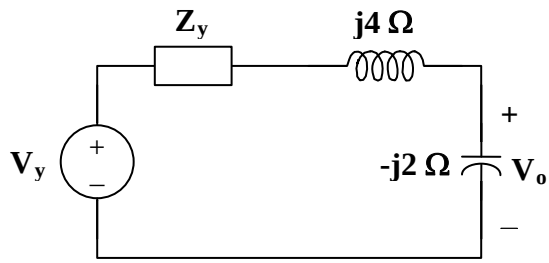

(d)

Using current division,

$$\mathbf{V}_o = \frac{-j2}{\mathbf{Z}_y + j4 - j2}\mathbf{V}_y = \frac{-j2\,(j5.7143)}{0.8571 - j0.5714 + j4 - j2} = \mathbf{(3.529 - j5.883)\ V}$$

www.konkur.in

Chapter 10, Solution 54.

$$50//(-j30) = \frac{50x(-j30)}{50-j30} = 13.24 - j22.059$$

We convert the current source to voltage source and obtain the circuit below.

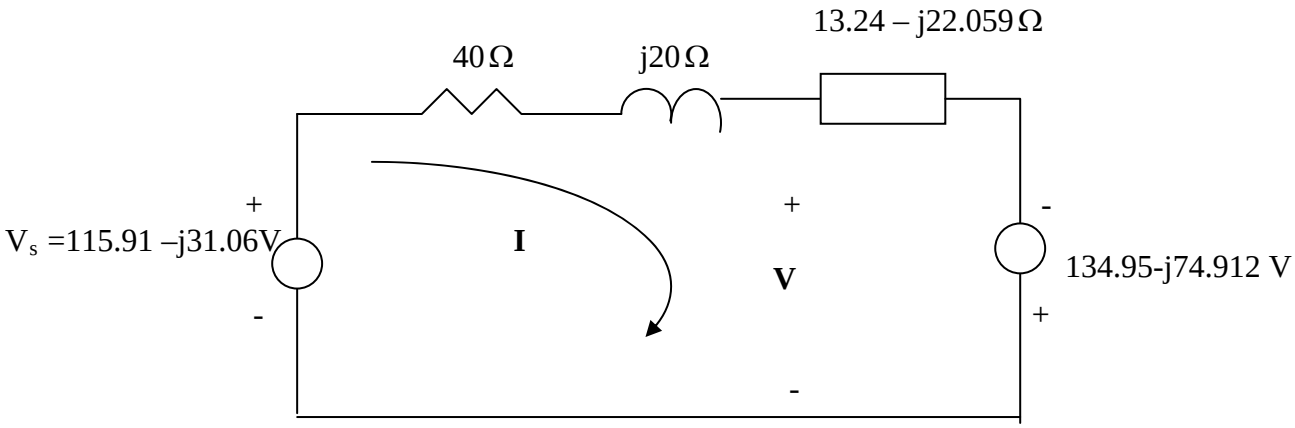

Applying KVL gives

-115.91 + j31.058 + (53.24-j2.059)I -134.95 + j74.912 = 0

or $I = \dfrac{-250.86 + j105.97}{53.24 - j2.059} = -4.7817 + j1.8055$

But $-V_s + (40 + j20)I + V = 0 \longrightarrow V = V_s - (40 + j20)I$

$$\boldsymbol{V = 115.91 - j31.05 - (40 + j20)(-4.7817 + j1.8055) = \underline{124.06\angle -154^o\ \mathrm{V}}}$$

which agrees with the result in Prob. 10.7.

www.konkur.in

Chapter 10, Solution 55.

(a) To find $\mathbf{Z}_{th}$, consider the circuit in Fig. (a).

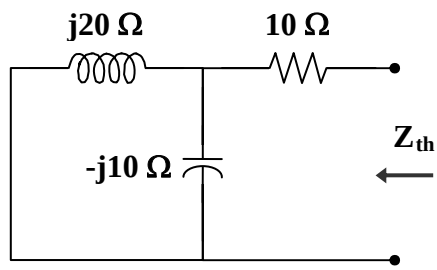

(a)

$$\mathbf{Z}_N = \mathbf{Z}_{th} = 10 + j20 \,||\, (-j10) = 10 + \frac{(j20)(-j10)}{j20 - j10}$$
$$= 10 - j20 = \mathbf{22.36\angle\text{-}63.43°\ \Omega}$$

To find $\mathbf{V}_{th}$, consider the circuit in Fig. (b).

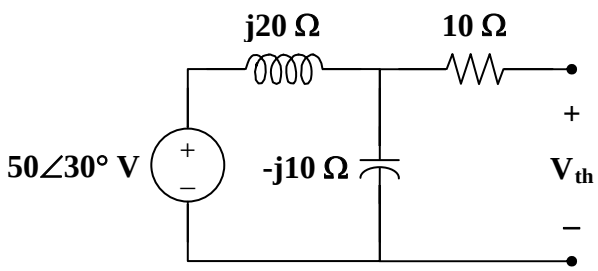

(b)

$$\mathbf{V}_{th} = \frac{-j10}{j20 - j10}(50\angle 30°) = \mathbf{-50\angle 30°\ V}$$

$$\mathbf{I}_N = \frac{\mathbf{V}_{th}}{\mathbf{Z}_{th}} = \frac{-50\angle 30°}{22.36\angle -63.43°} = \mathbf{2.236\angle 273.4°\ A}$$

(b) To find $\mathbf{Z}_{th}$, consider the circuit in Fig. (c).

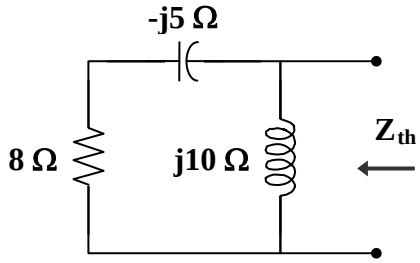

(c)

www.konkur.in

$$\mathbf{Z}_N = \mathbf{Z}_{th} = j10 \,||\, (8 - j5) = \frac{(j10)(8 - j5)}{j10 + 8 - j5} = \mathbf{10\angle 26° \ \Omega}$$

To obtain $\mathbf{V}_{th}$, consider the circuit in Fig. (d).

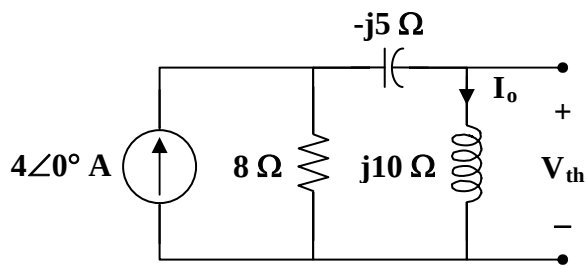

(d)

By current division,

$$\mathbf{I}_o = \frac{8}{8 + j10 - j5}(4\angle 0°) = \frac{32}{8 + j5}$$

$$\mathbf{V}_{th} = j10\,\mathbf{I}_o = \frac{j320}{8 + j5} = \mathbf{33.92\angle 58° \ V}$$

$$\mathbf{I}_N = \frac{\mathbf{V}_{th}}{\mathbf{Z}_{th}} = \frac{33.92\angle 58°}{10\angle 26°} = \mathbf{3.392\angle 32° \ A}$$

Chapter 10, Solution 56.

(a) To find $\mathbf{Z}_{th}$, consider the circuit in Fig. (a).

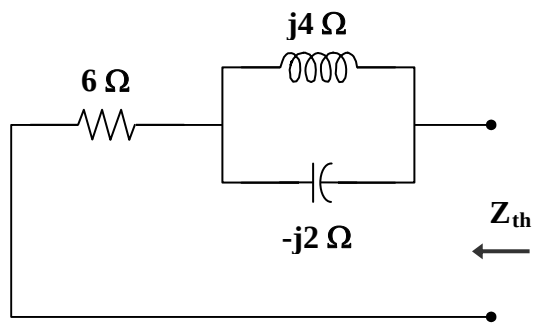

(a)

$$\mathbf{Z}_N = \mathbf{Z}_{th} = 6 + j4 \,||\, (-j2) = 6 + \frac{(j4)(-j2)}{j4 - j2} = 6 - j4$$
$$= \mathbf{7.211\angle\text{-}33.69°\ \Omega}$$

By placing short circuit at terminals a-b, we obtain,
$\mathbf{I}_N = \mathbf{2\angle 0°\ A}$

$$\mathbf{V}_{th} = \mathbf{Z}_{th}\,\mathbf{I}_{th} = (7.211\angle -33.69°)(2\angle 0°) = \mathbf{14.422\angle\text{-}33.69°\ V}$$

(b) To find $\mathbf{Z}_{th}$, consider the circuit in Fig. (b).

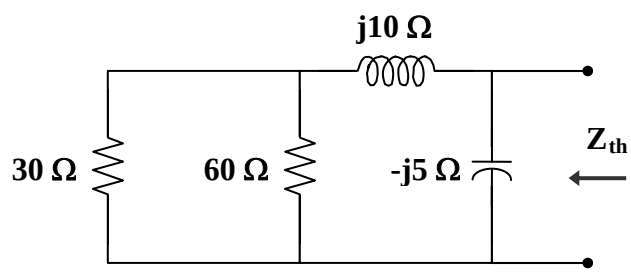

(b)

$30 \,||\, 60 = 20$

$$\mathbf{Z}_N = \mathbf{Z}_{th} = -j5 \,||\, (20 + j10) = \frac{(-j5)(20 + j10)}{20 + j5}$$
$$= \mathbf{5.423\angle\text{-}77.47°\ \Omega}$$

www.konkur.in

To find $\mathbf{V}_{th}$ and $\mathbf{I}_N$, we transform the voltage source and combine the 30 Ω and 60 Ω resistors. The result is shown in Fig. (c).

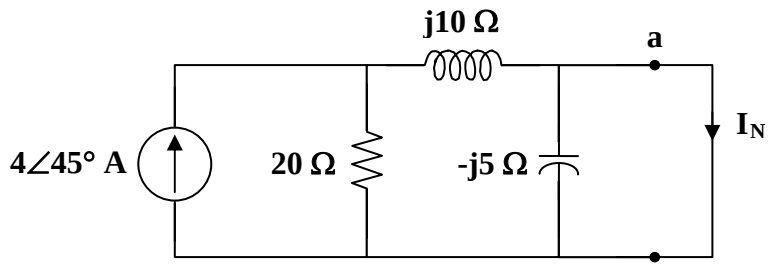

(c)

$$\mathbf{I}_N = \frac{20}{20 + j10}(4\angle 45°) = \frac{2}{5}(2 - j)(4\angle 45°)$$
$$= \mathbf{3.578\angle 18.43°\ A}$$

$$\mathbf{V}_{th} = \mathbf{Z}_{th}\,\mathbf{I}_N = (5.423\angle -77.47°)(3.578\angle 18.43°)$$
$$= \mathbf{19.4\angle -59°\ V}$$

www.konkur.in

Chapter 10, Solution 57.

Using Fig. 10.100, design a problem to help other students to better understand Thevenin and Norton equivalent circuits.

Although there are many ways to work this problem, this is an example based on the same kind of problem asked in the third edition.

Problem

Find the Thevenin and Norton equivalent circuits for the circuit shown in Fig. 10.100.

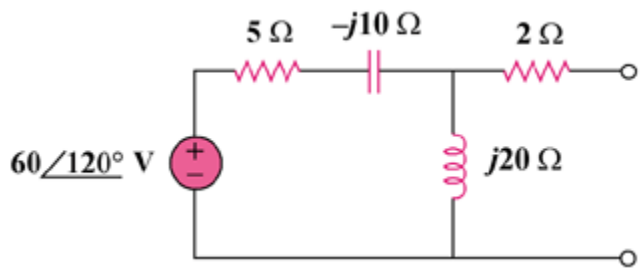

Figure 10.100

Solution

To find $\mathbf{Z}_{th}$, consider the circuit in Fig. (a).

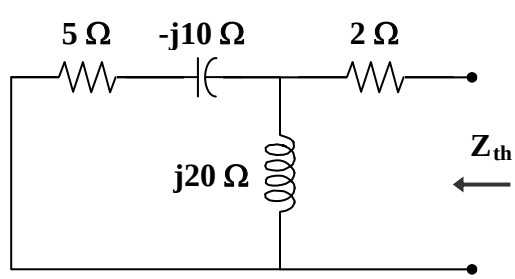

(a)

$$\mathbf{Z}_N = \mathbf{Z}_{th} = 2 + j20 \,||\, (5 - j10) = 2 + \frac{(j20)(5 - j10)}{5 + j10}$$

$$= 18 - j12 = \mathbf{21.633\angle\text{-}33.7°\ \Omega}$$

www.konkur.in

To find $\mathbf{V}_{th}$, consider the circuit in Fig. (b).

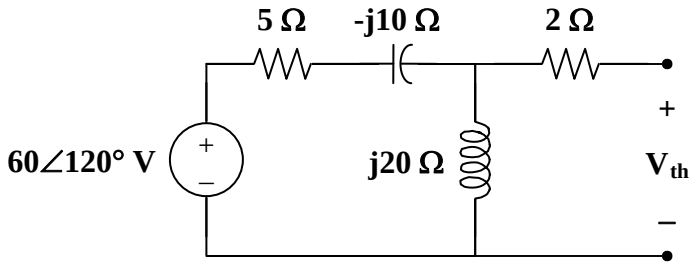

(b)

$$\mathbf{V}_{th} = \frac{j20}{5 - j10 + j20}(60\angle 120°) = \frac{j4}{1 + j2}(60\angle 120°)$$

$$= \mathbf{107.3\angle 146.56°\ V}$$

$$\mathbf{I}_N = \frac{\mathbf{V}_{th}}{\mathbf{Z}_{th}} = \frac{107.3\angle 146.56°}{21.633\angle -33.7°} = \mathbf{4.961\angle -179.7°\ A}$$

www.konkur.in

Chapter 10, Solution 58.

Consider the circuit in Fig. (a) to find $\mathbf{Z}_{eq}$.

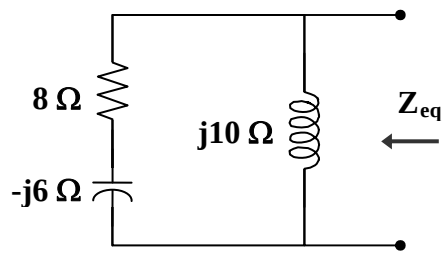

(a)

$$\mathbf{Z}_{eq} = j10 \parallel (8 - j6) = \frac{(j10)(8 - j6)}{8 + j4} = 5(2 + j)$$

$$= \mathbf{11.18\angle 26.56^\circ\ \Omega}$$

Consider the circuit in Fig. (b) to find V_{Thev}.

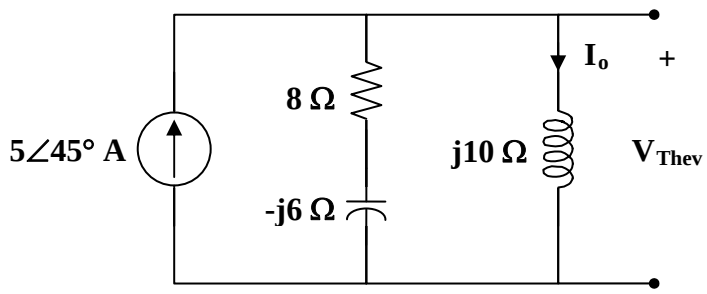

(b)

$$\mathbf{I}_o = \frac{8 - j6}{8 - j6 + j10}(5\angle 45^\circ) = \frac{4 - j3}{4 + j2}(5\angle 45^\circ)$$

$$\mathbf{V}_{Thev} = j10\mathbf{I}_o = \frac{(j10)(4 - j3)(5\angle 45^\circ)}{(2)(2 + j)}$$

$$= \mathbf{55.9\angle 71.56^\circ\ V}$$

www.konkur.in

Chapter 10, Solution 59.

Calculate the output impedance of the circuit shown in Fig. 10.102.

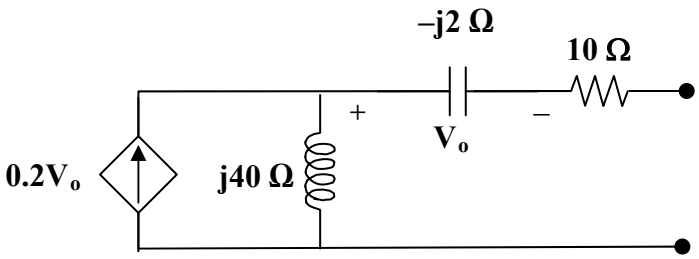

Figure 10.102
For Prob. 10.59.

Solution

Since there are no independent sources, we need to inject a current, best value is to make it 1 amp, into the terminals on the right and then to determine the voltage at the terminals.

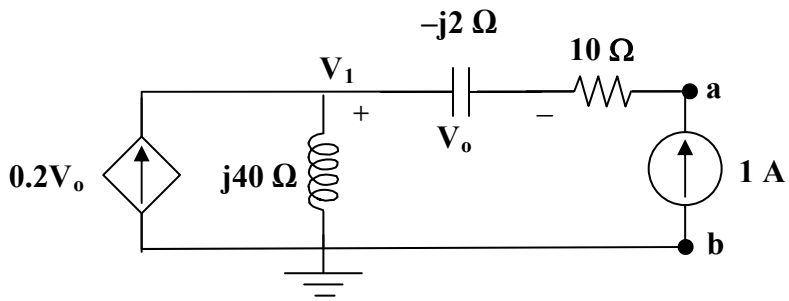

Clearly $\mathbf{V_o} = -(-j2) = j2$ and $\mathbf{V_1} = (0.2V_o + 1)j40 = (1+j0.4)j40 = -16+j40$ V.

Next, $\mathbf{V_{ab}} = 10 - j2 - 16 + j40 = -6+j38 = 38.47\angle 98.97°$ V or

$$\mathbf{Z_{eq} = (-6+j38)\ \Omega}.$$

www.konkur.in

Chapter 10, Solution 60.

(a) To find $\mathbf{Z}_{eq}$, consider the circuit in Fig. (a).

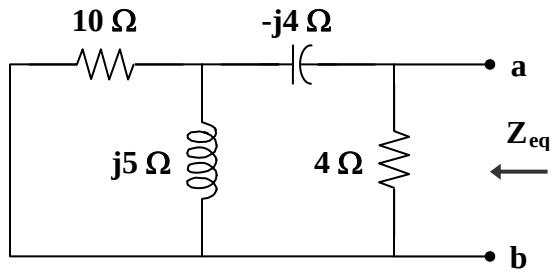

(a)

$$\mathbf{Z}_{eq} = 4 \,||\, (-j4 + 10 \,||\, j5) = 4 \,||\, (-j4 + 2 + j4)$$
$$\mathbf{Z}_{eq} = 4 \,||\, 2$$
$$= \mathbf{1.333\ \Omega}$$

To find $\mathbf{V}_{Thev}$, consider the circuit in Fig. (b).

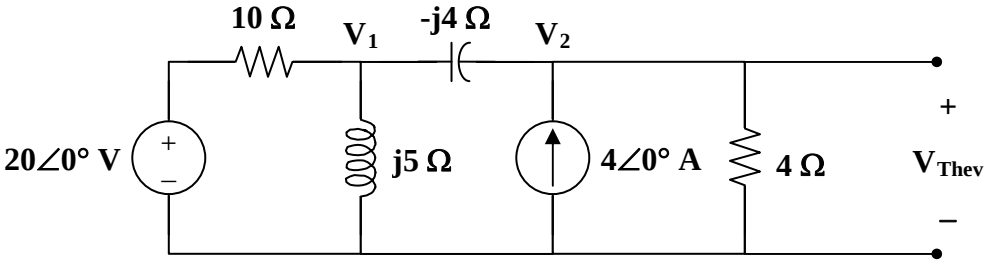

(b)

At node 1,

$$\frac{20 - \mathbf{V}_1}{10} = \frac{\mathbf{V}_1}{\text{j}5} + \frac{\mathbf{V}_1 - \mathbf{V}_2}{-\text{j}4}$$
$$(1 + \text{j}0.5)\mathbf{V}_1 - \text{j}2.5\mathbf{V}_2 = 20 \qquad (1)$$

At node 2,

$$4 + \frac{\mathbf{V}_1 - \mathbf{V}_2}{-\text{j}4} = \frac{\mathbf{V}_2}{4}$$
$$\mathbf{V}_1 = (1 - \text{j})\mathbf{V}_2 + \text{j}16 \qquad (2)$$

Substituting (2) into (1) leads to

$$28 - \text{j}16 = (1.5 - \text{j}3)\mathbf{V}_2$$
$$\mathbf{V}_2 = \frac{28 - \text{j}16}{1.5 - \text{j}3} = 8 + \text{j}5.333$$

www.konkur.in

Therefore,

$$\mathbf{V}_{Thev} = \mathbf{V}_2 = \underline{\mathbf{9.615\angle 33.69^\circ\ V}}$$

(b) To find $\mathbf{Z}_{eq}$, consider the circuit in Fig. (c).

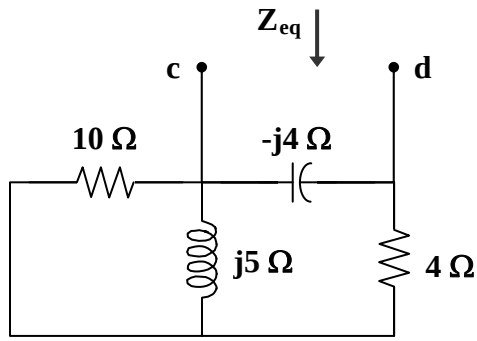

(c)

$$\mathbf{Z}_{eq} = -j4 \parallel (4 + 10 \parallel j5) = -j4 \parallel \left(4 + \frac{j10}{2+j}\right)$$

$$\mathbf{Z}_{eq} = -j4 \parallel (6 + j4) = \frac{-j4}{6}(6 + j4) = \mathbf{(2.667 - j4)\ \Omega}$$

To find $\mathbf{V}_{Thev}$, we will make use of the result in part (a).

$$\mathbf{V}_2 = 8 + \text{j}5.333 = (8/3)(3 + \text{j}2)$$

$$\mathbf{V}_1 = (1 - \text{j})\mathbf{V}_2 + \text{j}16 = \text{j}16 + (8/3)(5 - \text{j})$$

$$\mathbf{V}_{Thev} = \mathbf{V}_1 - \mathbf{V}_2 = 16/3 + j8 = \mathbf{9.614\angle 56.31^\circ\ V}$$

www.konkur.in

Chapter 10, Solution 61.

Find the Thevenin equivalent at terminals a-b of the circuit in Fig. 10.104.

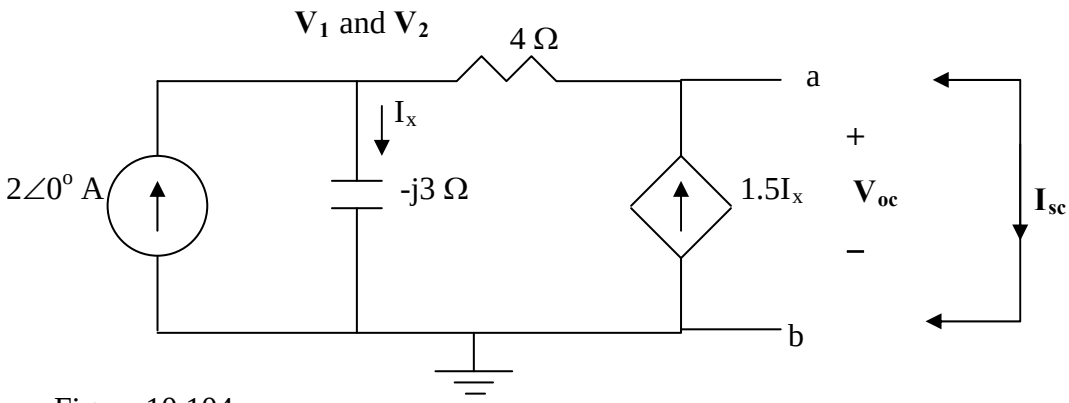

Figure 10.104
For Prob. 10.61.

Solution

Step 1. First we solve for the open circuit voltage using the above circuit and writing two node equations. Then we solve for the short circuit current which only need one node equation. For being able to solve for $\mathbf{V_{oc}}$, we need to solve these three equations,

$$-2 + [(\mathbf{V_1}-0)/(-j3)] + [(\mathbf{V_1}-\mathbf{V_{oc}})/4] = 0 \text{ and}$$

$$[(\mathbf{V_{oc}}-\mathbf{V_1})/4] - 1.5\mathbf{I_x} = 0 \text{ where } \mathbf{I_x} = [(\mathbf{V_1}-0)/(-j3)].$$

To solve for $\mathbf{I_{sc}}$, all we need to do is to solve these three equations,

$$-2 + [(\mathbf{V_2}-0)/(-j3)] + [(\mathbf{V_2}-0)/4] = 0,\ \mathbf{I_{sc}} = [\mathbf{V_2}/4] + 1.5\mathbf{I_x}, \text{ and}$$

$$\mathbf{I_x} = [\mathbf{V_2}/-j3].$$

Finally, $\mathbf{V_{Thev}} = \mathbf{V_{oc}}$ and $\mathbf{Z_{eq}} = \mathbf{V_{oc}}/\mathbf{I_{sc}}$.

Step 2. Now all we need to do is to solve for the unknowns. For $\mathbf{V_{oc}}$,

$$\mathbf{I_x} = j0.33333\mathbf{V_1} \text{ and } (0.25+(1.5)(j0.33333))\mathbf{V_1} = 0.25\mathbf{V_{oc}} \text{ or}$$

$$(0.25+j0.5)\mathbf{V_1} = (0.55902\angle 63.43°)\mathbf{V_1} = 0.25\mathbf{V_{oc}} \text{ or}$$

www.konkur.in

$\mathbf{V_1} = (0.44721\angle{-63.43°})\mathbf{V_{oc}}$ which leads to,

$(0.25+j0.33333)\mathbf{V_1} - 0.25\mathbf{V_{oc}} = 2$

$= (0.41666\angle{+53.13°})(0.44721\angle{-63.43°})V_{oc} - 0.25\mathbf{V_{oc}}$

$= (0.186335\angle{-10.3°})\mathbf{V_{oc}} - 0.25\mathbf{V_{oc}} = (0.183333-0.25-j0.033333)\mathbf{V_{oc}}$

$= (-0.066667-j0.033333)\mathbf{V_{oc}} = (0.074536\angle{-153.435°})\mathbf{V_{oc}} = 2$ or

$$\mathbf{V_{oc}} = \mathbf{V_{Thev}} = \mathbf{26.83\angle 153.44°\ V = (-24+j12)\ V}.$$

Now for $\mathbf{I_{sc}}$,

$\mathbf{I_{sc}} = [\mathbf{V_2}/4] + 1.5\mathbf{I_x} = (0.25+(1.5)(j0.33333))\mathbf{V_2} = (0.25+j0.5)\mathbf{V_2}$.

$[(\mathbf{V_2}-0)/(-j3)] + [(\mathbf{V_2}-0)/4] = 2 = (0.25+j0.3333)\mathbf{V_2}$

$= (0.41667\angle 53.13°)\mathbf{V_2} = 2$ or $\mathbf{V_2} = 4.8\angle{-53.13°}$

$\mathbf{I_{sc}} = (0.25+j0.5)\mathbf{V_2} = (0.55901\angle 63.435°)(4.8\angle{-53.13°})$

www.konkur.in

$= 2.6832\angle 10.305°$ A

Finally,

$\mathbf{Z_{eq}} = \mathbf{V_{oc}}/\mathbf{I_{sc}} = 26.833\angle 153.435°/2.6832\angle 10.305°$

$= \mathbf{10\angle 143.13°\ \Omega}$ or $= \mathbf{(-8+j6)\ \Omega}$.

Chapter 10, Solution 62.

First, we transform the circuit to the frequency domain.

$$12\cos(t) \longrightarrow 12\angle 0°, \quad \omega = 1$$

$$2\text{ H} \longrightarrow j\omega L = j2$$

$$\frac{1}{4}\text{ F} \longrightarrow \frac{1}{j\omega C} = -j4$$

$$\frac{1}{8}\text{ F} \longrightarrow \frac{1}{j\omega C} = -j8$$

To find $\mathbf{Z}_{eq}$, consider the circuit in Fig. (a).

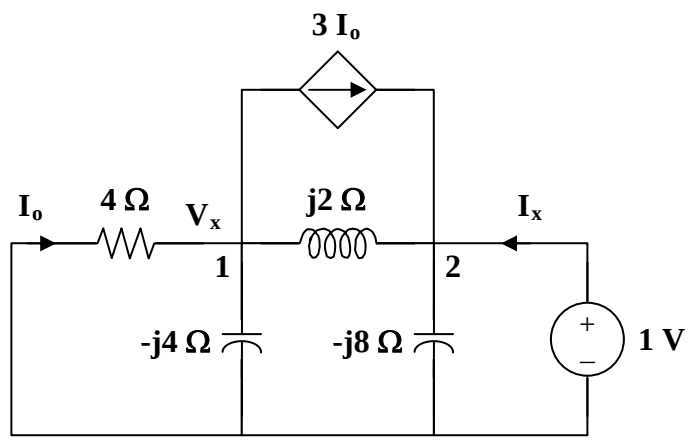

(a)

At node 1,

$$\frac{\mathbf{V}_x}{4} + \frac{\mathbf{V}_x}{-j4} + 3\mathbf{I}_o = \frac{1-\mathbf{V}_x}{j2}, \qquad \text{where } \mathbf{I}_o = \frac{-\mathbf{V}_x}{4}$$

Thus,

$$\frac{\mathbf{V}_x}{-j4} - \frac{2\mathbf{V}_x}{4} = \frac{1-\mathbf{V}_x}{j2}$$

$$\mathbf{V}_x = 0.4 + j0.8$$

At node 2,

$$\mathbf{I}_x + 3\mathbf{I}_o = \frac{1}{-j8} + \frac{1-\mathbf{V}_x}{j2}$$

$$\mathbf{I}_x = (0.75 + j0.5)\mathbf{V}_x - j\frac{3}{8}$$

$$\mathbf{I}_x = -0.1 + j0.425$$

$$\mathbf{Z}_{eq} = \frac{1}{\mathbf{I}_x} = -0.5246 - j2.229 = 2.29\angle -103.24°\ \Omega$$

www.konkur.in

To find $\mathbf{V}_{Thev}$, consider the circuit in Fig. (b).

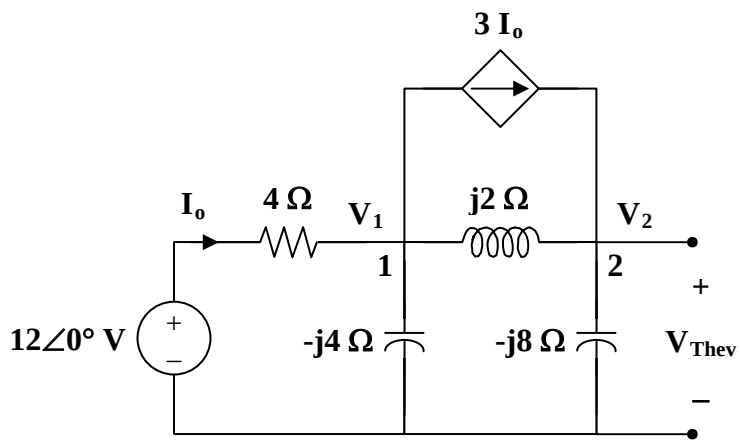

(b)

At node 1,

$$\frac{12-\mathbf{V}_1}{4} = 3\mathbf{I}_o + \frac{\mathbf{V}_1}{-j4} + \frac{\mathbf{V}_1-\mathbf{V}_2}{j2}, \quad \text{where} \quad \mathbf{I}_o = \frac{12-\mathbf{V}_1}{4}$$

$$24 = (2+j)\mathbf{V}_1 - j2\mathbf{V}_2 \qquad (1)$$

At node 2,

$$\frac{\mathbf{V}_1-\mathbf{V}_2}{j2} + 3\mathbf{I}_o = \frac{\mathbf{V}_2}{-j8}$$

$$72 = (6+j4)\mathbf{V}_1 - j3\mathbf{V}_2 \qquad (2)$$

From (1) and (2),

$$\begin{bmatrix} 24 \\ 72 \end{bmatrix} = \begin{bmatrix} 2+j & -j2 \\ 6+j4 & -j3 \end{bmatrix} \begin{bmatrix} \mathbf{V}_1 \\ \mathbf{V}_2 \end{bmatrix}$$

$$\Delta = -5+j6, \qquad \Delta_2 = -j24$$

$$\mathbf{V}_{th} = \mathbf{V}_2 = \frac{\Delta_2}{\Delta} = 3.073\angle -219.8°$$

Thus,

$$\mathbf{V}_o = \frac{2}{2+\mathbf{Z}_{th}}\mathbf{V}_{th} = \frac{(2)(3.073\angle -219.8°)}{1.4754 - j2.229}$$

$$\mathbf{V}_o = \frac{6.146\angle -219.8°}{2.673\angle -56.5°} = 2.3\angle -163.3°$$

Therefore,

$$v_o = \mathbf{2.3\cos(t-163.3°)\ V}$$

www.konkur.in

Chapter 10, Solution 63.

Transform the circuit to the frequency domain.

$$4\cos(200t + 30°) \longrightarrow 4\angle 30°, \quad \omega = 200$$
$$10\text{ H} \longrightarrow j\omega L = j(200)(10) = j2\text{ k}\Omega$$
$$5\ \mu\text{F} \longrightarrow \frac{1}{j\omega C} = \frac{1}{j(200)(5\times 10^{-6})} = -j\text{ k}\Omega$$

$\mathbf{Z}_N$ is found using the circuit in Fig. (a).

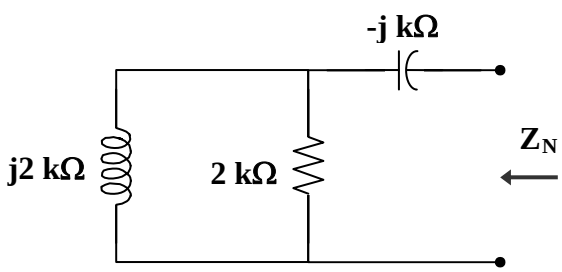

(a)

$$\mathbf{Z}_N = -j + 2 \parallel j2 = -j + 1 + j = 1\text{ k}\Omega$$

We find $\mathbf{I}_N$ using the circuit in Fig. (b).

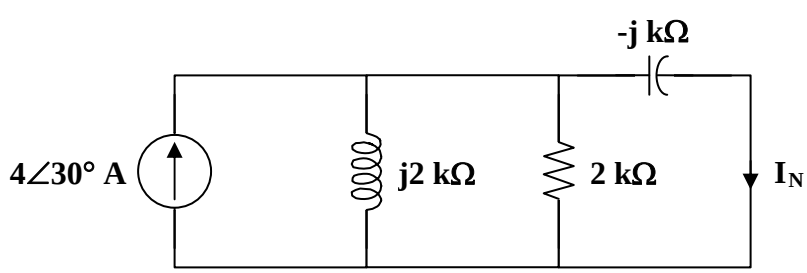

(b)

$$j2 \parallel 2 = 1 + j$$

By the current division principle,

$$\mathbf{I}_N = \frac{1+j}{1+j-j}(4\angle 30°) = 5.657\angle 75°$$

Therefore,

$$i_N(t) = \mathbf{5.657\cos(200t + 75°)\ A}$$
$$\mathbf{Z}_N = \mathbf{1\ k\Omega}$$

www.konkur.in

Chapter 10, Solution 64.

$\mathbf{Z}_N$ is obtained from the circuit in Fig. (a).

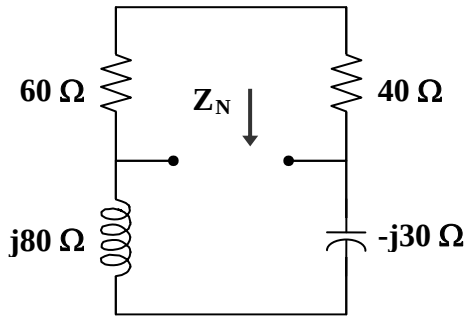

(a)

$$\mathbf{Z}_N = (60+40) \,||\, (j80 - j30) = 100 \,||\, j50 = \frac{(100)(j50)}{100 + j50}$$

$$\mathbf{Z}_N = 20 + j40 = \mathbf{44.72\angle 63.43°\ \Omega}$$

To find $\mathbf{I}_N$, consider the circuit in Fig. (b).

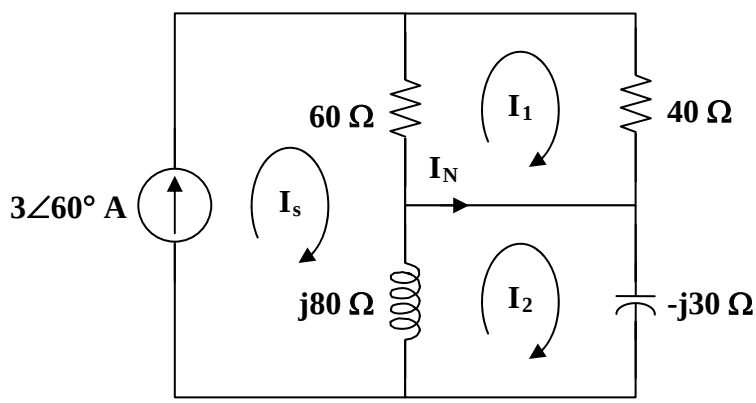

(b)

$$\mathbf{I}_s = 3\angle 60°$$

For mesh 1,

$$100\mathbf{I}_1 - 60\mathbf{I}_s = 0$$

$$\mathbf{I}_1 = 1.8\angle 60°$$

For mesh 2,

$$(j80 - j30)\mathbf{I}_2 - j80\mathbf{I}_s = 0$$

$$\mathbf{I}_2 = 4.8\angle 60°$$

$I_N = I_2 - I_1$ = **3∠60° A**

www.konkur.in

Chapter 10, Solution 65.

Using Fig. 10.108, design a problem to help other students to better understand Norton's theorem.

Although there are many ways to work this problem, this is an example based on the same kind of problem asked in the third edition.

Problem

Compute i_o in Fig. 10.108 using Norton's theorem.

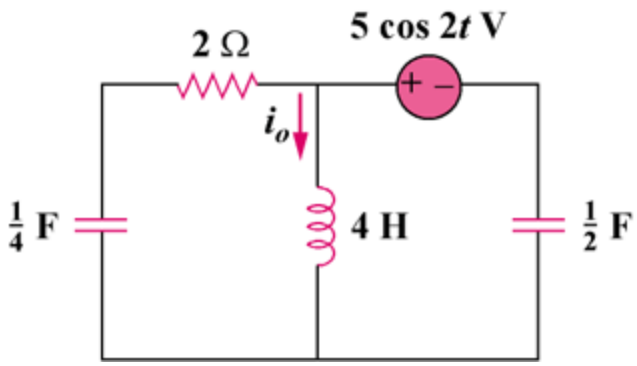

Figure 10.108

Solution

$$5\cos(2t) \longrightarrow 5\angle 0°, \quad \omega = 2$$

$$4\text{ H} \longrightarrow j\omega L = j(2)(4) = j8$$

$$\frac{1}{4}\text{ F} \longrightarrow \frac{1}{j\omega C} = \frac{1}{j(2)(1/4)} = -j2$$

$$\frac{1}{2}\text{ F} \longrightarrow \frac{1}{j\omega C} = \frac{1}{j(2)(1/2)} = -j$$

To find $\mathbf{Z}_N$, consider the circuit in Fig. (a).

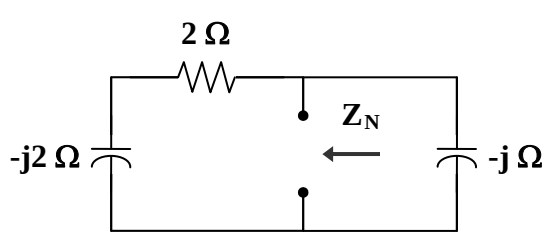

(a)

www.konkur.in

$$\mathbf{Z}_N = -j \,||\, (2 - j2) = \frac{-j(2 - j2)}{2 - j3} = \frac{1}{13}(2 - j10)$$

To find $\mathbf{I}_N$, consider the circuit in Fig. (b).

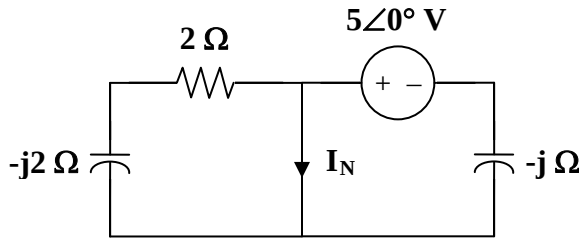

(b)

$$\mathbf{I}_N = \frac{5\angle 0°}{-j} = j5$$

The Norton equivalent of the circuit is shown in Fig. (c).

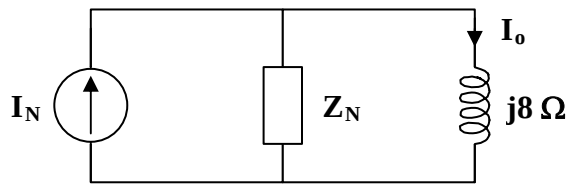

(c)

Using current division,

$$\mathbf{I}_o = \frac{\mathbf{Z}_N}{\mathbf{Z}_N + j8}\mathbf{I}_N = \frac{(1/13)(2 - j10)(j5)}{(1/13)(2 - j10) + j8} = \frac{50 + j10}{2 + j94}$$

$$\mathbf{I}_o = 0.1176 - j0.5294 = 0542\angle -77.47°$$

Therefore, $i_o =$ **542 cos(2t – 77.47°) mA**

Chapter 10, Solution 66.

$$\omega = 10$$

$$0.5\text{ H} \longrightarrow j\omega L = j(10)(0.5) = j5$$

$$10\text{ mF} \longrightarrow \frac{1}{j\omega C} = \frac{1}{j(10)(10\times10^{-3})} = -j10$$

To find $\mathbf{Z}_{th}$, consider the circuit in Fig. (a).

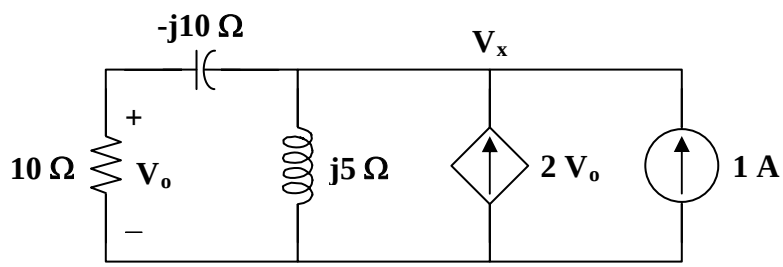

(a)

$$1 + 2\mathbf{V}_o = \frac{\mathbf{V}_x}{j5} + \frac{\mathbf{V}_x}{10 - j10}, \qquad \text{where } \mathbf{V}_o = \frac{10\mathbf{V}_x}{10 - j10}$$

$$1 + \frac{19\mathbf{V}_x}{10 - j10} = \frac{\mathbf{V}_x}{j5} \longrightarrow \mathbf{V}_x = \frac{-10 + j10}{21 + j2}$$

$$\mathbf{Z}_N = \mathbf{Z}_{th} = \frac{\mathbf{V}_x}{1} = \frac{14.142\angle135°}{21.095\angle5.44°} = \mathbf{670\angle129.56°\ m\Omega}$$

To find $\mathbf{V}_{th}$ and $\mathbf{I}_N$, consider the circuit in Fig. (b).

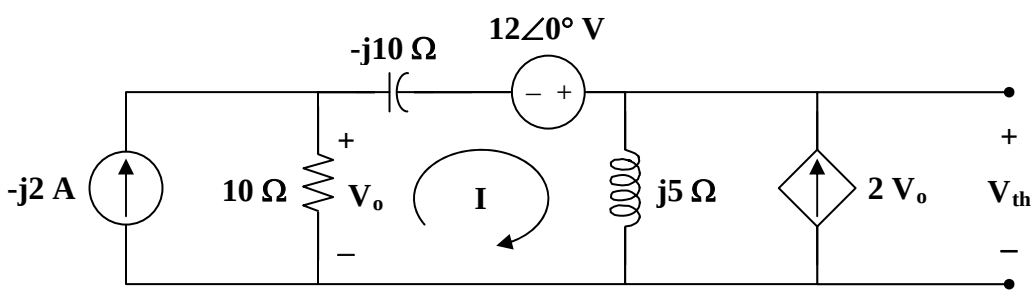

(b)

$$(10 - j10 + j5)\mathbf{I} - (10)(-j2) + j5(2\mathbf{V}_o) - 12 = 0$$

where $\mathbf{V}_o = (10)(-j2 - \mathbf{I})$

www.konkur.in

Thus,

$$(10 - j105)\mathbf{I} = -188 - j20$$

$$\mathbf{I} = \frac{188 + j20}{-10 + j105}$$

$$\mathbf{V}_{th} = j5(\mathbf{I} + 2\mathbf{V}_o) = j5(-19\mathbf{I} - j40) = -j95\mathbf{I} + 200$$

$$\mathbf{V}_{th} = \frac{-j95(188 + j20)}{-10 + j105} + 200 = \frac{(95\angle -90°)(189.06\angle 6.07°)}{105.48\angle 95.44} + 200$$

$$= 170.28\angle -179.37° + 200 = -170.27 - j1.8723 + 200 = 29.73 - j1.8723$$

$$\mathbf{V}_{th} = \mathbf{29.79\angle -3.6°\ V}$$

$$\mathbf{I}_N = \frac{\mathbf{V}_{th}}{\mathbf{Z}_{th}} = \frac{29.79\angle -3.6°}{0.67\angle 129.56°} = \mathbf{44.46\angle -133.16°\ A}$$

www.konkur.in

Chapter 10, Solution 67.

$$\boldsymbol{Z_N = Z_{Th} = 10//(13 - j5) + 12//(8 + j6) = \frac{10(13 - j5)}{23 - j5} + \frac{12(8 + j6)}{20 + j6} = \underline{11.243 + j1.079\Omega}}$$

$$V_a = \frac{10}{23 - j5}(60\angle 45^o) = 13.78 + j21.44, \qquad V_b = \frac{(8 + j6)}{20 + j6}(60\angle 45^o) = 12.069 + j26.08\Omega$$

$$\boldsymbol{V_{Th} = V_a - V_b = \underline{1.711 - j4.64 = 4.945\angle -69.76^o}\ \text{V},}$$

$$\boldsymbol{I_N = \frac{V_{Th}}{Z_{Th}} = \frac{4.945\angle -69.76°}{11.295\angle 5.48°} = \underline{437.8\angle -75.24^o}\ \text{mA}}$$

www.konkur.in

Chapter 10, Solution 68.

$$1H \longrightarrow j\omega L = j10x1 = j10$$

$$\frac{1}{20}F \longrightarrow \frac{1}{j\omega C} = \frac{1}{j10x\frac{1}{20}} = -j2$$

We obtain V_{Th} using the circuit below.

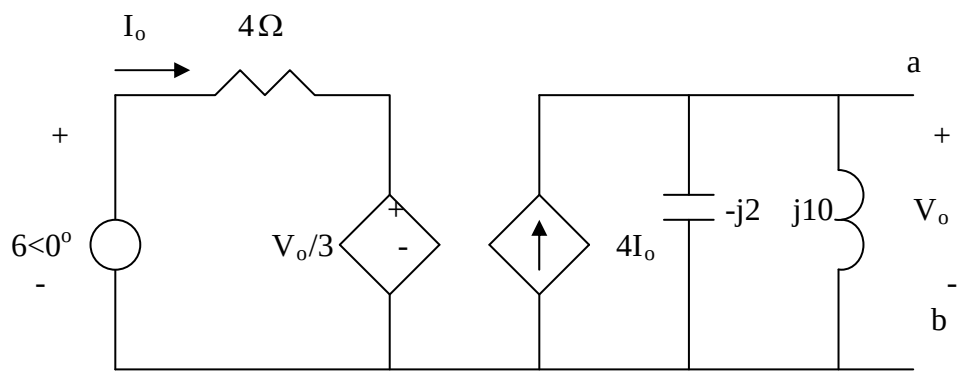

$$j10//(-j2) = \frac{j10(-j2)}{j10 - j2} = -j2.5$$

$$V_o = 4I_o x(-j2.5) = -j10I_o \qquad (1)$$

$$-6 + 4I_o + \frac{1}{3}V_o = 0 \qquad (2)$$

Combining (1) and (2) gives

$$I_o = \frac{6}{4 - j10/3}, \qquad V_{Th} = V_o = -j10I_o = \frac{-j60}{4 - j10/3} = 11.52\angle -50.19^o$$

$$\underline{\boldsymbol{v_{Th} = 11.52\sin(10t - 50.19^o)}}$$

www.konkur.in

To find $R_{Th,}$ we insert a 1-A source at terminals a-b, as shown below.

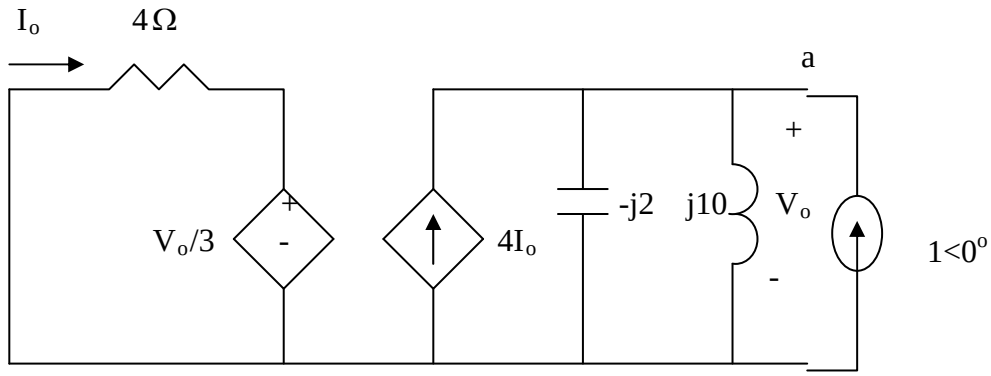

$$4I_o + \frac{1}{3}V_o = 0 \quad \longrightarrow \quad I_o = -\frac{V_o}{12}$$

$$1 + 4I_o = \frac{V_o}{-j2} + \frac{V_o}{j10}$$

Combining the two equations leads to

$$V_o = \frac{1}{0.333 + j0.4} = 1.2293 - j1.4766$$

$$\boldsymbol{Z_{Th} = \frac{V_o}{1} = \underline{1.2293 - 1.477\Omega}}$$

www.konkur.in

Chapter 10, Solution 69.

This is an inverting op amp so that

$$\frac{\mathbf{V}_o}{\mathbf{V}_s} = \frac{-\mathbf{Z}_f}{\mathbf{Z}_i} = \frac{-R}{1/j\omega C} = \mathbf{-j\omega RC}$$

When $\mathbf{V}_s = V_m$ and $\omega = 1/RC$,

$$\mathbf{V}_o = -j \cdot \frac{1}{RC} \cdot RC \cdot V_m = -jV_m = V_m \angle -90°$$

Therefore,

$$v_o(t) = V_m \sin(\omega t - 90°) = \mathbf{-V_m \cos(\omega t)}$$

www.konkur.in

Chapter 10, Solution 70.

Using Fig. 10.113, design a problem to help other students to better understand op amps in AC circuits.

Although there are many ways to work this problem, this is an example based on the same kind of problem asked in the third edition.

Problem

The circuit in Fig. 10.113 is an integrator with a feedback resistor. Calculate $v_o(t)$ if v_s = 2 cos 4 × $10^4 t$ V.

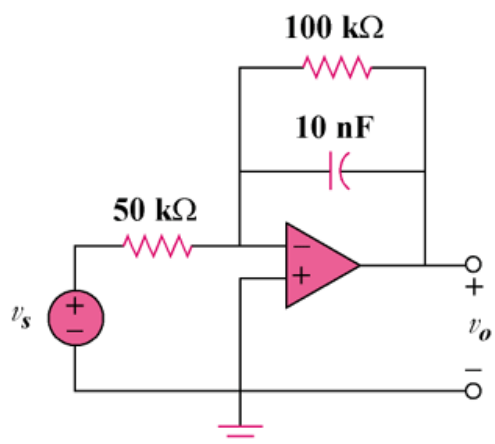

Figure 10.113

Solution

This may also be regarded as an inverting amplifier.

$$2\cos(4\times10^4 t) \longrightarrow 2\angle 0°, \quad \omega = 4\times10^4$$

$$10\text{ nF} \longrightarrow \frac{1}{j\omega C} = \frac{1}{j(4\times10^4)(10\times10^{-9})} = -j2.5\text{ k}\Omega$$

$$\frac{\mathbf{V}_o}{\mathbf{V}_s} = \frac{-\mathbf{Z}_f}{\mathbf{Z}_i}$$

where $\mathbf{Z}_i = 50\text{ k}\Omega$ and $\mathbf{Z}_f = 100\text{k} \,||\, (-j2.5\text{k}) = \dfrac{-j100}{40-j}\text{ k}\Omega$.

Thus, $$\frac{\mathbf{V}_o}{\mathbf{V}_s} = \frac{-(-j2)}{40-j}$$

If $\mathbf{V}_s = 2\angle 0°$,

www.konkur.in

$$\mathbf{V}_o = \frac{j4}{40 - j} = \frac{4\angle 90°}{40.01\angle -1.43°} = 0.1\angle 91.43°$$

Therefore,

$$v_o(t) = \mathbf{100\ cos(4x10^4\ t + 91.43°)\ mV}$$

www.konkur.in

Chapter 10, Solution 71.

$$8\cos(2t+30^o) \longrightarrow 8\angle 30^o$$

$$0.5\mu F \longrightarrow \frac{1}{j\omega C} = \frac{1}{j2x0.5x10^{-6}} = -j1M\Omega$$

At the inverting terminal,

$$\frac{V_o - 8\angle 30^o}{-j1000k} + \frac{V_o - 8\angle 30^o}{10k} = \frac{8\angle 30^o}{2k} \longrightarrow$$

$$V_o(1-j100) = 8\angle 30 + 800\angle -60° + 4000\angle -60°$$

$$V_o = \frac{6.928 + j4 + 2400 - j4157}{1-j100} = \frac{4800\angle -59.9°}{100\angle -89.43°} = 48\angle 29.53^o$$

$v_o(t)$ = **48cos(2t+29.53^o) V**

www.konkur.in

Chapter 10, Solution 72.

$$4\cos(10^4 t) \longrightarrow 4\angle 0°, \quad \omega = 10^4$$

$$1\text{ nF} \longrightarrow \frac{1}{j\omega C} = \frac{1}{j(10^4)(10^{-9})} = -j100\text{ k}\Omega$$

Consider the circuit as shown below.

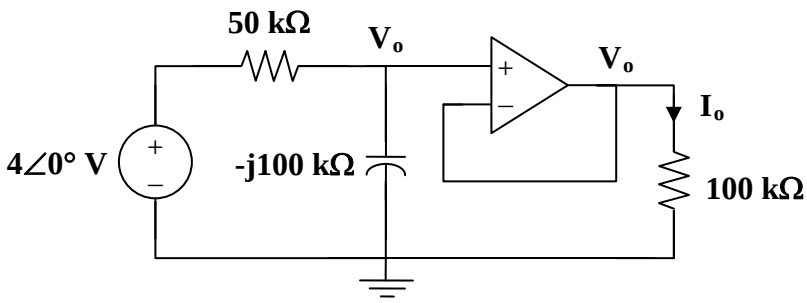

At the noninverting node,

$$\frac{4 - \mathbf{V}_o}{50} = \frac{\mathbf{V}_o}{-j100} \longrightarrow \mathbf{V}_o = \frac{4}{1 + j0.5}$$

$$\mathbf{I}_o = \frac{\mathbf{V}_o}{100k} = \frac{4}{(100)(1 + j0.5)}\text{mA} = 35.78\angle -26.56°\ \mu\text{A}$$

Therefore,

$$i_o(t) = \mathbf{35.78\cos(10^4 t – 26.56°)\ \mu A}$$

www.konkur.in

Chapter 10, Solution 73.

As a voltage follower, $\mathbf{V}_2 = \mathbf{V}_o$

$$C_1 = 10\text{ nF} \longrightarrow \frac{1}{j\omega C_1} = \frac{1}{j(5\times10^3)(10\times10^{-9})} = \text{-j20 k}\Omega$$

$$C_2 = 20\text{ nF} \longrightarrow \frac{1}{j\omega C_2} = \frac{1}{j(5\times10^3)(20\times10^{-9})} = \text{-j10 k}\Omega$$

Consider the circuit in the frequency domain as shown below.

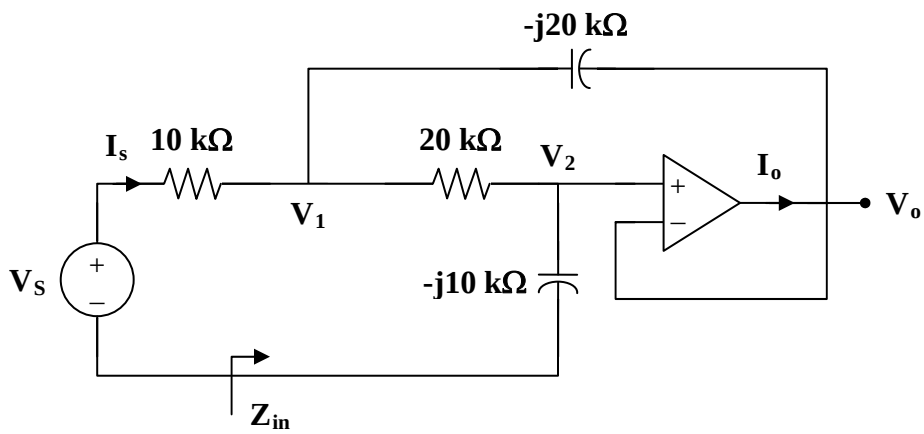

At node 1,

$$\frac{\mathbf{V}_s - \mathbf{V}_1}{10} = \frac{\mathbf{V}_1 - \mathbf{V}_o}{\text{- j20}} + \frac{\mathbf{V}_1 - \mathbf{V}_o}{20}$$

$$2\mathbf{V}_s = (3+j)\mathbf{V}_1 - (1+j)\mathbf{V}_o \qquad (1)$$

At node 2,

$$\frac{\mathbf{V}_1 - \mathbf{V}_o}{20} = \frac{\mathbf{V}_o - 0}{\text{- j10}}$$

$$\mathbf{V}_1 = (1+j2)\mathbf{V}_o \qquad (2)$$

Substituting (2) into (1) gives

$$2\mathbf{V}_s = j6\mathbf{V}_o \quad \text{or} \quad \mathbf{V}_o = -j\frac{1}{3}\mathbf{V}_s$$

$$\mathbf{V}_1 = (1+j2)\mathbf{V}_o = \left(\frac{2}{3} - j\frac{1}{3}\right)\mathbf{V}_s$$

www.konkur.in

$$\mathbf{I}_s = \frac{\mathbf{V}_s - \mathbf{V}_1}{10k} = \frac{(1/3)(1+j)}{10k}\mathbf{V}_s$$

$$\frac{\mathbf{I}_s}{\mathbf{V}_s} = \frac{1+j}{30k}$$

$$\mathbf{Z}_{in} = \frac{\mathbf{V}_s}{\mathbf{I}_s} = \frac{30k}{1+j} = 15(1-j)\,k$$

$$\mathbf{Z}_{in} = \mathbf{21.21\angle{-45}°\ k\Omega}$$

www.konkur.in

Chapter 10, Solution 74.

$$\mathbf{Z}_i = R_1 + \frac{1}{j\omega C_1}, \qquad \mathbf{Z}_f = R_2 + \frac{1}{j\omega C_2}$$

$$\mathbf{A}_v = \frac{\mathbf{V}_o}{\mathbf{V}_s} = \frac{-\mathbf{Z}_f}{\mathbf{Z}_i} = -\frac{R_2 + \frac{1}{j\omega C_2}}{R_1 + \frac{1}{j\omega C_1}} = -\left(\frac{C_1}{C_2}\right)\left(\frac{1 + j\omega R_2 C_2}{1 + j\omega R_1 C_1}\right)$$

At $\omega = 0$, $\qquad \mathbf{A}_v = -\dfrac{\mathbf{C_1}}{\mathbf{C_2}}$

As $\omega \to \infty$, $\qquad \mathbf{A}_v = -\dfrac{\mathbf{R_2}}{\mathbf{R_1}}$

At $\omega = \dfrac{1}{R_1 C_1}$, $\qquad \mathbf{A}_v = -\left(\dfrac{\mathbf{C_1}}{\mathbf{C_2}}\right)\left(\dfrac{\mathbf{1 + jR_2C_2/R_1C_1}}{\mathbf{1 + j}}\right)$

At $\omega = \dfrac{1}{R_2 C_2}$, $\qquad \mathbf{A}_v = -\left(\dfrac{\mathbf{C_1}}{\mathbf{C_2}}\right)\left(\dfrac{\mathbf{1 + j}}{\mathbf{1 + jR_1C_1/R_2C_2}}\right)$

www.konkur.in

Chapter 10, Solution 75.

$$\omega = 2\times10^3$$

$$C_1 = C_2 = 1\text{ nF} \longrightarrow \frac{1}{j\omega C_1} = \frac{1}{j(2\times10^3)(1\times10^{-9})} = \text{-j500 k}\Omega$$

Consider the circuit shown below.

Let $\mathbf{V}_s$ = 10V.

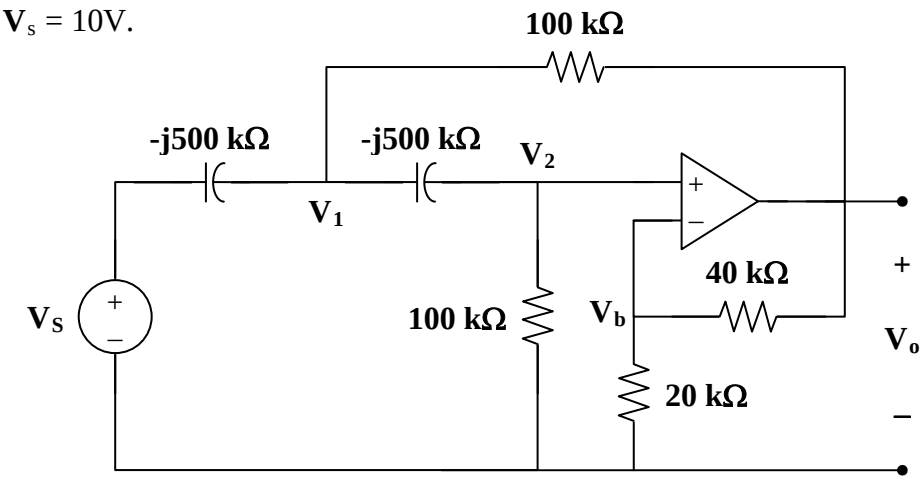

At node 1,

$$[(\mathbf{V}_1-10)/(-j500k)] + [(\mathbf{V}_1-\mathbf{V}_o)/10^5] + [(\mathbf{V}_1-\mathbf{V}_2)/(-j500k)] = 0$$

$$\text{or } (1+j0.4)\mathbf{V}_1 - j0.2\mathbf{V}_2 - \mathbf{V}_o = j2 \qquad (1)$$

At node 2,

$$[(\mathbf{V}_2-\mathbf{V}_1)/(-j500k)] + [(\mathbf{V}_2-0)/100k] + 0 = 0 \text{ or}$$

$$-j0.2\mathbf{V}_1 + (1+j0.2)\mathbf{V}_2 = 0 \text{ or } \mathbf{V}_1 = [-(1+j0.2)/(-j0.2)]V_2$$

$$= (1-j5)\mathbf{V}_2 \qquad (2)$$

At node b,

$$\mathbf{V_b} = \frac{R_3}{R_3+R_4}\mathbf{V}_o = \frac{\mathbf{V}_o}{3} = \mathbf{V_2} \qquad (3)$$

From (2) and (3),

$$\mathbf{V}_1 = (0.3333-j1.6667)\mathbf{V}_o \qquad (4)$$

Substituting (3) and (4) into (1),

$$(1+j0.4)(0.3333-j1.6667)\mathbf{V}_o - j0.06667\mathbf{V}_o - \mathbf{V}_o = j2$$

$$(1+j0.4)(0.3333-j1.6667) = (1.077\angle21.8^\circ)(1.6997\angle-78.69^\circ)$$

$$= 1.8306\angle-56.89^\circ = 1-j1.5334$$

www.konkur.in

$$(1-1+j(-1.5334-0.06667))\mathbf{V_o} = (-j1.6001)\mathbf{V_o} = 1.6001\angle -90^\circ$$

Therefore,

$$\mathbf{V}_o = 2\angle 90^\circ/(1.6001\angle -90^\circ) = 1.2499\angle 180^\circ$$

Since $\mathbf{V}_s = 10$,

$$\mathbf{V}_o/\mathbf{V}_s = \mathbf{0.12499\angle 180^\circ}.$$

www.konkur.in

Chapter 10, Solution 76.

Let the voltage between the -jkΩ capacitor and the 10kΩ resistor be $\mathbf{V}_1$.

$$\frac{2\angle 30^o - V_1}{-j4k} = \frac{V_1 - V_o}{10k} + \frac{V_1 - V_o}{20k} \longrightarrow \qquad (1)$$

$$2\angle 30^o = (1 - j0.6)V_1 + j0.6V_o$$

= 1.7321+j1

Also,

$$\frac{V_1 - V_o}{10k} = \frac{V_o}{-j2k} \longrightarrow \quad V_1 = (1 + j5)V_o \qquad (2)$$

Solving (2) into (1) yields

$$2\angle 30° = (1 - j0.6)(1 + j5)V_o + j0.6V_o = (1 + 3 - j0.6 + j5 + j6)V_o$$

$$= (4+j5)V_o$$

$$V_o = \frac{2\angle 30°}{6.403\angle 51.34°} = \underline{0.3124\angle -21.34^o \ \ V}$$

= **312.4∠–21.34˚ mV**

$\mathbf{I}_o = (\mathbf{V}_1 - \mathbf{V}_o)/20k = \mathbf{V}_o/(-j4k) = (0.3124/4k)\angle(-21.43+90)^\circ$

= **78.1∠68.57˚ µA**

We can easily check this answer using MATLAM. Using equations (1) and (2) we can identify the following matrix equations:

YV = **I** where

```
>> Y=[1-0.6i,0.6i;1,-1-0.5i]

Y =
   1.0000 - 0.6000i        0 + 0.6000i
   1.0000            -1.0000 - 5.0000i

>> I=[1.7321+1i;0]

I =
   1.7321 + 1.0000i
        0
```

www.konkur.in

```
>> V=inv(Y)*I

V =
   0.8593 + 1.3410i
   0.2909 - 0.1137i
```

$= V_o =$ **312.3∠–21.35˚ mV**. The answer checks.

www.konkur.in

Chapter 10, Solution 77.

Consider the circuit below.

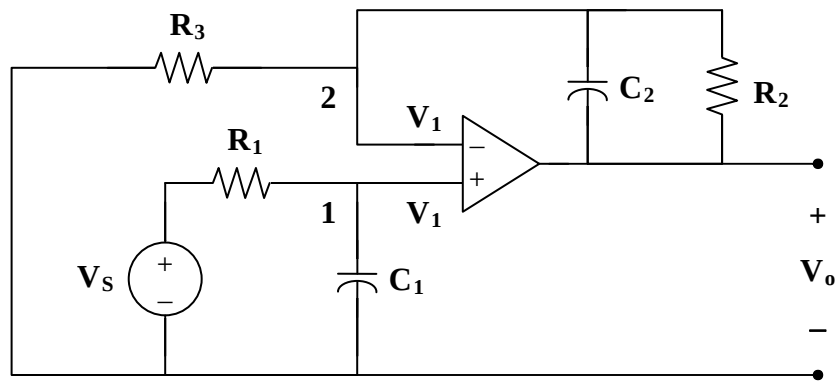

At node 1,

$$\frac{\mathbf{V}_s - \mathbf{V}_1}{R_1} = j\omega C\mathbf{V}_1$$

$$\mathbf{V}_s = (1 + j\omega R_1 C_1)\mathbf{V}_1 \qquad (1)$$

At node 2,

$$\frac{0 - \mathbf{V}_1}{R_3} = \frac{\mathbf{V}_1 - \mathbf{V}_o}{R_2} + j\omega C_2(\mathbf{V}_1 - \mathbf{V}_o)$$

$$\mathbf{V}_1 = (\mathbf{V}_o - \mathbf{V}_1)\left(\frac{R_3}{R_2} + j\omega C_2 R_3\right)$$

$$\mathbf{V}_o = \left(1 + \frac{1}{(R_3/R_2) + j\omega C_2 R_3}\right)\mathbf{V}_1 \qquad (2)$$

From (1) and (2),

$$\mathbf{V}_o = \frac{\mathbf{V}_s}{1 + j\omega R_1 C_1}\left(1 + \frac{R_2}{R_3 + j\omega C_2 R_2 R_3}\right)$$

$$\frac{\mathbf{V}_o}{\mathbf{V}_s} = \frac{\mathbf{R_2 + R_3 + j\omega C_2 R_2 R_3}}{\mathbf{(1 + j\omega R_1 C_1)(R_3 + j\omega C_2 R_2 R_3)}}$$

www.konkur.in

Chapter 10, Solution 78.

$$2\sin(400t) \longrightarrow 2\angle 0°, \quad \omega = 400$$

$$0.5\ \mu F \longrightarrow \frac{1}{j\omega C} = \frac{1}{j(400)(0.5\times 10^{-6})} = -j5\ k\Omega$$

$$0.25\ \mu F \longrightarrow \frac{1}{j\omega C} = \frac{1}{j(400)(0.25\times 10^{-6})} = -j10\ k\Omega$$

Consider the circuit as shown below.

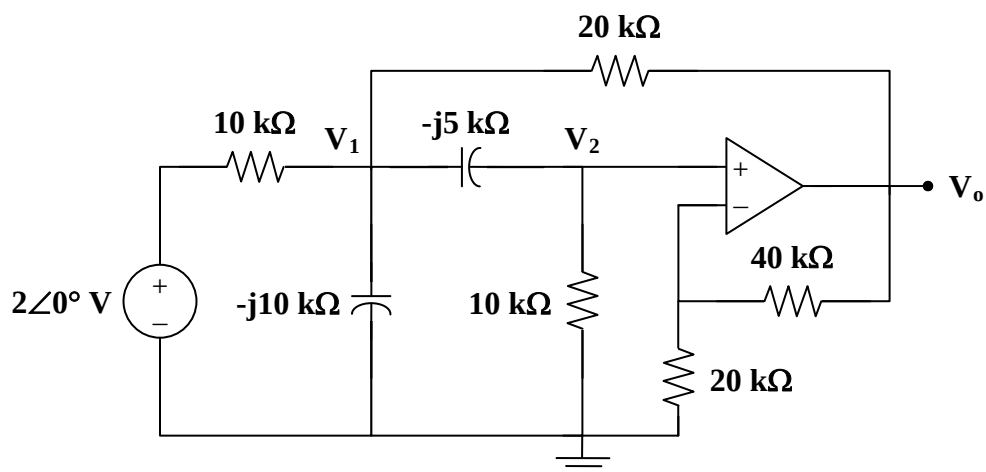

At node 1,

$$\frac{2-\mathbf{V}_1}{10} = \frac{\mathbf{V}_1}{-j10} + \frac{\mathbf{V}_1-\mathbf{V}_2}{-j5} + \frac{\mathbf{V}_1-\mathbf{V}_o}{20}$$

$$4 = (3+j6)\mathbf{V}_1 - j4\mathbf{V}_2 - \mathbf{V}_o \qquad (1)$$

At node 2,

$$\frac{\mathbf{V}_1-\mathbf{V}_2}{-j5} = \frac{\mathbf{V}_2}{10}$$

$$\mathbf{V}_1 = (1-j0.5)\mathbf{V}_2 \qquad (2)$$

But

$$\mathbf{V}_2 = \frac{20}{20+40}\mathbf{V}_o = \frac{1}{3}\mathbf{V}_o \qquad (3)$$

From (2) and (3),

$$\mathbf{V}_1 = \frac{1}{3}\cdot(1-j0.5)\mathbf{V}_o \qquad (4)$$

Substituting (3) and (4) into (1) gives

$$4 = (3+j6)\cdot\frac{1}{3}\cdot(1-j0.5)\mathbf{V}_o - j\frac{4}{3}\mathbf{V}_o - \mathbf{V}_o = \left(1+j\frac{1}{6}\right)\mathbf{V}_o$$

$$\mathbf{V}_o = \frac{24}{6+j} = 3.945\angle -9.46°$$

Therefore,

$$v_o(t) = \mathbf{3.945\sin(400t–9.46°)\ V}$$

www.konkur.in

Chapter 10, Solution 79.

$$0.5\cos(1000t) \longrightarrow 0.5\angle 0°, \quad \omega = 1000$$

$$0.1\ \mu F \longrightarrow \frac{1}{j\omega C} = \frac{1}{j(1000)(0.1\times 10^{-6})} = -j10\ k\Omega$$

$$0.2\ \mu F \longrightarrow \frac{1}{j\omega C} = \frac{1}{j(1000)(0.2\times 10^{-6})} = -j5\ k\Omega$$

Consider the circuit shown below.

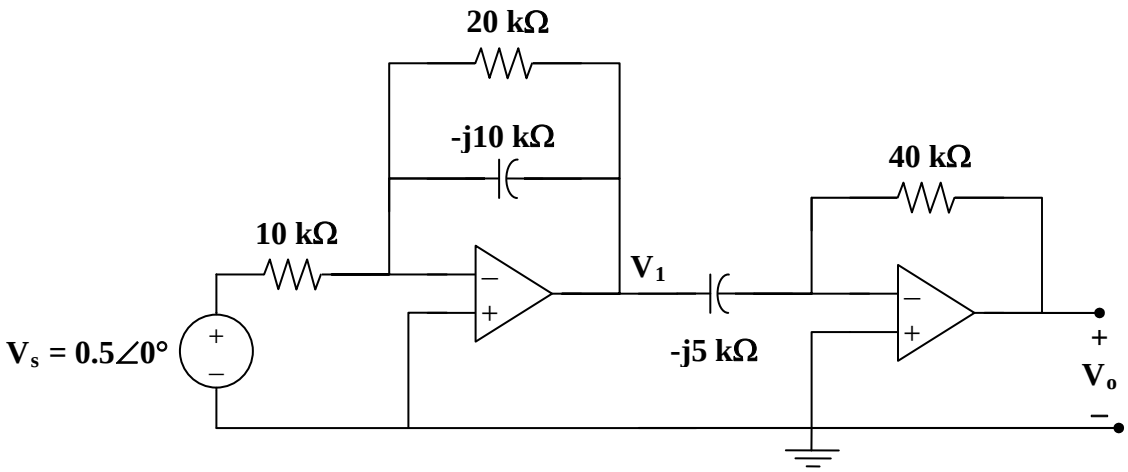

Since each stage is an inverter, we apply $\mathbf{V}_o = \frac{-\mathbf{Z}_f}{\mathbf{Z}_i}\mathbf{V}_i$ to each stage.

$$\mathbf{V}_o = \frac{-40}{-j5}\mathbf{V}_1 \qquad (1)$$

and

$$\mathbf{V}_1 = \frac{-20\,||\,(-j10)}{10}\mathbf{V}_s \qquad (2)$$

From (1) and (2),

$$\mathbf{V}_o = \left(\frac{-j8}{10}\right)\left(\frac{-(20)(-j10)}{20-j10}\right)0.5\angle 0°$$

$$\mathbf{V}_o = 1.6(2+j) = 35.78\angle 26.56°$$

Therefore, $v_o(t) =$ **3.578cos(1000t + 26.56°) V**

www.konkur.in

Chapter 10, Solution 80.

$$4\cos(1000t - 60°) \longrightarrow 4\angle -60°, \quad \omega = 1000$$

$$0.1\ \mu F \longrightarrow \frac{1}{j\omega C} = \frac{1}{j(1000)(0.1\times 10^{-6})} = -j10\ k\Omega$$

$$0.2\ \mu F \longrightarrow \frac{1}{j\omega C} = \frac{1}{j(1000)(0.2\times 10^{-6})} = -j5\ k\Omega$$

The two stages are inverters so that

$$\mathbf{V}_o = \left(\frac{20}{-j10}\cdot(4\angle -60°) + \frac{20}{50}\mathbf{V}_o\right)\left(\frac{-j5}{10}\right)$$

$$= \frac{-j}{2}\cdot(j2)\cdot(4\angle -60°) + \frac{-j}{2}\cdot\frac{2}{5}\mathbf{V}_o$$

$$(1 + j/5)\,\mathbf{V}_o = 4\angle -60°$$

$$\mathbf{V}_o = \frac{4\angle -60°}{1 + j/5} = 3.922\angle -71.31°$$

Therefore, $v_o(t) =$ **3.922 cos(1000t – 71.31°) V**

www.konkur.in

Chapter 10, Solution 81.

We need to get the capacitance and inductance corresponding to –j2 Ω and j4 Ω.

$$-j2 \quad \longrightarrow \quad C = \frac{1}{\omega X_c} = \frac{1}{1x2} = 0.5F$$

$$j4 \quad \longrightarrow \quad L = \frac{X_L}{\omega} = 4H$$

The schematic is shown below.

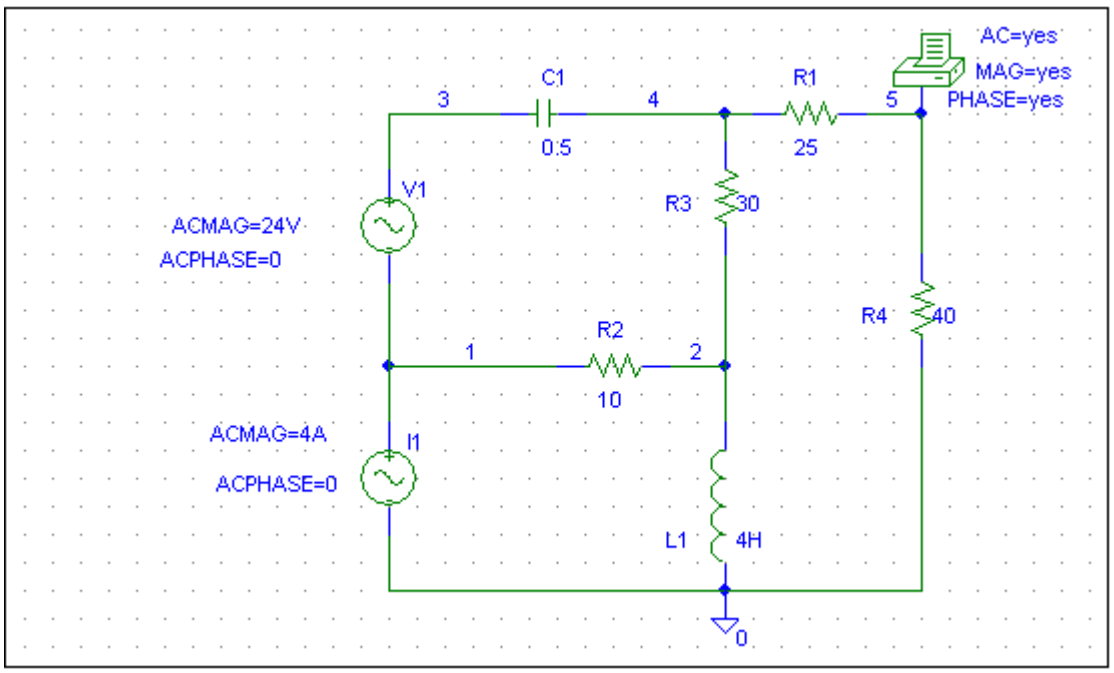

When the circuit is simulated, we obtain the following from the output file.

FREQ	VM(5)	VP(5)
1.592E-01	1.127E+01	-1.281E+02

From this, we obtain

$$V_o = \mathbf{11.27\angle 128.1^o\ V}.$$

www.konkur.in

Chapter 10, Solution 82.

The schematic is shown below. We insert PRINT to print V_o in the output file. For AC Sweep, we set Total Pts = 1, Start Freq = 0.1592, and End Freq = 0.1592. After simulation, we print out the output file which includes:

FREQ	VM($N_0001)	VP($N_0001)
1.592 E-01	7.684 E+00	5.019 E+01

which means that V_o = **7.684∠50.19° V**

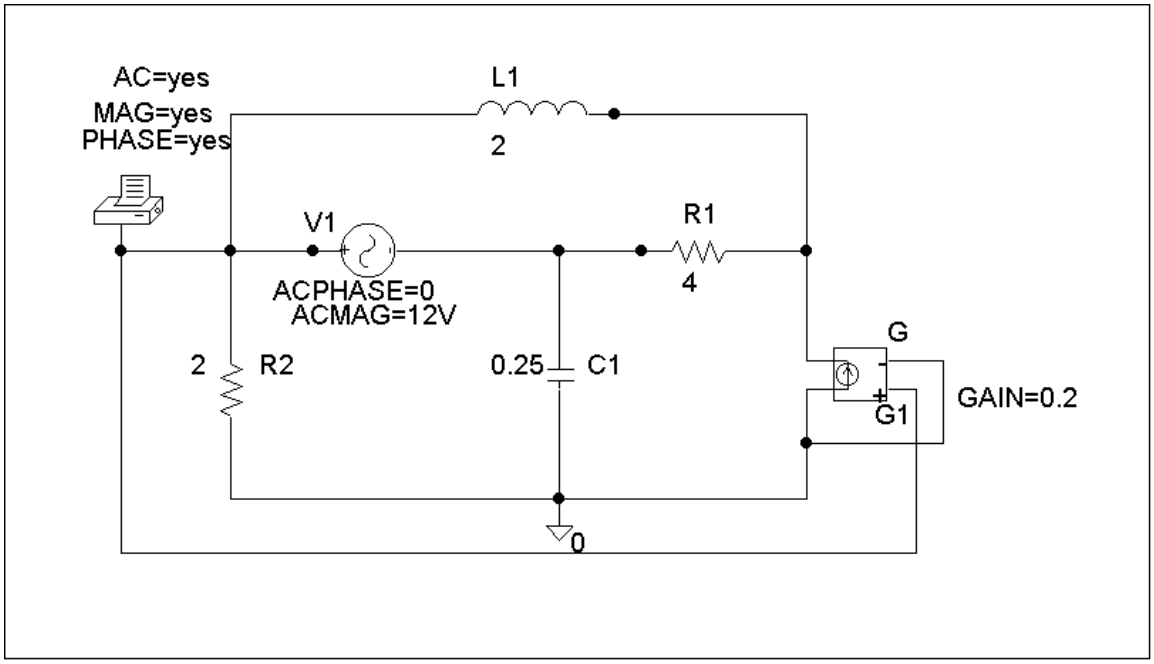

Chapter 10, Solution 83.

The schematic is shown below. The frequency is $f = \omega / 2\pi = \dfrac{1000}{2\pi} = 159.15$

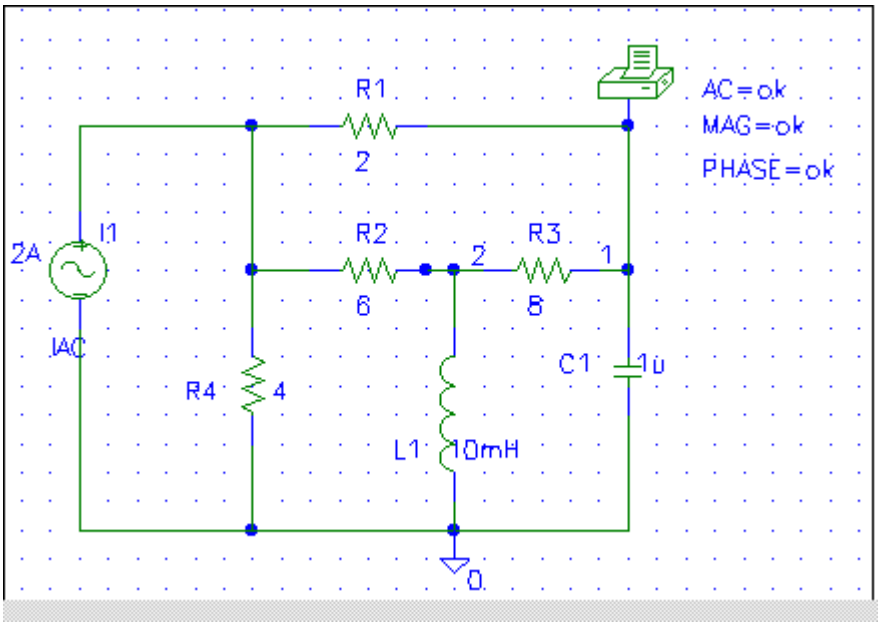

When the circuit is saved and simulated, we obtain from the output file

FREQ	VM(1)	VP(1)
1.592E+02	6.611E+00	-1.592E+02

Thus,

$$v_o = \mathbf{6.611\cos(1000t - 159.2^o)\ V}$$

www.konkur.in

Chapter 10, Solution 84.

The schematic is shown below. We set PRINT to print V_o in the output file. In AC Sweep box, we set Total Pts = 1, Start Freq = 0.1592, and End Freq = 0.1592. After simulation, we obtain the output file which includes:

FREQ	VM($N_0003)	VP($N_0003)
1.592 E-01	1.664 E+00	–1.646 E+02

Namely, V_o = **1.664∠–146.4° V**

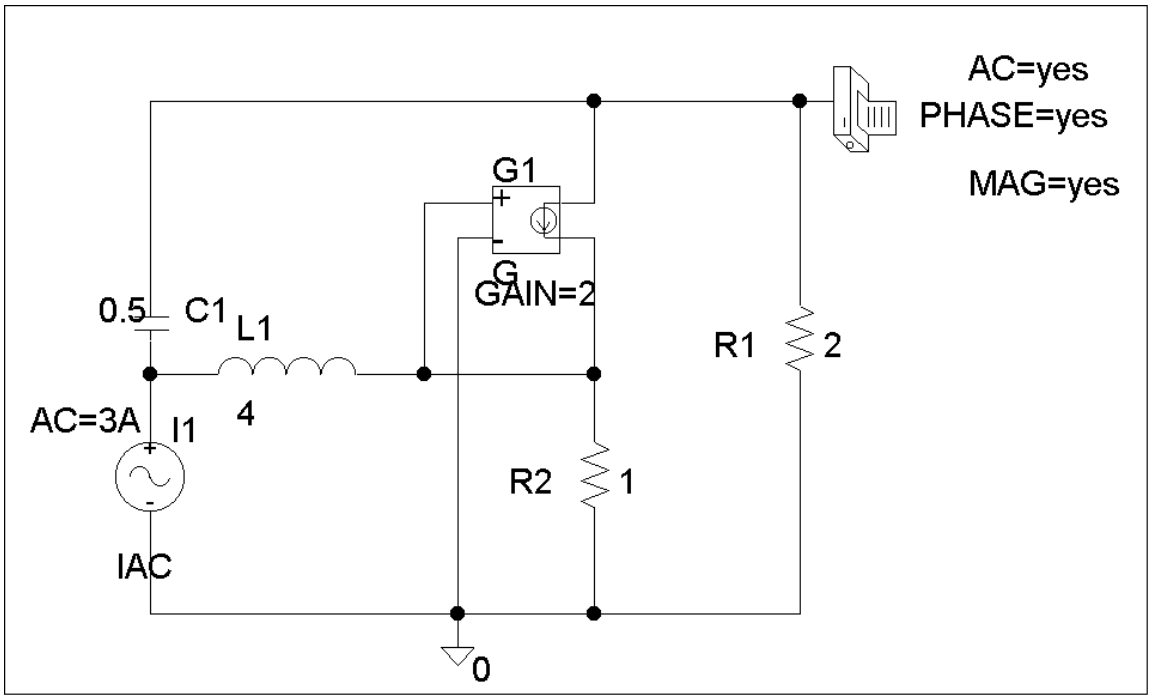

Chapter 10, Solution 85.

Using Fig. 10.127, design a problem to help other students to better understand performing AC analysis with *PSpice*.

Although there are many ways to solve this problem, this is an example based on the same kind of problem asked in the third edition.

Problem

Use *PSpice* to find V_o in the circuit of Fig. 10.127. Let $R_1 = 2\ \Omega$, $R_2 = 1\ \Omega$, $R_3 = 1\ \Omega$, $R_4 = 2\ \Omega$, $I_s = 2\angle 0^\circ$ A, $X_L = 1\ \Omega$, and $X_C = 1\ \Omega$.

Solution

The schematic is shown below. We let $\omega = 1$ rad/s so that L=1H and C=1F.

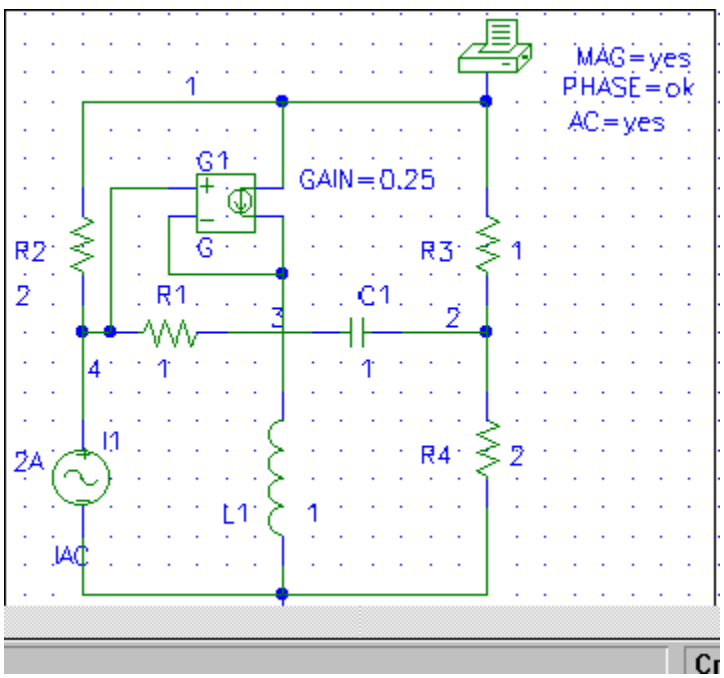

When the circuit is saved and simulated, we obtain from the output file

FREQ	VM(1)	VP(1)
1.591E-01	2.228E+00	-1.675E+02

From this, we conclude that

$$V_o = \mathbf{2.228\angle{-167.5^\circ}\ V}.$$

www.konkur.in

Chapter 10, Solution 86.

The schematic is shown below. We insert three pseudocomponent PRINTs at nodes 1, 2, and 3 to print V_1, V_2, and V_3, into the output file. Assume that w = 1, we set Total Pts = 1, Start Freq = 0.1592, and End Freq = 0.1592. After saving and simulating the circuit, we obtain the output file which includes:

FREQ	VM($N_0002)	VP($N_0002)
1.592 E-01	6.000 E+01	3.000 E+01

FREQ	VM($N_0003)	VP($N_0003)
1.592 E-01	2.367 E+02	-8.483 E+01

FREQ	VM($N_0001)	VP($N_0001)
1.592 E-01	1.082 E+02	1.254 E+02

Therefore,

$$V_1 = \mathbf{60\angle 30^o\ V} \quad V_2 = \mathbf{236.7\angle -84.83^o\ V} \quad V_3 = \mathbf{108.2\angle 125.4^o\ V}$$

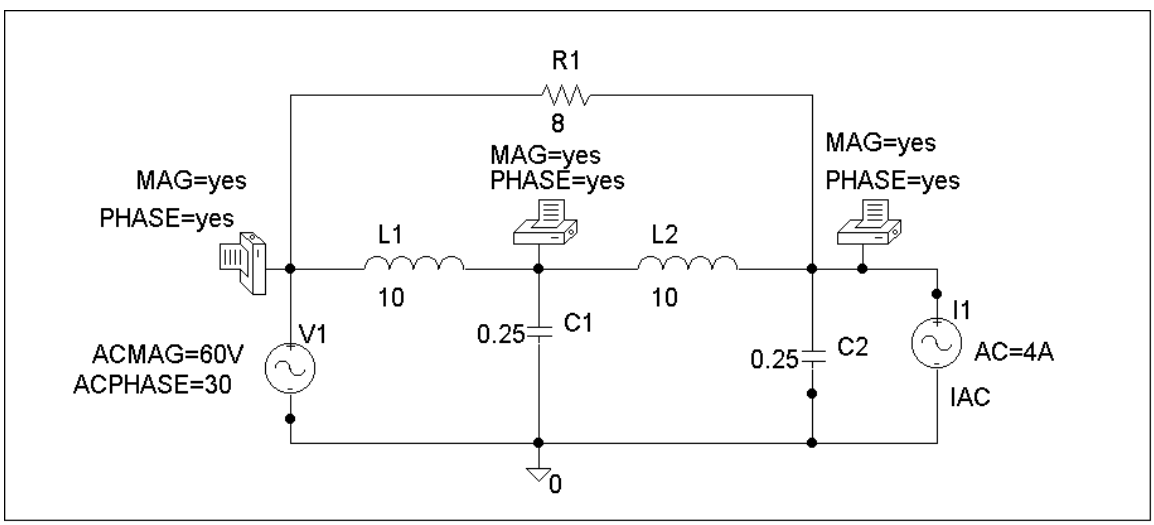

www.konkur.in

Chapter 10, Solution 87.

The schematic is shown below. We insert three PRINTs at nodes 1, 2, and 3. We set Total Pts = 1, Start Freq = 0.1592, End Freq = 0.1592 in the AC Sweep box. After simulation, the output file includes:

FREQ	VM($N_0004)	VP($N_0004)
1.592 E-01	1.591 E+01	1.696 E+02

FREQ	VM($N_0001)	VP($N_0001)
1.592 E-01	5.172 E+00	-1.386 E+02

FREQ	VM($N_0003)	VP($N_0003)
1.592 E-01	2.270 E+00	-1.524 E+02

Therefore,

V_1 = **15.91∠169.6° V** V_2 = **5.172∠-138.6° V** V_3 = **2.27∠-152.4° V**

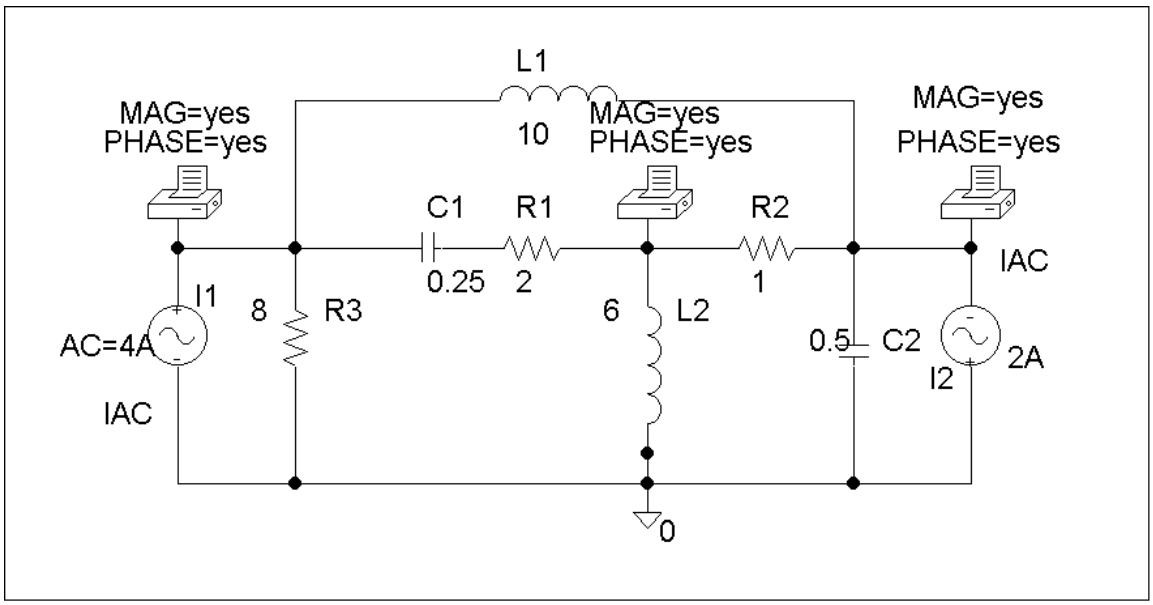

www.konkur.in

Chapter 10, Solution 88.

The schematic is shown below. We insert IPRINT and PRINT to print I_o and V_o in the output file. Since w = 4, f = w/2π = 0.6366, we set Total Pts = 1, Start Freq = 0.6366, and End Freq = 0.6366 in the AC Sweep box. After simulation, the output file includes:

FREQ	VM($N_0002)	VP($N_0002)
6.366 E-01	3.496 E+01	1.261 E+01

FREQ	IM(V_PRINT2)	IP(V_PRINT2)
6.366 E-01	8.912 E-01	-8.870 E+01

Therefore, $V_o = 34.96\angle 12.6^o$ V, $I_o = 0.8912\angle -88.7^o$ A

v_o = **34.96 cos(4t + 12.6°)V**, i_o = **0.8912cos(4t – 88.7°)A**

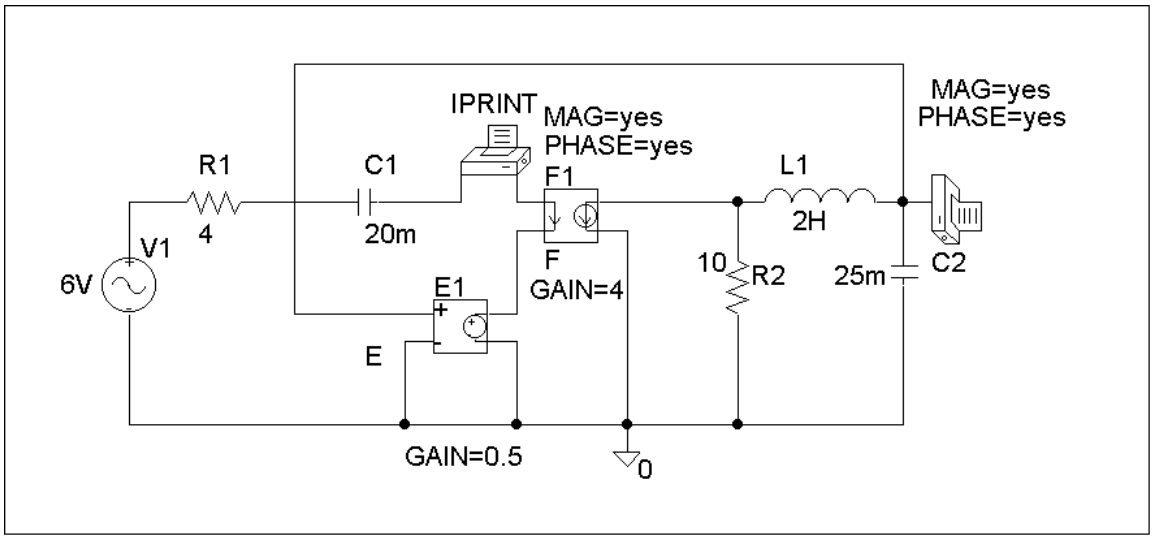

www.konkur.in

Chapter 10, Solution 89.

Consider the circuit below.

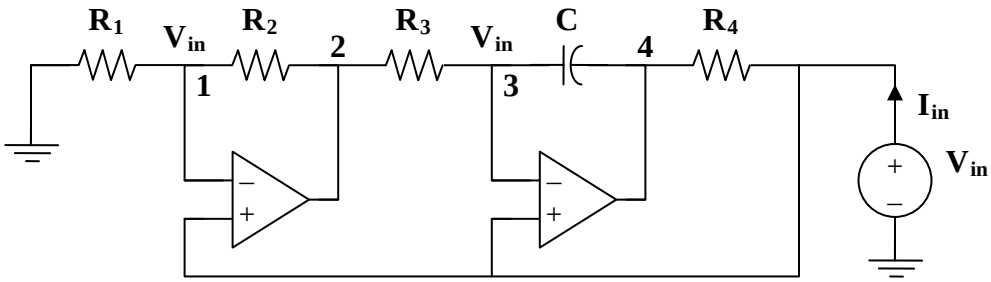

At node 1,

$$\frac{0-\mathbf{V}_{in}}{R_1}=\frac{\mathbf{V}_{in}-\mathbf{V}_2}{R_2}$$

$$-\mathbf{V}_{in}+\mathbf{V}_2=\frac{R_2}{R_1}\mathbf{V}_{in} \qquad (1)$$

At node 3,

$$\frac{\mathbf{V}_2-\mathbf{V}_{in}}{R_3}=\frac{\mathbf{V}_{in}-\mathbf{V}_4}{1/j\omega C}$$

$$-\mathbf{V}_{in}+\mathbf{V}_4=\frac{\mathbf{V}_{in}-\mathbf{V}_2}{j\omega CR_3} \qquad (2)$$

From (1) and (2),

$$-\mathbf{V}_{in}+\mathbf{V}_4=\frac{-R_2}{j\omega CR_3R_1}\mathbf{V}_{in}$$

Thus,

$$\mathbf{I}_{in}=\frac{\mathbf{V}_{in}-\mathbf{V}_4}{R_4}=\frac{R_2}{j\omega CR_3R_1R_4}\mathbf{V}_{in}$$

$$\mathbf{Z}_{in}=\frac{\mathbf{V}_{in}}{\mathbf{I}_{in}}=\frac{j\omega CR_1R_3R_4}{R_2}=j\omega L_{eq}$$

where $\mathbf{L_{eq}=\frac{R_1R_3R_4C}{R_2}}$

www.konkur.in

Chapter 10, Solution 90.

Let $$\mathbf{Z}_4 = R \parallel \frac{1}{j\omega C} = \frac{R}{1 + j\omega RC}$$

$$\mathbf{Z}_3 = R + \frac{1}{j\omega C} = \frac{1 + j\omega RC}{j\omega C}$$

Consider the circuit shown below.

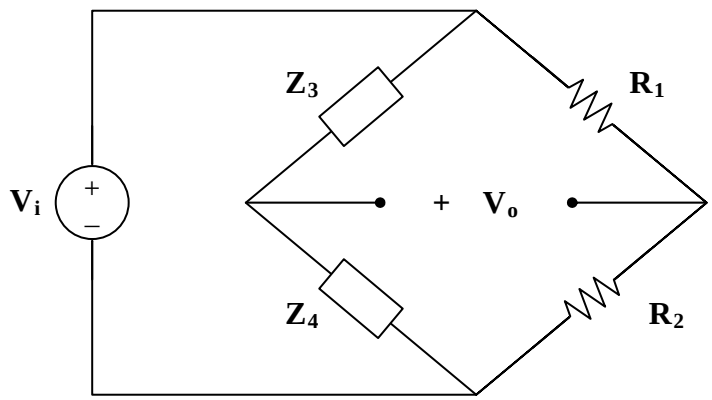

$$\mathbf{V}_o = \frac{\mathbf{Z}_4}{\mathbf{Z}_3 + \mathbf{Z}_4}\mathbf{V}_i - \frac{R_2}{R_1 + R_2}\mathbf{V}_i$$

$$\frac{\mathbf{V}_o}{\mathbf{V}_i} = \frac{\dfrac{R}{1 + j\omega C}}{\dfrac{R}{1 + j\omega C} + \dfrac{1 + j\omega RC}{j\omega C}} - \frac{R_2}{R_1 + R_2}$$

$$= \frac{j\omega RC}{j\omega RC + (1 + j\omega RC)^2} - \frac{R_2}{R_1 + R_2}$$

$$\frac{\mathbf{V}_o}{\mathbf{V}_i} = \frac{j\omega RC}{1 - \omega^2 R^2 C^2 + j3\omega RC} - \frac{R_2}{R_1 + R_2}$$

For $\mathbf{V}_o$ and $\mathbf{V}_i$ to be in phase, $\dfrac{\mathbf{V}_o}{\mathbf{V}_i}$ must be purely real. This happens when

$$1 - \omega^2 R^2 C^2 = 0$$

$$\omega = \frac{1}{RC} = 2\pi f$$

or $$f = \frac{1}{2\pi RC}$$

www.konkur.in

At this frequency,

$$\mathbf{A}_v = \frac{\mathbf{V}_o}{\mathbf{V}_i} = \frac{1}{3} - \frac{R_2}{R_1 + R_2}$$

www.konkur.in

Chapter 10, Solution 91.

(a) Let $\mathbf{V}_2 =$ voltage at the noninverting terminal of the op amp

$\mathbf{V}_o =$ output voltage of the op amp

$\mathbf{Z}_p = 10\ \text{k}\Omega = R_o$

$$\mathbf{Z}_s = R + j\omega L + \frac{1}{j\omega C}$$

As in Section 10.9,

$$\frac{\mathbf{V}_2}{\mathbf{V}_o} = \frac{\mathbf{Z}_p}{\mathbf{Z}_s + \mathbf{Z}_p} = \frac{R_o}{R + R_o + j\omega L - \dfrac{j}{\omega C}}$$

$$\frac{\mathbf{V}_2}{\mathbf{V}_o} = \frac{\omega C R_o}{\omega C(R + R_o) + j(\omega^2 LC - 1)}$$

For this to be purely real,

$$\omega_o^2 LC - 1 = 0 \quad \longrightarrow \quad \omega_o = \frac{1}{\sqrt{LC}}$$

$$f_o = \frac{1}{2\pi\sqrt{LC}} = \frac{1}{2\pi\sqrt{(0.4\times10^{-3})(2\times10^{-9})}}$$

$$f_o = \mathbf{180\ kHz}$$

(b) At oscillation,

$$\frac{\mathbf{V}_2}{\mathbf{V}_o} = \frac{\omega_o C R_o}{\omega_o C(R + R_o)} = \frac{R_o}{R + R_o}$$

This must be compensated for by

$$\mathbf{A}_v = \frac{\mathbf{V}_o}{\mathbf{V}_2} = 1 + \frac{80}{20} = 5$$

$$\frac{R_o}{R + R_o} = \frac{1}{5} \quad \longrightarrow \quad R = 4R_o = \mathbf{40\ k?}$$

www.konkur.in

Chapter 10, Solution 92.

Let $\mathbf{V}_2 =$ voltage at the noninverting terminal of the op amp

$\mathbf{V}_o =$ output voltage of the op amp

$\mathbf{Z}_s = R_o$

$$\mathbf{Z}_p = j\omega L \parallel \frac{1}{j\omega C} \parallel R = \frac{1}{\frac{1}{R} + j\omega C + \frac{1}{j\omega L}} = \frac{\omega RL}{\omega L + jR(\omega^2 LC - 1)}$$

As in Section 10.9,

$$\frac{\mathbf{V}_2}{\mathbf{V}_o} = \frac{\mathbf{Z}_p}{\mathbf{Z}_s + \mathbf{Z}_p} = \frac{\dfrac{\omega RL}{\omega L + jR(\omega^2 LC - 1)}}{R_o + \dfrac{\omega RL}{\omega L + jR(\omega^2 LC - 1)}}$$

$$\frac{\mathbf{V}_2}{\mathbf{V}_o} = \frac{\omega RL}{\omega RL + \omega R_o L + jR_o R(\omega^2 LC - 1)}$$

For this to be purely real,

$$\omega_o^2 LC = 1 \longrightarrow f_o = \frac{1}{2\pi\sqrt{LC}}$$

(a) At $\omega = \omega_o$,

$$\frac{\mathbf{V}_2}{\mathbf{V}_o} = \frac{\omega_o RL}{\omega_o RL + \omega_o R_o L} = \frac{R}{R + R_o}$$

This must be compensated for by

$$\mathbf{A}_v = \frac{\mathbf{V}_o}{\mathbf{V}_2} = 1 + \frac{R_f}{R_o} = 1 + \frac{1000k}{100k} = 11$$

Hence,

$$\frac{R}{R + R_o} = \frac{1}{11} \longrightarrow R_o = 10R = \mathbf{100\ k?}$$

(b) $$f_o = \frac{1}{2\pi\sqrt{(10\times10^{-6})(2\times10^{-9})}}$$

$f_o =$ **1.125 MHz**

www.konkur.in

Chapter 10, Solution 93.

As shown below, the impedance of the feedback is

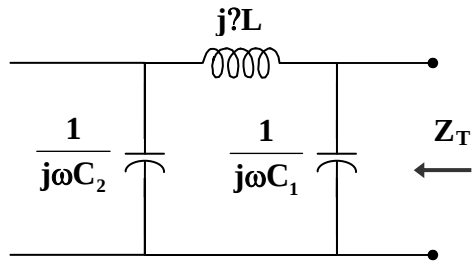

$$\mathbf{Z}_T = \frac{1}{j\omega C_1} \| \left(j\omega L + \frac{1}{j\omega C_2} \right)$$

$$\mathbf{Z}_T = \frac{\frac{-j}{\omega C_1}\left(j\omega L + \frac{-j}{\omega C_2} \right)}{\frac{-j}{\omega C_1} + j\omega L + \frac{-j}{\omega C_2}} = \frac{\frac{1}{\omega} - \omega L C_2}{j(C_1 + C_2 - \omega^2 L C_1 C_2)}$$

In order for $\mathbf{Z}_T$ to be real, the imaginary term must be zero; i.e.

$$C_1 + C_2 - \omega_o^2 L C_1 C_2 = 0$$

$$\omega_o^2 = \frac{C_1 + C_2}{L C_1 C_2} = \frac{1}{L C_T}$$

$$\mathbf{f_o = \frac{1}{2\pi\sqrt{LC_T}}}$$

www.konkur.in

Chapter 10, Solution 94.

If we select $C_1 = C_2 = 20$ nF

$$C_T = \frac{C_1 C_2}{C_1 + C_2} = \frac{C_1}{2} = 10 \text{ nF}$$

Since $f_o = \dfrac{1}{2\pi\sqrt{LC_T}}$,

$$L = \frac{1}{(2\pi f)^2 C_T} = \frac{1}{(4\pi^2)(2500 \times 10^6)(10 \times 10^{-9})} = 10.13 \text{ mH}$$

$$X_c = \frac{1}{\omega C_2} = \frac{1}{(2\pi)(50 \times 10^3)(20 \times 10^{-9})} = 159 \text{ ?}$$

We may select $R_i = 20\ \text{k}\Omega$ and $R_f \geq R_i$, say $R_f = 20\ \text{k}\Omega$.

Thus,

$C_1 = C_2 =$ **20 nF**, $L =$ **10.13 mH** $R_f = R_i =$ **20 k?**

www.konkur.in

Chapter 10, Solution 95.

First, we find the feedback impedance.

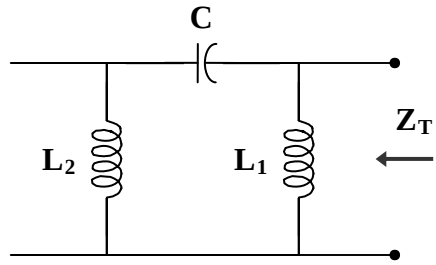

$$\mathbf{Z}_T = j\omega L_1 \,||\left(j\omega L_2 + \frac{1}{j\omega C}\right)$$

$$\mathbf{Z}_T = \frac{j\omega L_1\left(j\omega L_2 - \frac{j}{\omega C}\right)}{j\omega L_1 + j\omega L_2 - \frac{j}{\omega C}} = \frac{\omega^2 L_1 C(1-\omega L_2)}{j(\omega^2 C(L_1+L_2)-1)}$$

In order for $\mathbf{Z}_T$ to be real, the imaginary term must be zero; i.e.

$$\omega_o^2 C(L_1+L_2)-1=0$$

$$\omega_o = 2\pi f_o = \frac{1}{C(L_1+L_2)}$$

$$\boldsymbol{f_o = \frac{1}{2\pi\sqrt{C(L_1+L_2)}}}$$

www.konkur.in

Chapter 10, Solution 96.

(a) Consider the feedback portion of the circuit, as shown below.

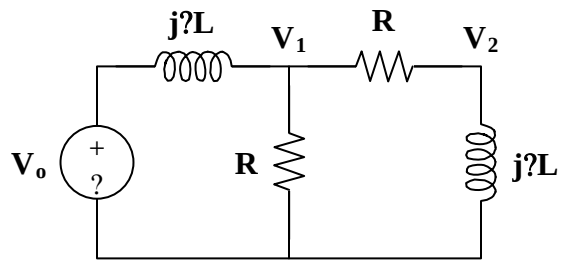

$$\mathbf{V_2} = \frac{j\omega L}{R + j\omega L}\mathbf{V_1} \longrightarrow \mathbf{V}_1 = \frac{R + j\omega L}{j\omega L}\mathbf{V}_2 \qquad (1)$$

Applying KCL at node 1,

$$\frac{\mathbf{V}_o - \mathbf{V}_1}{j\omega L} = \frac{\mathbf{V}_1}{R} + \frac{\mathbf{V}_1}{R + j\omega L}$$

$$\mathbf{V}_o - \mathbf{V}_1 = j\omega L\,\mathbf{V}_1\left(\frac{1}{R} + \frac{1}{R + j\omega L}\right)$$

$$\mathbf{V}_o = \mathbf{V}_1\left(1 + \frac{j2\omega RL - \omega^2 L^2}{R\,(R + j\omega L)}\right)$$

(2)

From (1) and (2),

$$\mathbf{V}_o = \left(\frac{R + j\omega L}{j\omega L}\right)\left(1 + \frac{j2\omega RL - \omega^2 L^2}{R\,(R + j\omega L)}\right)\mathbf{V}_2$$

$$\frac{\mathbf{V}_o}{\mathbf{V}_2} = \frac{R^2 + j\omega RL + j2\omega RL - \omega^2 L^2}{j\omega RL}$$

$$\frac{\mathbf{V}_2}{\mathbf{V}_o} = \frac{1}{3 + \dfrac{R^2 - \omega^2 L^2}{j\omega RL}}$$

$$\frac{\mathbf{V}_2}{\mathbf{V}_o} = \frac{\mathbf{1}}{\mathbf{3 + j(\omega L/R - R/\omega L)}}$$

www.konkur.in

(b) Since the ratio $\frac{\mathbf{V}_2}{\mathbf{V}_o}$ must be real,

$$\frac{\omega_o L}{R} - \frac{R}{\omega_o L} = 0$$

$$\omega_o L = \frac{R^2}{\omega_o L}$$

$$\omega_o = 2\pi f_o = \frac{R}{L}$$

$$\mathbf{f_o = \frac{R}{2\pi L}}$$

(c) When $\omega = \omega_o$

$$\frac{\mathbf{V}_2}{\mathbf{V}_o} = \frac{1}{3}$$

This must be compensated for by $\mathbf{A}_v = 3$. But

$$\mathbf{A}_v = 1 + \frac{R_2}{R_1} = 3$$

$$\mathbf{R_2 = 2R_1}$$

www.konkur.in

Chapter 11, Solution 1.

$v(t) = 160\cos(50t)$

$i(t) = -33\sin(50t-30^\circ) = 33\cos(50t-30^\circ+180^\circ-90^\circ) = 33\cos(50t+60^\circ)$

$p(t) = v(t)i(t) = 160x33\cos(50t)\cos(50t+60^\circ)$
$= 5280(1/2)[\cos(100t+60^\circ)+\cos(60^\circ)] =$ **[1.320+2.640cos(100t+60˚)] kW**.

$P = [V_m I_m/2]\cos(0-60^\circ) = 0.5x160x33x0.5 =$ **1.320 kW**.

www.konkur.in

Chapter 11, Solution 2.

Using current division,

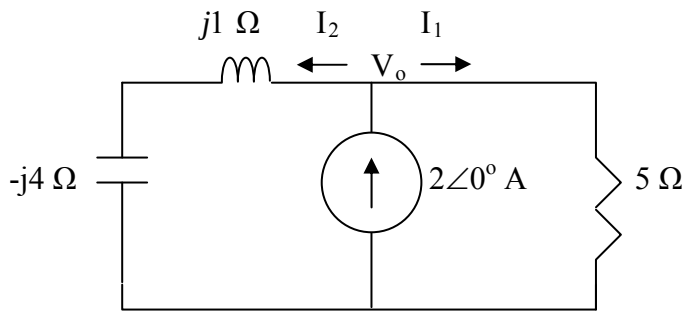

$$I_1 = \frac{j1 - j4}{5 + j1 - j4}(2) = \frac{-j6}{5 - j3}$$

$$I_2 = \frac{5}{5 + j1 - j4}(2) = \frac{10}{5 - j3}$$

For the inductor and capacitor, the average power is zero. For the resistor,

$$P = \frac{1}{2}|I_1|^2 R = \frac{1}{2}(1.029)^2(5) = 2.647 \text{ W}$$

$$V_o = 5I_1 = -2.6471 - j4.4118$$

$$S = \frac{1}{2}V_o I^* = \frac{1}{2}(-2.6471 - j4.4118)x2 = -2.6471 - j4.4118$$

Hence the average power supplied by the current source is **2.647 W**.

www.konkur.in

Chapter 11, Solution 3.

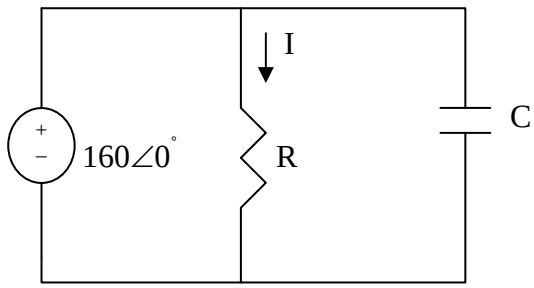

$$90\ \mu\text{F} \longrightarrow \frac{1}{j\omega C} = \frac{1}{j90x10^{-6}x2x10^{3}} = -j5.5556$$

I = 160/60 = 2.667A

The average power delivered to the load is the same as the average power absorbed by the resistor which is

$$P_{avg} = 0.5|I|^2 60 = \mathbf{213.4\ W}.$$

www.konkur.in

Chapter 11, Solution 4.

Using Fig. 11.36, design a problem to help other students better understand instantaneous and average power.

Although there are many ways to work this problem, this is an example based on the same kind of problem asked in the third edition.

Problem

Find the average power dissipated by the resistances in the circuit of Fig. 11.36. Additionally, verify the conservation of power. Note, we do not talk about rms values of voltages and currents until Section 11.4, all voltages and currents are peak values.

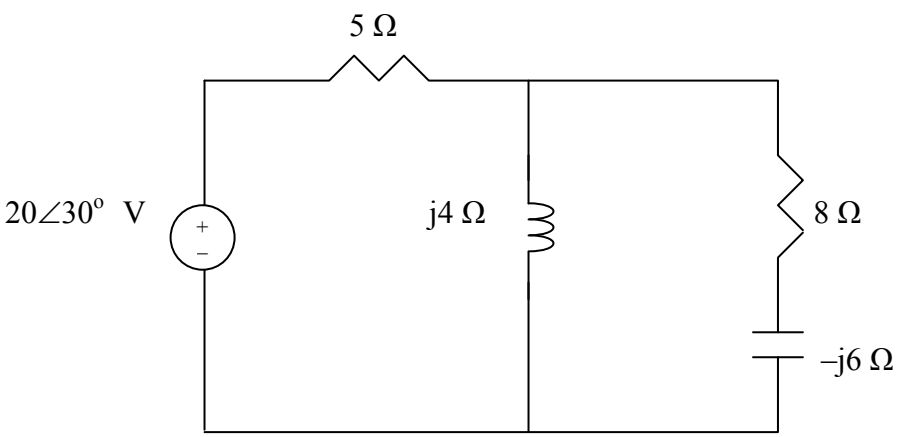

Figure 11.36 For Prob. 11.4.

Solution

We apply nodal analysis. At the main node,

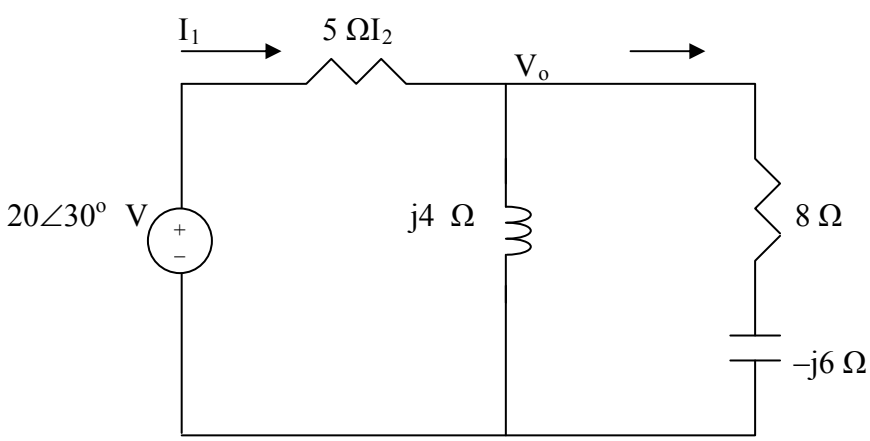

www.konkur.in

$$\frac{20<30^o - V_o}{5} = \frac{V_o}{j4} + \frac{V_o}{8-j6} \quad \longrightarrow \quad V_o = 5.152 + j10.639 = 11.821\angle 64.16^\circ$$

For the 5-Ω resistor,

$$I_1 = \frac{20<30^o - V_o}{5} = 2.438<-3.0661^o \text{ A}$$

The average power dissipated by the resistor is

$$P_1 = \frac{1}{2}|I_1|^2 R_1 = \frac{1}{2}x2.438^2 x5 = \underline{14.86 \text{ W}}$$

For the 8-Ω resistor,

$$\mathbf{I_2} = V_o/(8-j6) = (11.812/10)\angle(64.16+36.87)^\circ = 1.1812\angle 101.03^\circ \text{ A}$$

The average power dissipated by the resistor is

$$P_2 = 0.5|I_2|^2R_2 = 0.5(1.1812)^2 8 = \mathbf{5.581\ W}$$

The complex power supplied is

$$\mathbf{S} = 0.5(V_s)(I_1)^* = 0.5(20\angle 30^\circ)(2.438\angle 3.07^\circ) = 24.38\angle 33.07^\circ$$

$$= \mathbf{(20.43+13.303)\ VA}$$

Adding P_1 and P_2 gives the real part of **S**, showing the conservation of power.

P = 14.86+5.581 = **20.44 W** which checks nicely.

www.konkur.in

Chapter 11, Solution 5.

Converting the circuit into the frequency domain, we get:

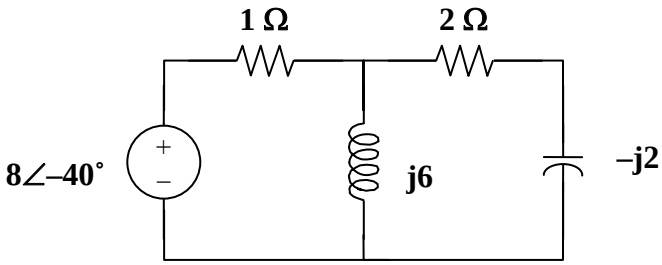

$$I_{1\Omega} = \frac{8\angle -40°}{1 + \dfrac{j6(2-j2)}{j6+2-j2}} = 1.6828\angle -25.38°$$

$$P_{1\Omega} = \frac{1.6828^2}{2}1 = \underline{1.4159\,\text{W}}$$

$P_{1\Omega}$ = **1.4159 W**

$P_{3H} = P_{0.25F}$ = **0 W**

$$|I_{2\Omega}| = \left|\frac{j6}{j6+2-j2}1.6828\angle -25.38°\right| = 2.258$$

$$P_{2\Omega} = \frac{2.258^2}{2}2 = \underline{5.097\,\text{W}}$$

$P_{2\Omega}$ = **5.097 W**

Chapter 11, Solution 6.

$$20\text{ mH} \longrightarrow j\omega L = j10^3 x20x10^{-3} = j20$$

$$40\mu\text{F} \rightarrow \frac{1}{j\omega C} = \frac{1}{j10^3 x40x10^{-6}} = -j25$$

We apply nodal analysis to the circuit below.

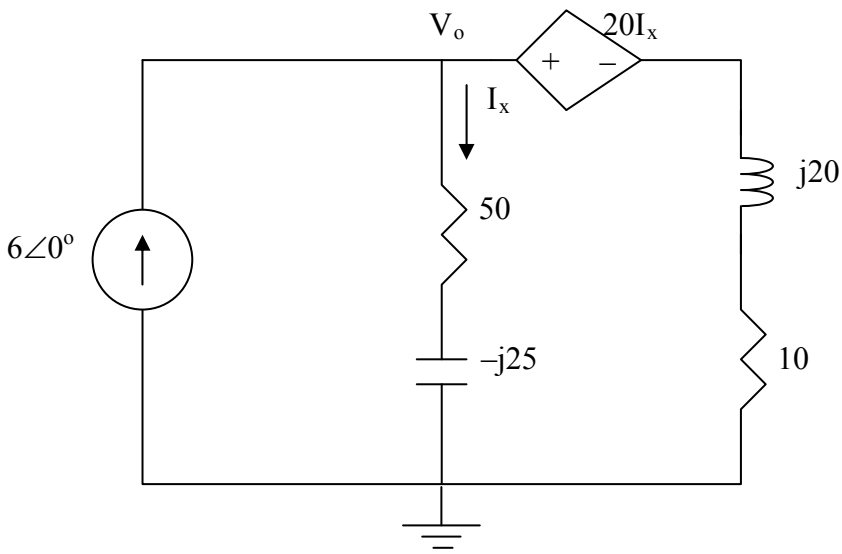

$$-6 + \frac{V_o - 20I_x}{10 + j20} + \frac{V_o - 0}{50 - j25} = 0$$

But $I_x = \dfrac{V_o}{50 - j25}$. Substituting this and solving for V_o leads

$$\left(\frac{1}{10 + j20} - \frac{20}{(10 + j20)}\frac{1}{(50 - j25)} + \frac{1}{50 - j25}\right)V_o = 6$$

$$\left(\frac{1}{22.36\angle 63.43°} - \frac{20}{(22.36\angle 63.43°)(55.9\angle -26.57°)} + \frac{1}{55.9\angle -26.57°}\right)V_o = 6$$

$$(0.02 - j0.04 - 0.012802 + j0.009598 + 0.016 + j0.008)V_o = 6$$

$(0.0232 - j0.0224)V_o = 6$ or $V_o = 6/(0.03225\angle -43.99^\circ) = 186.05\angle 43.99^\circ$ volts.

$|I_x| = 186.05/55.9 = 3.328$

We can now calculate the average power absorbed by the 50-Ω resistor.

$$P_{avg} = [(3.328)^2/2]x50 = \mathbf{276.8\ W}.$$

www.konkur.in

Chapter 11, Solution 7.

Applying KVL to the left-hand side of the circuit,

$$8\angle 20° = 4\mathbf{I}_o + 0.1\mathbf{V}_o \qquad (1)$$

Applying KCL to the right side of the circuit,

$$8\mathbf{I}_o + \frac{\mathbf{V}_1}{j5} + \frac{\mathbf{V}_1}{10 - j5} = 0$$

But, $$\mathbf{V}_o = \frac{10}{10 - j5}\mathbf{V}_1 \longrightarrow \mathbf{V}_1 = \frac{10 - j5}{10}\mathbf{V}_o$$

Hence, $$8\mathbf{I}_o + \frac{10 - j5}{j50}\mathbf{V}_o + \frac{\mathbf{V}_o}{10} = 0$$

$$\mathbf{I}_o = j0.025\mathbf{V}_o \qquad (2)$$

Substituting (2) into (1),

$$8\angle 20° = 0.1\mathbf{V}_o(1 + j)$$

$$\mathbf{V}_o = \frac{80\angle 20°}{1 + j}$$

$$\mathbf{I}_1 = \frac{\mathbf{V}_o}{10} = \frac{8}{\sqrt{2}}\angle -25°$$

$$P = \frac{1}{2}|\mathbf{I}_1|^2 R = \left(\frac{1}{2}\right)\left(\frac{64}{2}\right)(10) = \mathbf{160W}$$

www.konkur.in

Chapter 11, Solution 8.

We apply nodal analysis to the following circuit.

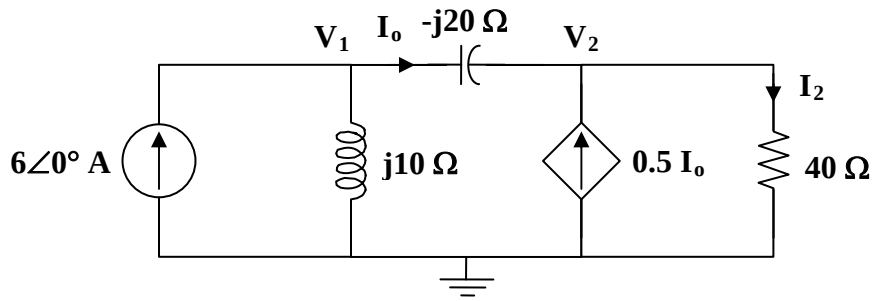

At node 1,

$$6 = \frac{\mathbf{V}_1}{j10} + \frac{\mathbf{V}_1 - \mathbf{V}_2}{-j20} \quad \mathbf{V}_1 = j120 - \mathbf{V}_2 \qquad (1)$$

At node 2,

$$0.5\mathbf{I}_o + \mathbf{I}_o = \frac{\mathbf{V}_2}{40}$$

But, $$\mathbf{I}_o = \frac{\mathbf{V}_1 - \mathbf{V}_2}{-j20}$$

Hence, $$\frac{1.5(\mathbf{V}_1 - \mathbf{V}_2)}{-j20} = \frac{\mathbf{V}_2}{40}$$

$$3\mathbf{V}_1 = (3 - j)\mathbf{V}_2 \qquad (2)$$

Substituting (1) into (2),

$$j360 - 3\mathbf{V}_2 - 3\mathbf{V}_2 + j\mathbf{V}_2 = 0$$

$$\mathbf{V}_2 = \frac{j360}{6 - j} = \frac{360}{37}(-1 + j6)$$

$$\mathbf{I}_2 = \frac{\mathbf{V}_2}{40} = \frac{9}{37}(-1 + j6)$$

$$P = \frac{1}{2}|\mathbf{I}_2|^2 R = \frac{1}{2}\left(\frac{9}{\sqrt{37}}\right)^2 (40) = \mathbf{43.78\ W}$$

www.konkur.in

Chapter 11, Solution 9.

This is a non-inverting op amp circuit. At the output of the op amp,

$$V_o = \left(1 + \frac{Z_2}{Z_1}\right)V_s = \left(1 + \frac{(10 + j6)x10^3}{(2 + j4)x10^3}\right)(8.66 + j5) = 20.712 + j28.124$$

The current through the 20-kς resistor is

$$I_o = \frac{V_o}{20k - j12k} = 0.1411 + j1.491 \text{ mA} \quad \text{or } |I_o| = 1.4975 \text{ A}$$

$$P = [|I_o|^2/2]R = [1.4875^2/2]10^{-6}x20x10^3$$

$$= \mathbf{22.42\ mW}$$

www.konkur.in

Chapter 11, Solution 10.

No current flows through each of the resistors. Hence, for each resistor, $P = \mathbf{0\ W}$. It should be noted that the input voltage will appear at the output of each of the op amps.

www.konkur.in

Chapter 11, Solution 11.

$$\omega = 377, \qquad R = 10^4, \qquad C = 200 \times 10^{-9}$$
$$\omega RC = (377)(10^4)(200 \times 10^{-9}) = 0.754$$
$$\tan^{-1}(\omega RC) = 37.02°$$

$$Z_{ab} = \frac{10k}{\sqrt{1+(0.754)^2}} \angle -37.02° = 7.985\angle -37.02° \text{ k}\Omega$$

$$i(t) = 33\sin(377t + 22°) = 33\cos(377t - 68°)\ mA$$
$$\mathbf{I} = 33\angle -68^\circ \text{ mA}$$
$$S = \frac{I^2 Z_{ab}}{2} = \frac{\left(33x10^{-3}\right)^2 (7.985\angle -37.02°) \times 10^3}{2}$$
$$\mathbf{S} = 4.348\angle -37.02^\circ \text{ VA}$$

$$P = |S|\cos(37.02) = \mathbf{3.472\ W}$$

www.konkur.in

Chapter 11, Solution 12.

We find the Thevenin impedance using the circuit below.

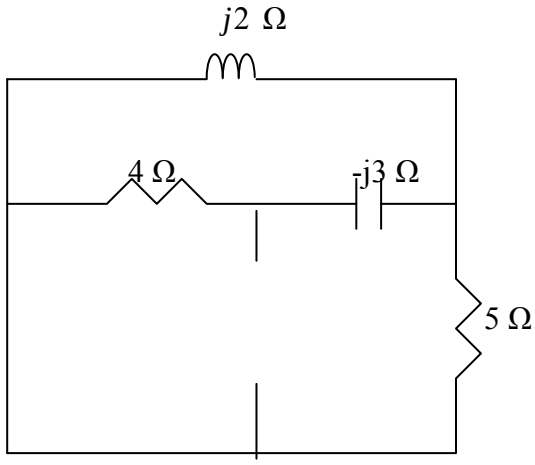

We note that the inductor is in parallel with the 5-Ω resistor and the combination is in series with the capacitor. That whole combination is in parallel with the 4-Ω resistor. Thus,

$$Z_{Thev} = \frac{4\left(-j3 + \dfrac{5xj2}{5+j2}\right)}{4 - j3 + \dfrac{5xj2}{5+j2}} = \frac{4(0.6896 - j1.2758)}{4.69 - j1.2758} = \frac{4(1.4502\angle -61.61°)}{4.86\angle -15.22°}$$

$$= 1.1936\angle -46.39°$$

$Z_{Thev} = 0.8233 - j0.8642$ or Z_L = **[823.3 + j864.2] mΩ**.

We obtain V_{Th} using the circuit below. We apply nodal analysis.

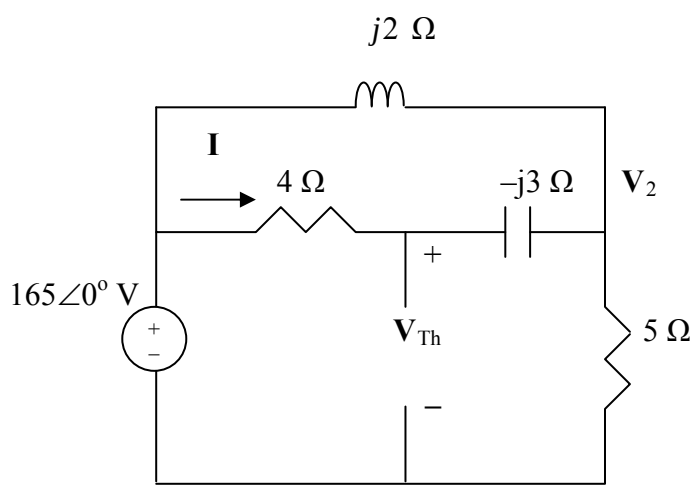

www.konkur.in

$$\frac{V_2-165}{4-j3}+\frac{V_2-165}{j2}+\frac{V_2-0}{5}=0$$

$$(0.16+j0.12-j0.5+0.2)V_2=(0.16+j0.12-j0.5)165 \quad 4.125$$

$$(0.5235\angle-46.55°)V_2=(0.4123\angle-67.17°)165$$

Thus, $V_2 = 129.94\angle{-20.62}^\circ V = 121.62 - j45.76$

$I = (165 - V_2)/(4 - j3) = (165 - 121.62 + j45.76)/(4 - j3)$
$= (63.06\angle 46.52^\circ)/(5\angle{-36.87}^\circ) = 12.613\angle 83.39^\circ = 1.4519 + j12.529$

$V_{Thev} = 165 - 4I = 165 - 5.808 - j50.12 = [159.19 - j50.12]$ V
$= 166.89\angle{-17.48}^\circ V$

We can check our value of V_{Thev} by letting $V_1 = V_{Thev}$. Now we can use nodal analysis to solve for V_1.

At node 1,

$$\frac{V_1-165}{4}+\frac{V_1-V_2}{-j3}+\frac{V_2-0}{5}=0 \rightarrow (0.25+j0.3333)V_1+(0.2-j0.3333)V_2=41.25$$

At node 2,

$$\frac{V_2-V_1}{-j3}+\frac{V_2-165}{j2}=0 \rightarrow -j0.3333V_1+(-j0.1667)V_2=-j82.5$$

```
>> Y=[(0.25+0.3333i),-0.3333i;-0.3333i,(0.2-0.1667i)]

Y =

  0.2500 + 0.3333i        0 - 0.3333i
      0 - 0.3333i   0.2000 - 0.1667i

>> I=[41.25;–82.5i]

I =

  41.2500
       0 -20.0000i

>> V=inv(Y)*I

V =
```

www.konkur.in

159.2221 – 50.1018i
121.6421–45.7677i

Please note, these values check with the ones obtained above.

To calculate the maximum power to the load,

$|I_L| = (166.89/(2x0.8233)) = 101.34$ A

$P_{avg} = [(|I_L|_{rms})^2 0.8233]/2 =$ **4.228 mW**.

www.konkur.in

Chapter 11, Solution 13.

For maximum power transfer to the load, $\mathbf{Z_L}$ = **[120 – j60] Ω**.

I_L = 165/(240) = 0.6875 A

$$P_{avg} = [|I_L|^2 120]/2 = \mathbf{28.36\ W}.$$

www.konkur.in

Chapter 11, Solution 14.

Using Fig. 11.45, design a problem to help other students better understand maximum average power transfer.

Although there are many ways to work this problem, this is an example based on the same kind of problem asked in the third edition.

Problem

It is desired to transfer maximum power to the load Z in the circuit of Fig. 11.45. Find Z and the maximum power. Let $i_s = 5\cos 40t$ A.

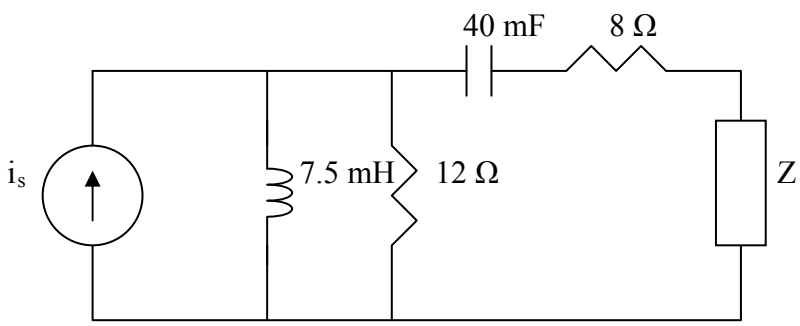

Figure 11.45 For Prob. 11.14.

Solution

We find the Thevenin equivalent at the terminals of Z.

$$40 \text{ mF} \longrightarrow \frac{1}{j\omega C} = \frac{1}{j40x40x10^{-3}} = j0.625$$

$$7.5 \text{ mH} \longrightarrow j\omega L = j40x7.5x10^{-3} = j0.3$$

To find Z_{Th}, consider the circuit below.

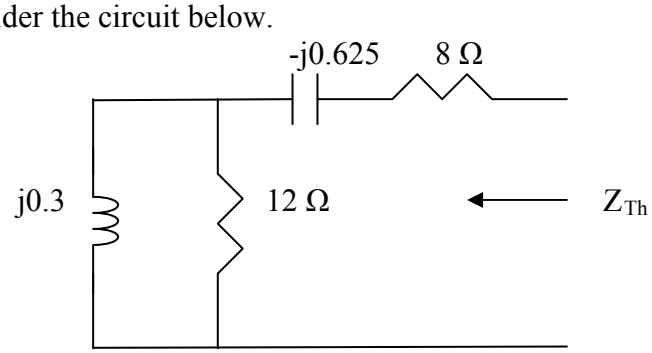

www.konkur.in

$$Z_{Th} = 8 - j0.625 + 12 // j0.3 = 8 - j0.625 + \frac{12x0.3}{12+0.3} = 8.0075 - j0.3252$$

$$Z_L = (Z_{Thev})^* = \mathbf{[8.008 + j0.3252]\ \Omega}.$$

To find V_{Th}, consider the circuit below.

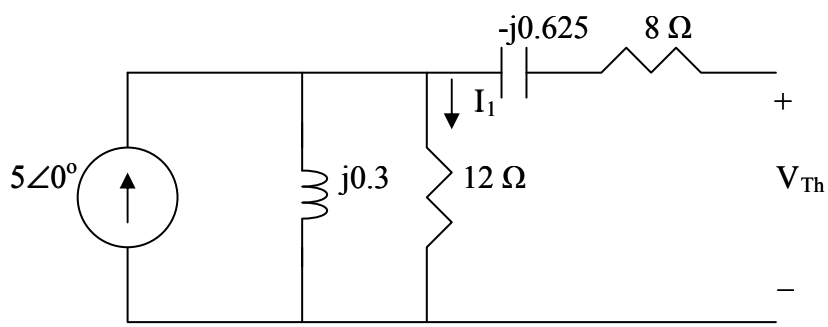

By current division,

$I_1 = 5(j0.3)/(12+j0.3) = 1.5\angle 90^\circ / 12.004\angle 1.43^\circ = 0.12496\angle 88.57^\circ$

$= 0.003118 + j0.12492A$

$V_{Thev\ rms} = 12I_1/\sqrt{2} = 1.0603\angle 88.57^\circ V$

$I_{Lrms} = 1.0603\angle 88.57^\circ / 2(8.008) = 66.2\angle 88.57^\circ mA$

$P_{avg} = |I_{Lrms}|^2 8.008 =$ **35.09 mW**.

www.konkur.in

Chapter 11, Solution 15.

To find $\mathbf{Z}_{eq}$, insert a 1-A current source at the load terminals as shown in Fig. (a).

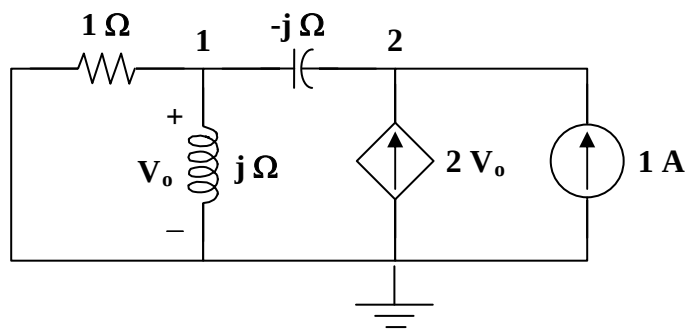

(a)

At node 1,

$$\frac{\mathbf{V}_o}{1} + \frac{\mathbf{V}_o}{j} = \frac{\mathbf{V}_2 - \mathbf{V}_o}{-j} \longrightarrow \mathbf{V}_o = j\mathbf{V}_2 \qquad (1)$$

At node 2,

$$1 + 2\mathbf{V}_o = \frac{\mathbf{V}_2 - \mathbf{V}_o}{-j} \longrightarrow 1 = j\mathbf{V}_2 - (2+j)\mathbf{V}_o \qquad (2)$$

Substituting (1) into (2),

$$1 = j\mathbf{V}_2 - (2+j)(j)\mathbf{V}_2 = (1-j)\mathbf{V}_2$$

$$\mathbf{V}_2 = \frac{1}{1-j}$$

$$\mathbf{Z}_{eq} = \frac{\mathbf{V}_2}{1} = \frac{1+j}{2} = 0.5 + j0.5$$

$$\mathbf{Z}_L = \mathbf{Z}_{eq}^* = \mathbf{[0.5 - j0.5]\,\Omega}$$

We now obtain $\mathbf{V}_{Thev}$ from Fig. (b).

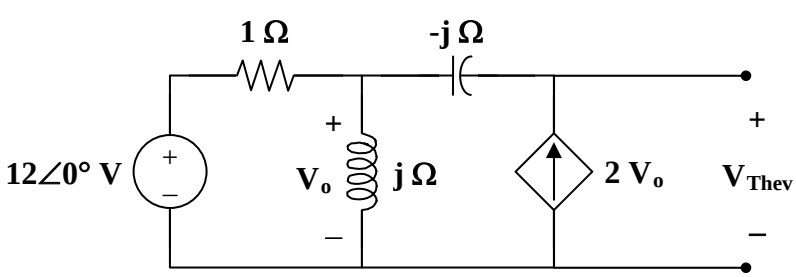

(b)

$$-2\mathbf{V}_o + \frac{\mathbf{V}_o - 12}{1} + \frac{\mathbf{V}_o}{j} = 0$$

www.konkur.in

$$\mathbf{V}_o = \frac{-12}{1+j}$$

$$-\mathbf{V}_o - (-j \times 2\mathbf{V}_o) + \mathbf{V}_{Th} = 0$$

$$\mathbf{V}_{Thev} = (1-j2)\mathbf{V}_o = \frac{(-12)(1-j2)}{1+j}$$

$$P_{max} = \frac{\left|\left[\frac{V_{Thev}}{0.5+j0.5+0.5-j0.5}\right]\right|^2}{2} 0.5 = \frac{\left(\frac{12\sqrt{5}}{\sqrt{2}}\right)^2}{2(2x0.5)^2} 0.5$$

$$= \mathbf{90\ W}$$

www.konkur.in

Chapter 11, Solution 16.

$$\omega = 4, \quad 1\text{H} \longrightarrow j\omega L = j4, \quad 1/20\text{F} \longrightarrow \frac{1}{j\omega C} = \frac{1}{j4x1/20} = -j5$$

We find the Thevenin equivalent at the terminals of Z_L. To find V_{Thev}, we use the circuit shown below.

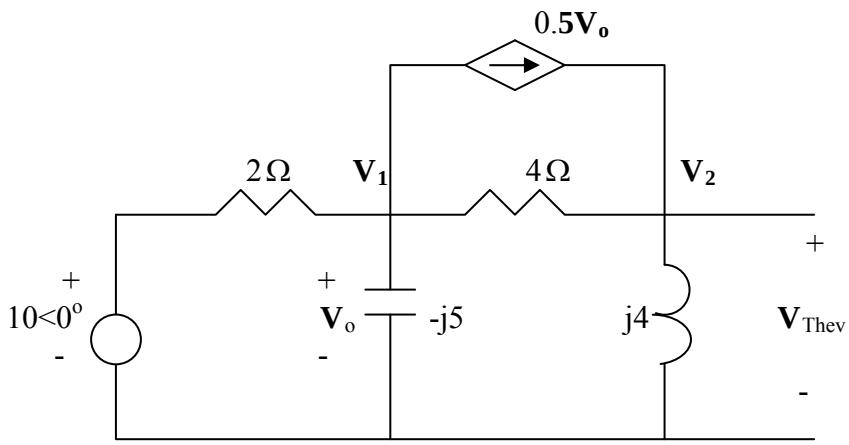

At node 1,

$$\frac{10 - V_1}{2} = \frac{V_1}{-j5} + 0.5V_1 + \frac{V_1 - V_2}{4} \longrightarrow 5 = V_1(1.25 + j0.2) - 0.25V_2 \qquad (1)$$

At node 2,

$$\frac{V_1 - V_2}{4} + 0.25V_1 = \frac{V_2}{j4} \longrightarrow 0 = 0.5V_1 + V_2(-0.25 + j0.25) \qquad (2)$$

Solving (1) and (2) leads to

$$V_{Thev} = V_2 = 6.1947 + j7.0796 = 9.4072\angle 48.81^o$$

www.konkur.in

To obtain R_{eq}, consider the circuit shown below. We replace Z_L by a 1-A current source.

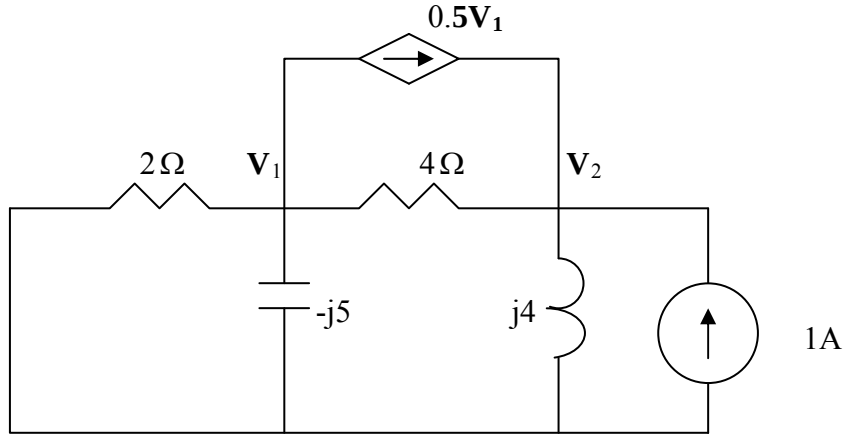

At node 1,

$$\frac{V_1}{2}+\frac{V_1}{-j5}+0.25V_1+\frac{V_1-V_2}{4}=0 \longrightarrow 0=V_1(1+j0.2)-0.25V_2 \qquad (3)$$

At node 2,

$$1+\frac{V_1-V_2}{4}+0.25V_1=\frac{V_2}{j4} \longrightarrow -1=0.5V_1+V_2(-0.25+j0.25) \qquad (4)$$

Solving (1) and (2) gives

$$Z_{eq}=\frac{V_2}{1}=1.9115+j3.3274=3.837\angle 60.12^o \text{ and } \mathbf{Z_L}=3.837\angle -60.12^\circ\ \Omega$$

$$P_{\max}=\frac{|V_{Th}|^2}{2|Z_{eq}-Z_L|^2}1.9115=\frac{9.4072^2}{2x4x1.9115}=\mathbf{5.787\ W}$$

www.konkur.in

Chapter 11, Solution 17.

We find Z_{eq} at terminals a-b following Fig. (a).

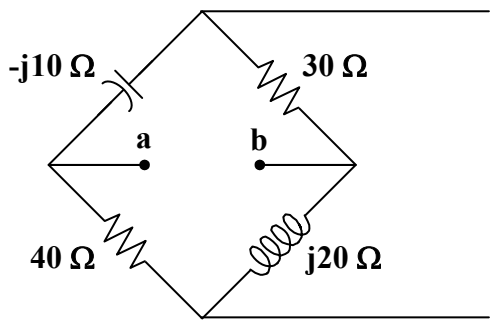

(a)

$$\mathbf{Z}_{eq} = (-j10+30)\,||\,(j20+40) = \frac{(30-j10)(40+j20)}{70+j10} = \mathbf{20\ \Omega} = \mathbf{Z_L}$$

We obtain $\mathbf{V}_{Thev}$ from Fig. (b).

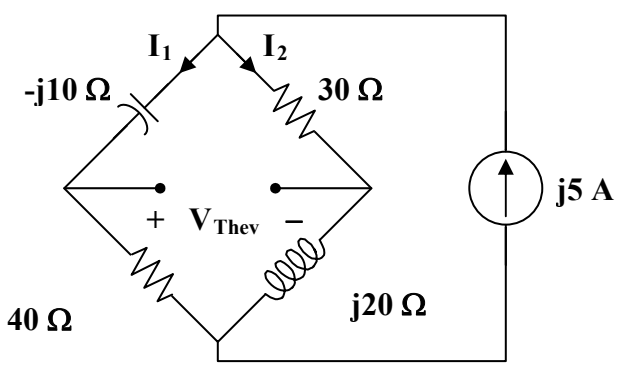

(b)

Using current division,

$$\mathbf{I}_1 = \frac{30+\text{j}20}{70+\text{j}10}(\text{j}5) = -1.1+\text{j}2.3$$

$$\mathbf{I}_2 = \frac{40-\text{j}10}{70+\text{j}10}(\text{j}5) = 1.1+\text{j}2.7$$

$$\mathbf{V}_{\text{Th}} = 30\mathbf{I}_2 + \text{j}10\mathbf{I}_1 = 10+\text{j}70$$

$$P_{\max} = \frac{\left|\mathbf{V}_{Th}\right|^2}{2\left(Z_{eq}+Z_L\right)^2} Z_L = \frac{5000}{(2)(2x20)^2}20 = \mathbf{31.25\ W}$$

www.konkur.in

Chapter 11, Solution 18.

We find $\mathbf{Z}_{\text{Th}}$ at terminals a-b as shown in the figure below.

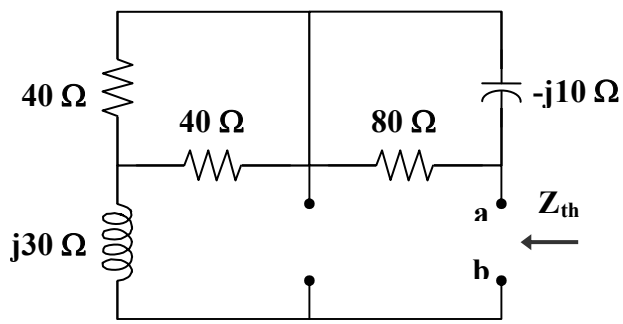

$$\mathbf{Z}_{Th} = j30 + 40 \,||\, 40 + 80 \,||\, (\text{-j}10) = \text{j}30 + 20 + \frac{(80)(\text{-j}10)}{80 - \text{j}10}$$

$$\mathbf{Z}_{Th} = 21.23 + j20.154$$

$$\mathbf{Z}_{\text{L}} = \mathbf{Z}_{\text{Th}}^{*} = \mathbf{[21.23–j20.15]\ \Omega}$$

www.konkur.in

Chapter 11, Solution 19.

At the load terminals,

$$\mathbf{Z}_{\text{Th}} = -j2 + 6 \,||\, (3 + j) = -j2 + \frac{(6)(3+j)}{9+j}$$

$$\mathbf{Z}_{\text{Th}} = 2.049 - j1.561$$

$$R_L = \left| \mathbf{Z}_{\text{Th}} \right| = \mathbf{2.576\ \Omega}$$

To get $\mathbf{V}_{\text{Th}}$, let $\mathbf{Z} = 6 \,||\, (3 + j) = 2.049 + j0.439$.

By transforming the current sources, we obtain

$$\mathbf{V}_{Th} = (33\angle 0^\circ)\mathbf{Z} = 67.62 + j14.487 = 69.16\angle 12.09^\circ$$

$$P_{max} = \left| \frac{69.16}{2.049 - j1.561 + 2.576} \right|^2 \frac{2.576}{2} = \mathbf{258.5\ W}.$$

www.konkur.in

Chapter 11, Solution 20.

Combine j20 Ω and -j10 Ω to get $j20 \parallel -j10 = -j20$.

To find $\mathbf{Z}_{Th}$, insert a 1-A current source at the terminals of R_L, as shown in Fig. (a).

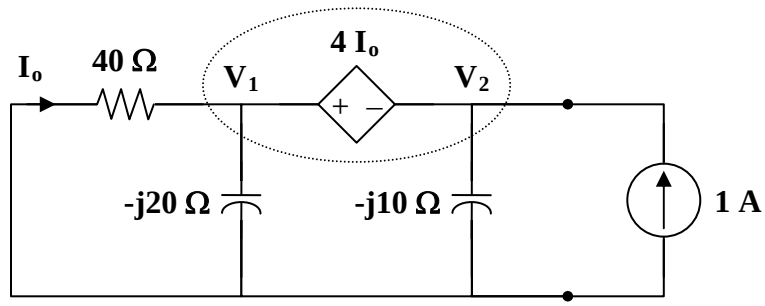

(a)

At the supernode,

$$1 = \frac{\mathbf{V}_1}{40} + \frac{\mathbf{V}_1}{-j20} + \frac{\mathbf{V}_2}{-j10}$$

$$40 = (1 + j2)\mathbf{V}_1 + j4\mathbf{V}_2 \qquad (1)$$

Also, $\mathbf{V}_1 = \mathbf{V}_2 + 4\mathbf{I}_o$, where $\mathbf{I}_o = \dfrac{-\mathbf{V}_1}{40}$

$$1.1\mathbf{V}_1 = \mathbf{V}_2 \longrightarrow \mathbf{V}_1 = \frac{\mathbf{V}_2}{1.1} \qquad (2)$$

Substituting (2) into (1),

$$40 = (1 + j2)\left(\frac{\mathbf{V}_2}{1.1}\right) + j4\mathbf{V}_2$$

$$\mathbf{V}_2 = \frac{44}{1 + j6.4}$$

$$\mathbf{Z}_{Th} = \frac{\mathbf{V}_2}{1} = 1.05 - j6.71\,\Omega$$

$$R_L = \left|\mathbf{Z}_{Th}\right| = \mathbf{6.792\,\Omega}$$

www.konkur.in

To find $\mathbf{V}_{Th}$, consider the circuit in Fig. (b).

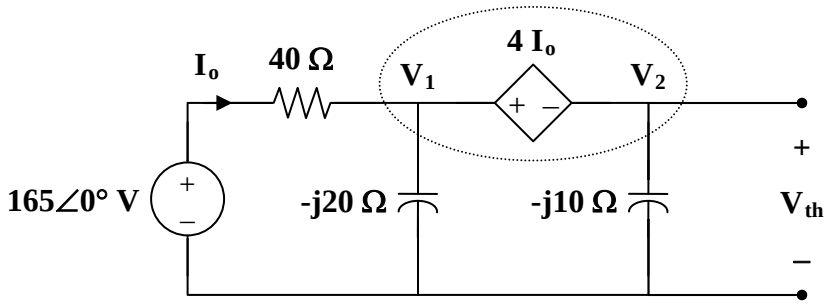

(b)

At the supernode,

$$\frac{165-\mathbf{V}_1}{40}=\frac{\mathbf{V}_1}{-j20}+\frac{\mathbf{V}_2}{-j10}$$

$$165=(1+j2)\mathbf{V}_1+j4\mathbf{V}_2 \qquad (3)$$

Also, $\mathbf{V}_1=\mathbf{V}_2+4\mathbf{I}_o$, where $\mathbf{I}_o=\dfrac{165-\mathbf{V}_1}{40}$

$$\mathbf{V}_1=\frac{\mathbf{V}_2+16.5}{1.1} \qquad (4)$$

Substituting (4) into (3),

$$150-j30=(0.9091+j5.818)\mathbf{V}_2$$

$$\mathbf{V}_{Th}=\mathbf{V}_2=\frac{150-j30}{0.9091+j5.818}=\frac{152.97\angle-11.31°}{5.889\angle 81.12°}=25.98\angle-92.43°$$

$$P_{max}=\left|\frac{25.98}{1.05-j6.71+6.792}\right|^2\frac{6.792}{2}=\mathbf{21.51\ W}$$

www.konkur.in

Chapter 11, Solution 21.

We find $\mathbf{Z}_{Th}$ at terminals a-b, as shown in the figure below.

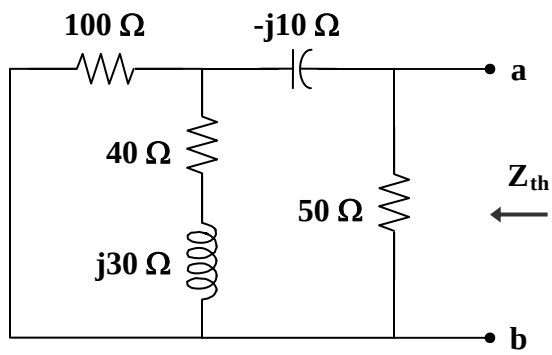

$$\mathbf{Z}_{Th} = 50 \,||\, [\,-\,j10 + 100 \,||\, (40 + j30)\,]$$

where $100 \,||\, (40 + j30) = \dfrac{(100)(40 + j30)}{140 + j30} = 31.707 + j14.634$

$$\mathbf{Z}_{Th} = 50 \,||\, (31.707 + j4.634) = \frac{(50)(31.707 + j4.634)}{81.707 + j4.634}$$

$$\mathbf{Z}_{Th} = 19.5 + j1.73$$

$$R_L = \left|\mathbf{Z}_{Th}\right| = \mathbf{19.58\ \Omega}$$

www.konkur.in

Chapter 11, Solution 22.

i(t) = [2–2cos(2t)] amps

$$I_{rms}^2 = \frac{1}{\pi}\left[\int_0^{\pi}[2 - 2\cos(2t)]^2\,dt\right]$$

$$= \frac{1}{\pi}\left[\int_0^{\pi} 4dt + \int_0^{\pi}[-4\cos(2t)]dt + \int_0^{\pi} 4\cos^2(2t)dt\right]$$

$$= \frac{1}{\pi}\left[4\pi + 0 + 4\int_0^{\pi}\left[\frac{1+\cos(4t)}{2}\right]dt\right] = \frac{1}{\pi}\left[4\pi + 4\left(\frac{\pi}{2}\right)\right] = 6$$

$$I_{rms} = \sqrt{6} = 2.449 \text{ amps}$$

www.konkur.in

Chapter 11, Solution 23.

Using Fig. 11.54, design a problem to help other students to better understand how to find the rms value of a waveshape.

Although there are many ways to work this problem, this is an example based on the same kind of problem asked in the third edition.

Problem

Determine the rms value of the voltage shown in Fig. 11.54.

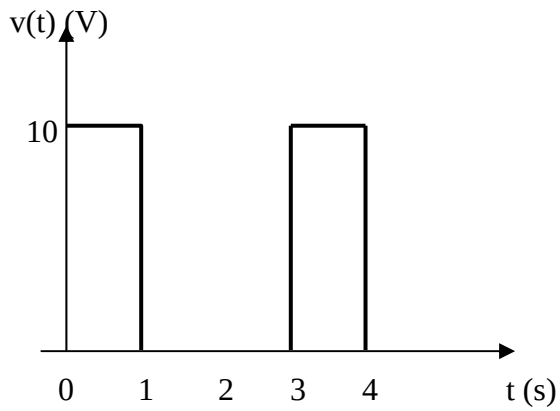

Figure 11.54 For Prob. 11.23.

Solution

$$V_{rms}^2 = \frac{1}{T}\int_0^T v^2(t)dt = \frac{1}{3}\int_0^1 10^2\,dt = \frac{100}{3}$$

V_{rms} = **5.7735 V**

www.konkur.in

Chapter 11, Solution 24.

$$T = 2, \qquad v(t) = \begin{cases} 5, & 0 < t < 1 \\ -5, & 1 < t < 2 \end{cases}$$

$$V_{rms}^2 = \frac{1}{2}\left[\int_0^1 5^2\ dt + \int_1^2 (-5)^2\ dt\right] = \frac{25}{2}[1+1] = 25$$

$$V_{rms} = \mathbf{5\ V}$$

www.konkur.in

Chapter 11, Solution 25.

$$f_{rms}^2 = \frac{1}{T}\int_0^T f^2(t)dt = \frac{1}{3}\left[\int_0^1 (-4)^2 dt + \int_1^2 0dt + \int_2^3 4^2 dt\right]$$

$$= \frac{1}{3}[16 + 0 + 16] = \frac{32}{3}$$

$$f_{rms} = \sqrt{\frac{32}{3}} = \underline{3.266}$$

f_{rms} = **3.266**

www.konkur.in

Chapter 11, Solution 26.

$$\mathrm{T} = 4, \qquad v(t) = \begin{cases} 5 & 0 < t < 2 \\ 20 & 2 < \mathrm{t} < 4 \end{cases}$$

$$V_{rms}^2 = \frac{1}{4}\left[\int_0^2 10^2\, dt + \int_2^4 (20)^2\, dt\right] = \frac{1}{4}[200 + 800] = 250$$

$$\mathrm{V}_{\mathrm{rms}} = \mathbf{15.811\ V}.$$

www.konkur.in

Chapter 11, Solution 27.

$$T = 5, \qquad i(t) = t, \quad 0 < t < 5$$

$$I_{rms}^2 = \frac{1}{5}\int_0^5 t^2\, dt = \frac{1}{5}\cdot\frac{t^3}{3}\Big|_0^5 = \frac{125}{15} = 8.333$$

$$I_{rms} = \mathbf{2.887\ A}$$

www.konkur.in

Chapter 11, Solution 28.

$$V_{rms}^2 = \frac{1}{5}\left[\int_0^2 (4t)^2\ dt + \int_2^5 0^2\ dt\right]$$

$$V_{rms}^2 = \frac{1}{5}\cdot\frac{16\,t^3}{3}\Big|_0^2 = \frac{16}{15}(8) = 8.533$$

$$V_{rms} = \mathbf{2.92\ V}$$

$$P = \frac{V_{rms}^2}{R} = \frac{8.533}{2} = \mathbf{4.267\ W}$$

www.konkur.in

Chapter 11, Solution 29.

$$T = 20, \qquad i(t) = \begin{cases} 60 - 6t & 5 < t < 15 \\ -120 + 6t & 15 < t < 25 \end{cases}$$

$$I_{eff}^2 = \frac{1}{20}\left[\int_5^{15} (60 - 6t)^2\, dt + \int_{15}^{25} (-120 + 6t)^2\, dt\right]$$

$$I_{eff}^2 = \frac{1}{5}\left[\int_5^{15} (900 - 180t + 9t^2)\, dt + \int_{15}^{25} (9t^2 - 360t + 3600)\, dt\right]$$

$$I_{eff}^2 = \frac{1}{5}\left[\left(900t - 90t^2 + 3t^3\right)\Big|_5^{15} + \left(3t^3 - 180t^2 + 3600t\right)\Big|_{15}^{25}\right]$$

$$I_{eff}^2 = \frac{1}{5}[750 + 750] = 300$$

$$I_{eff} = \mathbf{17.321\ A}$$

$$P = I_{eff}^2 R = (17.321)^2 x12 = \mathbf{3.6\ kW}.$$

www.konkur.in

Chapter 11, Solution 30.

$$v(t) = \begin{cases} t & 0 < t < 2 \\ -1 & 2 < t < 4 \end{cases}$$

$$V_{rms}^2 = \frac{1}{4}\left[\int_0^2 t^2\ dt + \int_2^4 (-1)^2\ dt\right] = \frac{1}{4}\left[\frac{8}{3} + 2\right] = 1.1667$$

$$V_{rms} = \mathbf{1.08\ V}$$

www.konkur.in

Chapter 11, Solution 31.

$$V^2{}_{rms} = \frac{1}{2}\int_0^2 v(t)dt = \frac{1}{2}\left[\int_0^1 (2t)^2\,dt + \int_1^2 (-4)^2\,dt\right] = \frac{1}{2}\left[\frac{4}{3}+16\right] = 8.6667$$

$$\boldsymbol{V_{rms}} = \underline{\mathbf{2.944\ V}}$$

www.konkur.in

Chapter 11, Solution 32.

$$I_{rms}^2 = \frac{1}{2}\left[\int_0^1 (10t^2)^2\ dt + \int_1^2\ 0\ dt\right]$$

$$I_{rms}^2 = 50\int_0^1 t^4\ dt = 50 \cdot \frac{t^5}{5}\Big|_0^1 = 10$$

$$I_{rms} = \mathbf{3.162\ A}$$

www.konkur.in

Chapter 11, Solution 33.

$$I_{rms}^2 = \frac{1}{T}\int_0^T i^2(t)dt = \frac{1}{6}\left[\int_0^1 25t^2 dt + \int_1^3 25dt + \int_3^4 (-5t+20)^2 dt\right]$$

$$I_{rms}^2 = \frac{1}{6}\left[25\frac{t^3}{3}\Big|_0^1 + 25(3-1) + (25\frac{t^3}{3} - 100t^2 + 400t)\Big|_3^4\right] = 11.1056$$

I_{rms} = **3.332 A**

www.konkur.in

Chapter 11, Solution 34.

$$f_{rms}^2 = \frac{1}{T}\int_0^T f^2(t)dt = \frac{1}{3}\left[\int_0^2 (3t)^2\,dt + \int_2^3 6^2\,dt\right]$$

$$= \frac{1}{3}\left[\left.\frac{9t^3}{3}\right|_0^2 + 36\right] = 20$$

$$f_{rms} = \sqrt{20} = 4.472$$

f_{rms} = **4.472**

www.konkur.in

Chapter 11, Solution 35.

$$V_{rms}^2 = \frac{1}{6}\left[\int_0^1 10^2\ dt + \int_1^2 20^2\ dt + \int_2^4 30^2\ dt + \int_4^5 20^2\ dt + \int_5^6 10^2\ dt\right]$$

$$V_{rms}^2 = \frac{1}{6}[100 + 400 + 1800 + 400 + 100] = 466.67$$

$$V_{rms} = \mathbf{21.6\ V}$$

www.konkur.in

Chapter 11, Solution 36.

(a) I_{rms} = <u>10 A</u>

(b) $V^2_{rms} = 4^2 + \left(\frac{3}{\sqrt{2}}\right)^2 \longrightarrow V_{rms} = \sqrt{16 + \frac{9}{2}} = \underline{4.528\text{ V}}$ (checked)

(c) $I_{rms} = \sqrt{64 + \frac{36}{2}} = \underline{9.055\text{ A}}$

(d) $V_{rms} = \sqrt{\frac{25}{2} + \frac{16}{2}} = \underline{4.528\text{ V}}$

www.konkur.in

Chapter 11, Solution 37.

Design a problem to help other students to better understand how to determine the rms value of the sum of multiple currents.

Although there are many ways to work this problem, this is an example based on the same kind of problem asked in the third edition.

Problem

Calculate the rms value of the sum of these three currents:

$i_1 = 8, \quad i_2 = 4\sin(t + 10°), \quad i_3 = 6\cos(2t + 30°)$ A

Solution

$$i = i_1 + i_2 + i_3 = 8 + 4\sin(t + 10^o) + 6\cos(2t + 30^o)$$

$$\boldsymbol{I_{rms} = \sqrt{I^2{}_{1rms} + I^2{}_{2rms} + I^2{}_{3rms}} = \sqrt{64 + \frac{16}{2} + \frac{36}{2}} = \sqrt{90} = \underline{9.487\text{ A}}}$$

www.konkur.in

Chapter 11, Solution 38.

$$S_1 = \frac{V^2}{Z_1^*} = \frac{220^2}{124} = 390.32$$

$$S_2 = \frac{V^2}{Z_2^*} = \frac{220^2}{20 + j25} = 944.4 - j1180.5$$

$$S_3 = \frac{V^2}{Z_3^*} = \frac{220^2}{90 - j80} = 300 + j267.03$$

$$S = S_1 + S_2 + S_3 = 1634.7 - j913.47 = 1872.6 < -29.196^o \text{ VA}$$

(a) P = Re(S) = **1634.7 W**

(b) Q = Im (S) = **913.47 VA (leading)**

(c) pf = cos (29.196^o) = **0.8732**

www.konkur.in

Chapter 11, Solution 39.

(a) $Z_L = 4.2 + j3.6 = 5.5317 \angle 40.6^o$

pf = cos 40.6 = **0.7592**

$$S = \frac{V_{rms}^2}{Z^*} = \frac{220^2}{5.5317\angle -40.6^o} = 6.643 + j5.694 \text{ kVA}$$

P = **6.643 kW**

Q = **5.695 kVAR**

(b) $$C = \frac{P(\tan\theta_1 - \tan\theta_2)}{\omega V_{rms}^2} = \frac{6.643x10^3(\tan 40.6^o - \tan 0^o)}{2\pi x 60 x 220^2} = \underline{312\ \mu\text{F}},$$

{It is important to note that this capacitor will see a peak voltage of 220 $\sqrt{2}$ = 311.08V, this means that the specifications on the capacitor must be at least this or greater!}

www.konkur.in

Chapter 11, Solution 40.

Design a problem to help other students to better understand apparent power and power factor.

Although there are many ways to work this problem, this is an example based on the same kind of problem asked in the third edition.

Problem

A load consisting of induction motors is drawing 80 kW from a 220-V, 60 Hz power line at a pf of 0.72 lagging. Find the capacitance of a capacitor required to raise the pf to 0.92.

Solution

$$pf1 = 0.72 = \cos\theta_1 \longrightarrow \theta_1 = 43.94^0$$
$$pf2 = 0.92 = \cos\theta_2 \longrightarrow \theta_2 = 23.07^0$$

$$C = \frac{P(\tan\theta_1 - \tan\theta_2)}{\omega V_{rms}^2} = \frac{80x10^3(0.9637 - 0.4259)}{2\pi x60x(220)^2} = \underline{2.4\text{ mF}},$$

{Again, we need to note that this capacitor will be exposed to a peak voltage of 311.08V and must be rated to at least this level, preferably higher!}

www.konkur.in

Chapter 11, Solution 41.

(a) $$-j2 \parallel (j5 - j2) = -j2 \parallel -j3 = \frac{(-j2)(-j3)}{j} = -j6$$

$$\mathbf{Z}_T = 4 - j6 = 7.211\angle -56.31°$$

$$\text{pf} = \cos(-56.31°) = \mathbf{0.5547} \quad \textbf{(leading)}$$

(b) $$j2 \parallel (4 + j) = \frac{(j2)(4 + j)}{4 + j3} = 0.64 + j1.52$$

$$\mathbf{Z} = 1 \parallel (0.64 + j1.52 - j) = \frac{0.64 + j0.44}{1.64 + j0.44} = 0.4793\angle 21.5°$$

$$\text{pf} = \cos(21.5°) = \mathbf{0.9304} \quad \textbf{(lagging)}$$

www.konkur.in

Chapter 11, Solution 42.

(a) S=120, $pf = 0.707 = \cos\theta \longrightarrow \theta = 45^o$

$$S = S\cos\theta + jS\sin\theta = \underline{84.84 + j84.84 \text{ VA}}$$

(b) $S = V_{rms} I_{rms} \longrightarrow I_{rms} = \dfrac{S}{V_{rms}} = \dfrac{120}{110} = \underline{1.091 \text{ A rms}}$

(c) $S = I_{rms}^2 Z \longrightarrow Z = \dfrac{S}{I_{rms}^2} = \underline{71.278 + j71.278\ \Omega}$

(d) If Z = R + jϖL, then R = **71.278 Ω**

$$\omega L = 2\pi fL = 71.278 \longrightarrow L = \frac{71.278}{2\pi x 60} = \underline{0.1891 \text{ H}} = \mathbf{189.1\ mH}.$$

www.konkur.in

Chapter 11, Solution 43.

Design a problem to help other students to better understand complex power.

Although there are many ways to work this problem, this is an example based on the same kind of problem asked in the third edition.

Problem

The voltage applied to a 10-ohm resistor is

$$v(t) = 5 + 3\cos(t + 10°) + \cos(2t + 30°)\ \text{V}$$

(a) Calculate the rms value of the voltage.

(b) Determine the average power dissipated in the resistor.

Solution

(a) $$V_{rms} = \sqrt{V^2_{1rms} + V^2_{2rms} + V^2_{3rms}} = \sqrt{25 + \frac{9}{2} + \frac{1}{2}} = \sqrt{30} = \underline{5.477\ \text{V}}$$

(b) $$P = \frac{V^2_{rms}}{R} = 30/10 = \underline{3\ \text{W}}$$

www.konkur.in

Chapter 11, Solution 44.

$$40\mu F \longrightarrow \frac{1}{j\omega C} = \frac{1}{j2000x40x10^{-6}} = -j12.5$$

$$60mH \longrightarrow j\omega L = j2000x60x10^{-3} = j120$$

We apply nodal analysis to the circuit shown below.

$$\frac{100 - V_o}{30 - j12.5} + \frac{4I_x - V_o}{20} = \frac{V_o}{j120}$$

But $I_x = \dfrac{V_o}{j120}$. Solving for V_o leads to

$$V_o = 2.9563 + j1.126$$

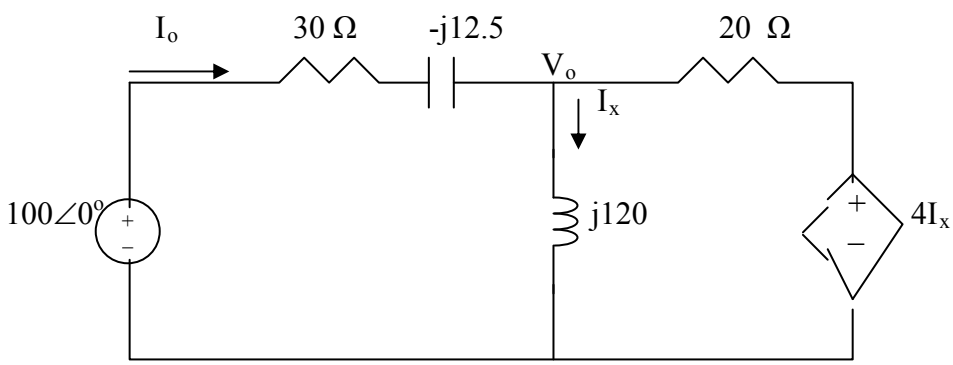

$$I_o = \frac{100 - V_o}{30 - j12.5} = 2.7696 + j1.1165$$

$$S = \frac{1}{2}V_s I_o^* = \frac{1}{2}(100)(2.7696 - j.1165) = \underline{138.48 - j55.825 \text{ VA}}$$

S = (138.48 – j55.82) VA

www.konkur.in

Chapter 11, Solution 45.

(a) $$V^2_{rms} = 20^2 + \frac{60^2}{2} = 2200 \longrightarrow V_{rms} = \underline{46.9\text{ V}}$$

$$I_{rms} = \sqrt{1^2 + \frac{0.5^2}{2}} = \sqrt{1.125} = \underline{1.061A}$$

(b) p(t) = v(t)i(t) = 20 + 60cos100t – 10sin100t – 30(sin100t)(cos100t); clearly the average power = **20W**.

www.konkur.in

Chapter 11, Solution 46.

(a) $\mathbf{S} = \mathbf{V}\,\mathbf{I}^* = (220\angle 30°)(0.5\angle -60°) = 110\angle -30°$

$\mathbf{S} = \mathbf{[95.26 - \mathit{j}55]}\,\mathit{VA}$

Apparent power = **110 VA**
Real power = **95.26 W**
Reactive power = **55 VAR**
pf is **leading** because current leads voltage

(b) $\mathbf{S} = \mathbf{V}\,\mathbf{I}^* = (250\angle -10°)(6.2\angle 25°) = 1550\angle 15°$

$\mathbf{S} = \mathbf{[497.2 + \mathit{j}401.2]}\,\mathit{VA}$

Apparent power = **1550 VA**
Real power = **1497.2 W**
Reactive power = **401.2 VAR**
pf is **lagging** because current lags voltage

(c) $\mathbf{S} = \mathbf{V}\,\mathbf{I}^* = (120\angle 0°)(2.4\angle 15°) = 288\angle 15°$

$\mathbf{S} = \mathbf{[278.2 + \mathit{j}74.54]}\,\mathit{VA}$

Apparent power = **288 VA**
Real power = **278.2 W**
Reactive power = **74.54 VAR**
pf is **lagging** because current lags voltage

(d) $\mathbf{S} = \mathbf{V}\,\mathbf{I}^* = (160\angle 45°)(8.5\angle -90°) = 1360\angle -45°$

$\mathbf{S} = \mathbf{[961.7 - j961.7]}$ **VA**

Apparent power = **1360 VA**
Real power = **961.7 W**
Reactive power = **- 961.7 VAR**
pf is **leading** because current leads voltage

www.konkur.in

Chapter 11, Solution 47.

(a) $\mathbf{V} = 112\angle 10°$, $\mathbf{I} = 4\angle -50°$

$$\mathbf{S} = \frac{1}{2}\mathbf{V}\,\mathbf{I}^* = 224\angle 60° = \mathbf{[112 + \mathit{j}194]}\,\mathit{VA}$$

Average power = **112 W**

Reactive power = **194 VAR**

(b) $\mathbf{V} = 160\angle 0°$, $\mathbf{I} = 4\angle 45°$

$$\mathbf{S} = \frac{1}{2}\mathbf{V}\,\mathbf{I}^* = 320\angle -45° = \mathbf{226.3 - j226.3}$$

Average power = **226.3 W**

Reactive power = **–226.3 VAR**

(c) $$\mathbf{S} = \frac{|\mathbf{V}|^2}{\mathbf{Z}^*} = \frac{(80)^2}{50\angle -30°} = 128\angle 30° = \mathbf{110.85 + j64}$$

Average power = **110.85 W**

Reactive power = **64 VAR**

(d) $$\mathbf{S} = |\mathbf{I}|^2\,\mathbf{Z} = (100)(100\angle 45°) = \mathbf{[7.071 + \mathit{j}7.071]}\,\mathit{kVA}$$

Average power = **7.071 kW**

Reactive power = **7.071 kVAR**

www.konkur.in

Chapter 11, Solution 48.

(a) $\mathbf{S} = P - jQ = \mathbf{[269 - j150]}\ \boldsymbol{VA}$

(b) $pf = \cos\theta = 0.9 \longrightarrow \theta = 25.84°$

$$Q = S\sin\theta \longrightarrow S = \frac{Q}{\sin\theta} = \frac{2000}{\sin(25.84°)} = 4588.31$$

$$P = S\cos\theta = 4129.48$$

$\mathbf{S} = \mathbf{[4.129 - j2]}\ \boldsymbol{kVA}$

(c) $Q = S\sin\theta \longrightarrow \sin\theta = \dfrac{Q}{S} = \dfrac{450}{600} = 0.75$

$\theta = 48.59$, $pf = 0.6614$

$$P = S\cos\theta = (600)(0.6614) = 396.86$$

$\mathbf{S} = \mathbf{[396.9 + j450]}\ \boldsymbol{VA}$

(d) $S = \dfrac{|\mathbf{V}|^2}{|\mathbf{Z}|} = \dfrac{(220)^2}{40} = 1210$

$P = S\cos\theta \longrightarrow \cos\theta = \dfrac{P}{S} = \dfrac{1000}{1210} = 0.8264$

$\theta = 34.26°$

$$Q = S\sin\theta = 681.25$$

$\mathbf{S} = \mathbf{[1 + j0.6812]}\ \boldsymbol{kVA}$

www.konkur.in

Chapter 11, Solution 49.

(a) $\mathbf{S} = 4 + j\dfrac{4}{0.86}\sin(\cos^{-1}(0.86))$ kVA

$\mathbf{S} = \mathbf{[4 + \boldsymbol{j}2.373]}\ \boldsymbol{kVA}$

(b) $\text{pf} = \dfrac{P}{S} = \dfrac{1.6}{2} 0.8 = \cos\theta \longrightarrow \sin\theta = 0.6$

$\mathbf{S} = 1.6 - j2\sin\theta = \mathbf{[1.6 - \boldsymbol{j}1.2]}\ \boldsymbol{kVA}$

(c) $\mathbf{S} = \mathbf{V}_{rms}\,\mathbf{I}^*_{rms} = (208\angle 20°)(6.5\angle 50°)$ VA

$\mathbf{S} = 1.352\angle 70° = \mathbf{[0.4624 + \boldsymbol{j}1.2705]}\ \boldsymbol{kVA}$

(d) $\mathbf{S} = \dfrac{|\mathbf{V}|^2}{\mathbf{Z}^*} = \dfrac{(120)^2}{40 - j60} = \dfrac{14400}{72.11\angle -56.31°}$

$\mathbf{S} = 199.7\angle 56.31° = \mathbf{[110.77 + \boldsymbol{j}166.16]}\ \boldsymbol{VA}$

www.konkur.in

Chapter 11, Solution 50.

(a) $\mathbf{S} = P - jQ = 1000 - j\dfrac{1000}{0.8}\sin(\cos^{-1}(0.8))$

$\mathbf{S} = 1000 - j750$

But, $\mathbf{S} = \dfrac{|\mathbf{V}_{rms}|^2}{\mathbf{Z}^*}$

$\mathbf{Z}^* = \dfrac{|\mathbf{V}_{rms}|^2}{\mathbf{S}} = \dfrac{(220)^2}{1000 - j750} = 30.98 + j23.23$

$\mathbf{Z} = \mathbf{[30.98 - \mathit{j}23.23]\ \Omega}$

(b) $\mathbf{S} = |\mathbf{I}_{rms}|^2\mathbf{Z}$

$\mathbf{Z} = \dfrac{\mathbf{S}}{|\mathbf{I}_{rms}|^2} = \dfrac{1500 + j2000}{(12)^2} = \mathbf{[10.42 + \mathit{j}13.89]\ \Omega}$

(c) $\mathbf{Z}^* = \dfrac{|\mathbf{V}_{rms}|^2}{\mathbf{S}} = \dfrac{|\mathbf{V}|^2}{2\mathbf{S}} = \dfrac{(120)^2}{(2)(4500\angle 60°)} = 1.6\angle -60°$

$\mathbf{Z} = 1.6\angle 60° = \mathbf{[0.8 + \mathit{j}1.386]\ \Omega}$

www.konkur.in

Chapter 11, Solution 51.

(a) $\mathbf{Z}_T = 2 + (10 - j5) \,||\, (8 + j6)$

$$\mathbf{Z}_T = 2 + \frac{(10 - j5)(8 + j6)}{18 + j} = 2 + \frac{110 + j20}{18 + j}$$

$$\mathbf{Z}_T = 8.152 + j0.768 = 8.188\angle 5.382°$$

$$\text{pf} = \cos(5.382°) = \mathbf{0.9956} \quad \textbf{(lagging)}$$

(b) $$\mathbf{S} = \mathbf{V}\,\mathbf{I}^* = \frac{|\mathbf{V}|^2}{\mathbf{Z}^*} = \frac{(16)^2}{(8.188\angle -5.382°)}$$

$$\mathbf{S} = 31.26\angle 5.382°$$

$$P = S\cos\theta = \mathbf{31.12\ W}$$

(c) $Q = S\sin\theta = \mathbf{2.932\ VAR}$

(d) $S = |\mathbf{S}| = \mathbf{31.26\ VA}$

(e) $\mathbf{S} = 31.26\angle 5.382° =$ **(31.12+j2.932) VA**

(a) 0.9956 (lagging, (b) 31.12 W, (c) 2.932 VAR, (d) 31.26 VA, (e) [31.12+j2.932] VA

www.konkur.in

Chapter 11, Solution 52.

$$S_A = 2000 + j\frac{2000}{0.8}0.6 = 2000 + j1500$$
$$S_B = 3000x0.4 - j3000x0.9165 = 1200 - j2749$$
$$S_C = 1000 + j500$$
$$S = S_A + S_B + S_C = 4200 - j749$$

(a) $$pf = \frac{4200}{\sqrt{4200^2 + 749^2}} = \mathbf{0.9845\ leading}$$

(b) $$S = V_{rms}I^*_{rms} \longrightarrow I^*_{rms} = \frac{4200 - j749}{120\angle 45°} = 35.55\angle -55.11°$$

I_{rms} = **35.55∠55.11˚ A**.

www.konkur.in

Chapter 11, Solution 53.

$$S = S_A + S_B + S_C = 4000(0.8–j0.6) + 2400(0.6+j0.8) + 1000 + j500$$

$$= 5640 + j20 = 5640\angle 0.2^\circ$$

(a)
$$\boldsymbol{I^*_{rms} = \frac{S_B}{V_{rms}} + \frac{S_A + S_C}{V_{rms}} = \frac{S}{V_{rms}} = \frac{5640\angle 0.2^\circ}{120\angle 30^\circ} = 47\angle -29.8^\circ}$$

$$\boldsymbol{I = 47\angle 29.8^\circ = \underline{47\angle 29.8^\circ\ A}}$$

(b) pf = cos(0.2˚) **≈ <u>1.0 lagging</u>**.

www.konkur.in

Chapter 11, Solution 54.

Consider the circuit shown below.

$$\mathbf{I}_1 = \frac{8\angle -20°}{4 - j3} = 1.6\angle 16.87°$$
$$\mathbf{I}_2 = \frac{8\angle -20°}{j5} = 1.6\angle -110°$$

$$\mathbf{I} = \mathbf{I}_1 + \mathbf{I}_2 = (-0.5472 - j1.504) + (1.531 + j0.4643)$$
$$\mathbf{I} = 0.9839 - j1.04 = 1.432\angle -46.58°$$

For the source,

$$\mathbf{S} = \mathbf{V}\,\mathbf{I}^* = (8\angle -20°)(1.432\angle 46.58°)$$
$$\mathbf{S} = 11.456\angle 26.58° = \mathbf{(10.24+j3.12)\ VA}$$

For the capacitor,

$$\mathbf{S} = |\mathbf{I}_1|^2\,\mathbf{Z}_c = (1.6)^2(-j3) = \mathbf{-j7.68\ VA}$$

For the resistor,

$$\mathbf{S} = |\mathbf{I}_1|^2\,\mathbf{Z}_R = (1.6)^2(4) = \mathbf{10.24\ VA}$$

For the inductor,

$$\mathbf{S} = |\mathbf{I}_2|^2\,\mathbf{Z}_L = (1.6)^2(j5) = \mathbf{j12.8\ VA}$$

www.konkur.in

Chapter 11, Solution 55.

Using Fig. 11.74, design a problem to help other students to better understand the conservation of AC power.

Although there are many ways to work this problem, this is an example based on the same kind of problem asked in the third edition.

Problem

Find the complex power absorbed by each of the five elements in the circuit of Fig. 11.74.

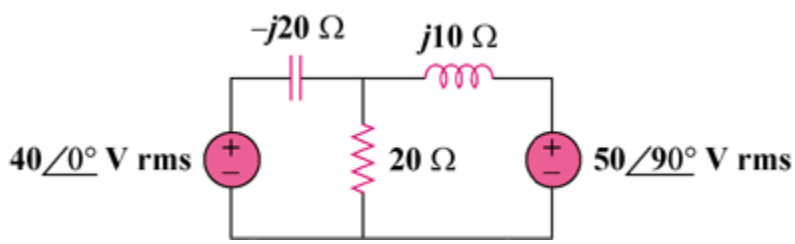

Figure 11.74

Solution

We apply mesh analysis to the following circuit.

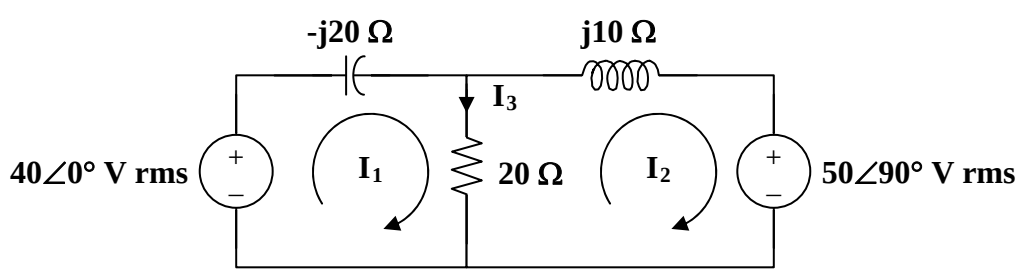

For mesh 1,

$$40 = (20 - j20)I_1 - 20I_2$$

$$2 = (1 - j)I_1 - I_2 \qquad (1)$$

For mesh 2,

$$-j50 = (20 + j10)I_2 - 20I_1$$

$$-j5 = -2I_1 + (2 + j)I_2 \qquad (2)$$

Putting (1) and (2) in matrix form,

$$\begin{bmatrix} 2 \\ -j5 \end{bmatrix} = \begin{bmatrix} 1-j & -1 \\ -2 & 2+j \end{bmatrix} \begin{bmatrix} I_1 \\ I_2 \end{bmatrix}$$

www.konkur.in

$$\Delta = 1 - j, \qquad \Delta_1 = 4 - j3, \qquad \Delta_2 = -1 - j5$$

$$I_1 = \frac{\Delta_1}{\Delta} = \frac{4 - j3}{1 - j} = \frac{1}{2}(7 + j) = 3.535\angle 8.13°$$

$$I_2 = \frac{\Delta_2}{\Delta} = \frac{-1 - j5}{1 - j} = 2 - j3 = 3.605\angle -56.31°$$

$$I_3 = I_1 - I_2 = (3.5 + j0.5) - (2 - j3) = 1.5 + j3.5 = 3.808\angle 66.8°$$

For the 40-V source,

$$\mathbf{S} = -\mathbf{V}\,\mathbf{I}_1^* = -(40)\left(\frac{1}{2}\cdot(7 - j)\right) = \mathbf{[-140 + j20]\ VA}$$

For the capacitor,

$$\mathbf{S} = \left|\mathbf{I}_1\right|^2 \mathbf{Z}_c = \mathbf{-\ j250\ VA}$$

For the resistor,

$$\mathbf{S} = \left|\mathbf{I}_3\right|^2 R = \mathbf{290\ VA}$$

For the inductor,

$$\mathbf{S} = \left|\mathbf{I}_2\right|^2 \mathbf{Z}_L = \mathbf{j130\ VA}$$

For the j50-V source,

$$\mathbf{S} = \mathbf{V}\,\mathbf{I}_2^* = (j50)(2 + j3) = \mathbf{[-150 + j100]\ VA}$$

www.konkur.in

Chapter 11, Solution 56.

$$-j2 \,||\, 6 = \frac{(6)(-j2)}{6-j2} = \frac{12\angle -90°}{6.32456\angle -18.435°} = 1.897365\angle -71.565° = 0.6 - j1.8$$
$$3 + j4 + [(-j2) \,||\, 6] = 3.6 + j2.2$$

The circuit is reduced to that shown below.

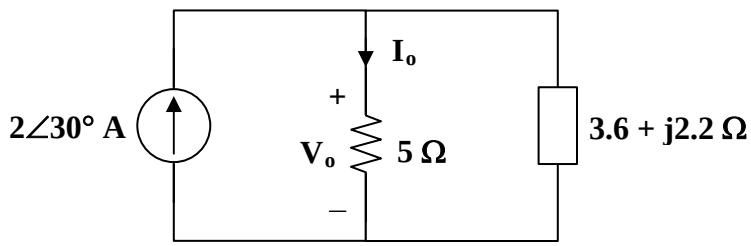

$$\mathbf{I}_o = \frac{3.6 + j2.2}{8.6 + j2.2}(2\angle 30°) = \frac{4.219\angle 31.4296°}{8.87694\angle 14.3493°}(2\angle 30°) = 0.95055\angle 47.08°$$

$$\mathbf{V}_o = 5\mathbf{I}_o = 4.75275\angle 47.08°$$

$$\mathbf{S} = \mathbf{V}_o \mathbf{I}_s^* = (4.75275\angle 47.08°)(2\angle -30°)$$
$$\mathbf{S} = 9.5055\angle 17.08° = \mathbf{(9.086+j2.792)\ VA}$$

www.konkur.in

Chapter 11, Solution 57.

Consider the circuit as shown below.

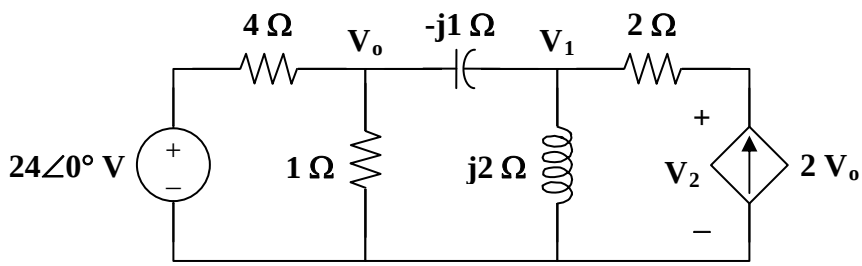

At node o,

$$\frac{24-\mathbf{V}_o}{4}=\frac{\mathbf{V}_o}{1}+\frac{\mathbf{V}_o-\mathbf{V}_1}{-j}$$

$$24=(5+j4)\mathbf{V}_o-j4\mathbf{V}_1 \qquad (1)$$

At node 1,

$$\frac{\mathbf{V}_o-\mathbf{V}_1}{-j}+2\mathbf{V}_o=\frac{\mathbf{V}_1}{j2}$$

$$\mathbf{V}_1=(2-j4)\mathbf{V}_o \qquad (2)$$

Substituting (2) into (1),

$$24=(5+j4-j8-16)\mathbf{V}_o$$

$$\mathbf{V}_o=\frac{-24}{11+j4}, \qquad \mathbf{V}_1=\frac{(-24)(2-j4)}{11+j4}$$

The voltage across the dependent source is

$$\mathbf{V}_2=\mathbf{V}_1+(2)(2\mathbf{V}_o)=\mathbf{V}_1+4\mathbf{V}_o$$

$$\mathbf{V}_2=\frac{-24}{11+j4}\cdot(2-j4+4)=\frac{(-24)(6-j4)}{11+j4}$$

$$\mathbf{S}=\mathbf{V}_2\mathbf{I}^*=\mathbf{V}_2(2\mathbf{V}_o^*)$$

$$\mathbf{S}=\frac{(-24)(6-j4)}{11+j4}\cdot\frac{-48}{11-j4}=\left(\frac{1152}{137}\right)(6-j4)$$

$$\mathbf{S}=\mathbf{(50.45–j33.64)\ VA}$$

www.konkur.in

Chapter 11, Solution 58.

From the left portion of the circuit,

$$\mathbf{I}_o = \frac{0.2}{500} = 0.4 \text{ mA}$$

$20\mathbf{I}_o = 8$ mA which then leads to the following circuit,

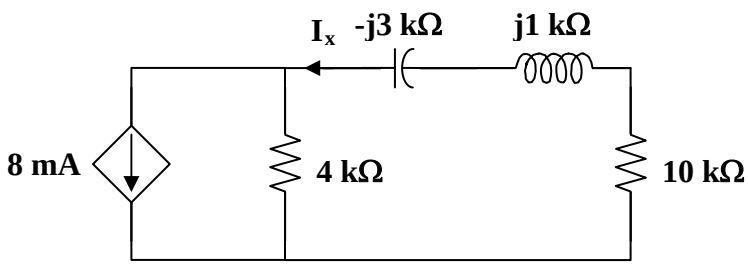

From the right portion of the circuit,

$$\mathbf{I}_x = \frac{4}{4+10+j-j3}(8 \text{ mA}) = \frac{16}{7-j} \text{ mA}$$

$$\mathbf{S} = |\mathbf{I}_x|^2 R = \frac{(16\times10^{-3})^2}{50}\cdot(10\times10^3)$$

$$\mathbf{S} = \mathbf{51.2\ mVA}$$

It should be noted that the complex power delivered to a resistor is always watts.

www.konkur.in

Chapter 11, Solution 59.

Let $\mathbf{V}_o$ represent the voltage across the current source and then apply nodal analysis to the circuit and we get:

$$4 + \frac{240 - \mathbf{V}_o}{50} = \frac{\mathbf{V}_o}{-j20} + \frac{\mathbf{V}_o}{40 + j30}$$

$$88 = (0.36 + j0.38)\,\mathbf{V}_o$$

$$\mathbf{V}_o = \frac{88}{0.36 + j0.38} = 168.13\angle -46.55°$$

$$\mathbf{I}_1 = \frac{\mathbf{V}_o}{-j20} = 8.41\angle 43.45°$$

$$\mathbf{I}_2 = \frac{\mathbf{V}_o}{40 + j30} = 3.363\angle -83.42°$$

Reactive power in the inductor is

$$\mathbf{S} = |\mathbf{I}_2|^2\,\mathbf{Z}_L = (3.363)^2(j30) = \mathbf{j339.3\ VAR}$$

Reactive power in the capacitor is

$$\mathbf{S} = |\mathbf{I}_1|^2\,\mathbf{Z}_c = (8.41)^2(-j20) = \mathbf{-j1.4146\ kVAR}$$

www.konkur.in

Chapter 11, Solution 60.

$$S_1 = 20 + j\frac{20}{0.8}\sin(\cos^{-1}(0.8)) = 20 + j15$$

$$S_2 = 16 + j\frac{16}{0.9}\sin(\cos^{-1}(0.9)) = 16 + j7.749$$

$$S = S_1 + S_2 = 36 + j22.749 = 42.585\angle 32.29°$$

But $\quad S = V_o I^* = 6V_o$

$$V_o = \frac{S}{6} = \mathbf{7.098\angle 32.29°}$$

$$\text{pf} = \cos(32.29°) = \mathbf{0.8454} \quad \textbf{(lagging)}$$

Chapter 11, Solution 61.

Consider the network shown below.

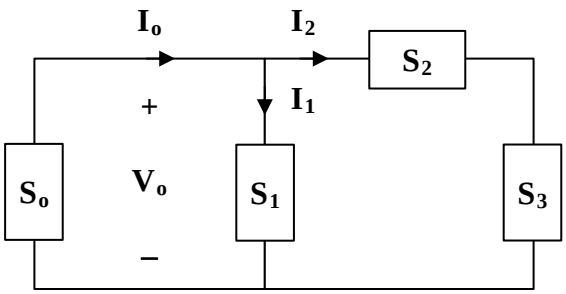

$$\mathbf{S}_2 = 1.2 - \text{j}0.8 \text{ kVA}$$

$$\mathbf{S}_3 = 4 + \text{j}\frac{4}{0.9}\sin(\cos^{-1}(0.9)) = 4 + \text{j}1.937 \text{ kVA}$$

Let $\mathbf{S}_4 = \mathbf{S}_2 + \mathbf{S}_3 = 5.2 + \text{j}1.137 \text{ kVA}$

But $\mathbf{S}_4 = \mathbf{V}_o \mathbf{I}_2^*$

$$\mathbf{I}_2^* = \frac{\mathbf{S}_4}{\mathbf{V}_o} = \frac{(5.2 + j1.137)\times 10^3}{100\angle 90°} = 11.37 - j52$$

$$\mathbf{I}_2 = 11.37 + j52$$

Similarly, $\mathbf{S}_1 = \sqrt{2} - \text{j}\frac{\sqrt{2}}{0.707}\sin(\cos^{-1}(0.707)) = \sqrt{2}(1 - \text{j}) \text{ kVA}$

But $\mathbf{S}_1 = \mathbf{V}_o \mathbf{I}_1^*$

$$\mathbf{I}_1^* = \frac{\mathbf{S}_1}{V_o} = \frac{(1.4142 - j1.4142)\times 10^3}{j100} = -14.142 - j14.142$$

$$\mathbf{I}_1 = -14.142 + \text{j}14.142$$

$$\mathbf{I}_o = \mathbf{I}_1 + \mathbf{I}_2 = -2.772 + \text{j}66.14 = \mathbf{66.2\angle 92.4° \text{ A}}$$

$$\mathbf{S}_o = V_o I_o^*$$

$$\mathbf{S}_o = (100\angle 90°)(66.2\angle -92.4°)\, VA$$

$$\mathbf{S}_o = \mathbf{6.62\angle –2.4° \text{ kVA}}$$

66.2∠92.4° A, 6.62∠–2.4° kVA

www.konkur.in

Chapter 11, Solution 62.

Consider the circuit below.

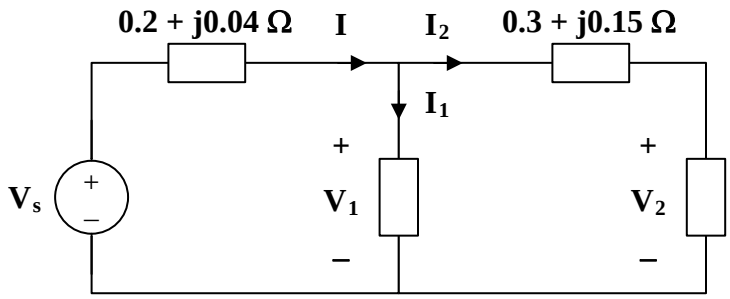

$$\mathbf{S}_2 = 15 - j\frac{15}{0.8}\sin(\cos^{-1}(0.8)) = 15 - j11.25$$

But $\mathbf{S}_2 = \mathbf{V}_2\,\mathbf{I}_2^*$

$$\mathbf{I}_2^* = \frac{\mathbf{S}_2}{\mathbf{V}_2} = \frac{15 - j11.25}{120}$$

$$\mathbf{I}_2 = 0.125 + j0.09375$$

$$\mathbf{V}_1 = \mathbf{V}_2 + \mathbf{I}_2\,(0.3 + j0.15)$$

$$\mathbf{V}_1 = 120 + (0.125 + j0.09375)(0.3 + j0.15)$$

$$\mathbf{V}_1 = 120.02 + j0.0469$$

$$\mathbf{S}_1 = 10 + j\frac{10}{0.9}\sin(\cos^{-1}(0.9)) = 10 + j4.843$$

But $\mathbf{S}_1 = \mathbf{V}_1\,\mathbf{I}_1^*$

$$\mathbf{I}_1^* = \frac{\mathbf{S}_1}{\mathbf{V}_1} = \frac{11.111\angle 25.84°}{120.02\angle 0.02°}$$

$$\mathbf{I}_1 = 0.093\angle -25.82° = 0.0837 - j0.0405$$

$$\mathbf{I} = \mathbf{I}_1 + \mathbf{I}_2 = 0.2087 + j0.053$$

$$\mathbf{V}_s = \mathbf{V}_1 + \mathbf{I}\,(0.2 + j0.04)$$

$$\mathbf{V}_s = (120.02 + j0.0469) + (0.2087 + j0.053)(0.2 + j0.04)$$

$$\mathbf{V}_s = 120.06 + j0.0658$$

$$\mathbf{V}_s = \mathbf{120.06\angle 0.03°\ V}$$

www.konkur.in

Chapter 11, Solution 63.

Let $\mathbf{S} = \mathbf{S}_1 + \mathbf{S}_2 + \mathbf{S}_3$.

$$\mathbf{S}_1 = 12 - \mathrm{j}\frac{12}{0.866}\sin(\cos^{-1}(0.866)) = 12 - \mathrm{j}6.929$$

$$\mathbf{S}_2 = 16 + \mathrm{j}\frac{16}{0.85}\sin(\cos^{-1}(0.85)) = 16 + \mathrm{j}9.916$$

$$\mathbf{S}_3 = \frac{(20)(0.6)}{\sin(\cos^{-1}(0.6))} + j20 = 15 + j20$$

$$\mathbf{S} = 43 + j22.987 = \mathbf{V}\,\mathbf{I}_o^*$$

$$\mathbf{I}_o^* = \frac{\mathbf{S}}{\mathbf{V}} = \frac{(43 + j22.99)x10^3}{220} = 195.45 + j104.5 = 221.6\angle 28.13°$$

$$\mathbf{I}_o = \mathbf{221.6\angle -28.13^\circ\ A}$$

www.konkur.in

Chapter 11, Solution 64.

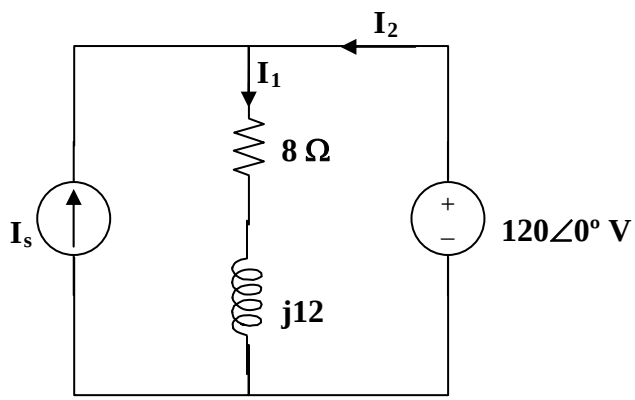

$I_s + I_2 = I_1$ or $I_s = I_1 - I_2$

$$I_1 = \frac{120}{8 + j12} = 4.615 - j6.923$$

But, $$S = VI_2^* \longrightarrow I_2^* = \frac{S}{V} = \frac{2500 - j400}{120} = 20.83 - j3.333$$

$$\text{or } I_2 = 20.83 + j3.333$$

$I_s = I_1 - I_2 = -16.22 - j10.256 =$ **19.19∠–147.69˚ A**.

www.konkur.in

Chapter 11, Solution 65.

$$C = 1\text{ nF} \longrightarrow \frac{1}{j\omega C} = \frac{-j}{10^4 \times 10^{-9}} = -j100\text{ k}\Omega$$

At the noninverting terminal,

$$\frac{4\angle 0° - \mathbf{V}_o}{100} = \frac{\mathbf{V}_o}{-j100} \longrightarrow \mathbf{V}_o = \frac{4}{1+j}$$

$$\mathbf{V}_o = \frac{4}{\sqrt{2}}\angle -45°$$

$$v_o(t) = \frac{4}{\sqrt{2}}\cos(10^4 t - 45°)$$

$$P = \frac{V_{rms}^2}{R} = \left(\frac{4}{\sqrt{2}} \cdot \frac{1}{\sqrt{2}}\right)^2 \left(\frac{1}{50 \times 10^3}\right) \text{W}$$

$$P = \mathbf{80\ \mu W}$$

www.konkur.in

Chapter 11, Solution 66.

As an inverter,

$$\mathbf{V}_o = \frac{-\mathbf{Z}_f}{\mathbf{Z}_i}\mathbf{V}_s = \frac{-(2+j4)}{4+j3}\cdot(4\angle 45°)$$

$$\mathbf{I}_o = \frac{\mathbf{V}_o}{6-j2}\text{ mA} = \frac{-(2+j4)(4\angle 45°)}{(6-j2)(4+j3)}\text{ mA}$$

The power absorbed by the 6-kΩ resistor is

$$P = |\mathbf{I}_o|^2 R = \left(\frac{\sqrt{20}\times 4}{\sqrt{40}\times 5}\right)^2 \times 10^{-6}\times 6\times 10^3$$

P = **1.92 mW**

www.konkur.in

Chapter 11, Solution 67.

$$\omega = 2, \quad 3\text{H} \longrightarrow j\omega L = j6, \quad 0.1\text{F} \longrightarrow \frac{1}{j\omega C} = \frac{1}{j2x0.1} = -j5$$

$$10//(-j5) = \frac{-j50}{10-j5} = 2 - j4$$

The frequency-domain version of the circuit is shown below.

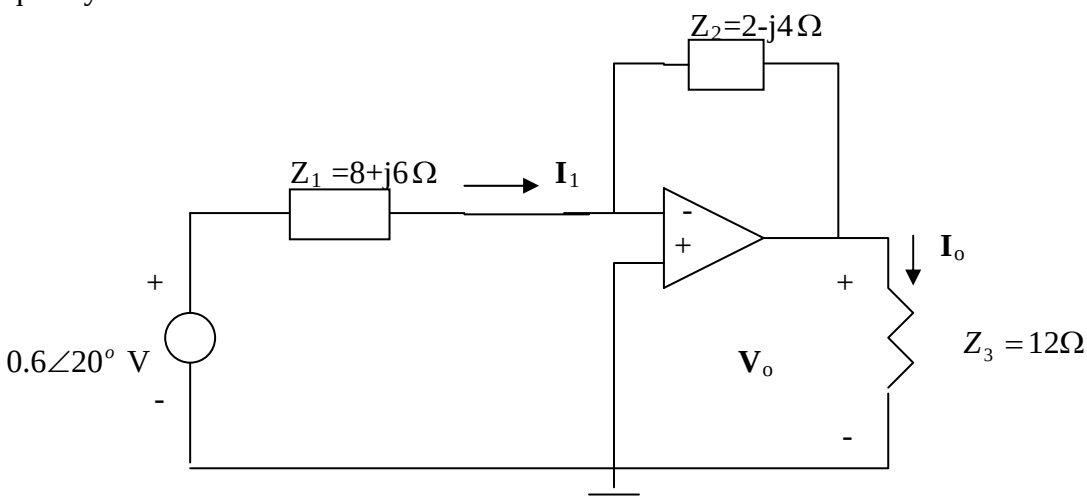

(a) $I_1 = \dfrac{0.6\angle 20^o - 0}{8 + j6} = \dfrac{0.5638 + j0.2052}{8 + j6} = 0.06\angle -16.87^o$

$$S = \frac{1}{2} V_s I^*_1 = (0.3\angle 20^o)(0.06\angle +16.87^o) = \underline{14.4 + j10.8 \text{ mVA}} = \underline{18\angle 36.86^o \text{ mVA}}$$

S = (14.4+j10.8) mVA = 18∠36.86° mVA

(b) $V_o = -\dfrac{Z_2}{Z_1} V_s, \qquad I_o = \dfrac{V_o}{Z_3} = -\dfrac{(2-j4)}{12(8+j6)}(0.6\angle 20^o) = 0.0224\angle 99.7^o$

$$P = \frac{1}{2} |I_o|^2 \; R = 0.5(0.0224)^2 (12) = \underline{2.904 \text{ mW}}$$

P = 2.904 mW

(a) 18∠36.86° mVA, (b) 2.904 mW

www.konkur.in

Chapter 11, Solution 68.

Let $\mathbf{S} = \mathbf{S}_R + \mathbf{S}_L + \mathbf{S}_c$

where $\mathbf{S}_R = P_R + jQ_R = \frac{1}{2} I_o^2 R + j0$

$\mathbf{S}_L = P_L + jQ_L = 0 + j\frac{1}{2} I_o^2 \omega L$

$\mathbf{S}_c = P_c + jQ_c = 0 - j\frac{1}{2} I_o^2 \cdot \frac{1}{\omega C}$

Hence,

$$\mathbf{S} = \frac{1}{2} \mathbf{I}_o^2 \left[\mathbf{R} + \mathbf{j}\left(\omega \mathbf{L} - \frac{1}{\omega \mathbf{C}} \right) \right]$$

www.konkur.in

Chapter 11, Solution 69.

(a) Given that $\mathbf{Z} = 10 + j12$

$$\tan\theta = \frac{12}{10} \longrightarrow \theta = 50.19°$$

$$\text{pf} = \cos\theta = \mathbf{0.6402}$$

(b) $$\mathbf{S} = \frac{|\mathbf{V}|^2}{2\mathbf{Z}^*} = \frac{(120)^2}{(2)(10 - j12)} = 295.12 + j354.09$$

The average power absorbed $= P = \text{Re}(\mathbf{S}) = \mathbf{295.1\ W}$

(c) For unity power factor, $\theta_1 = 0°$, which implies that the reactive power due to the capacitor is $Q_c = 354.09$

But $$Q_c = \frac{V^2}{2X_c} = \frac{1}{2}\omega C V^2$$

$$C = \frac{2Q_c}{\omega V^2} = \frac{(2)(354.09)}{(2\pi)(60)(120)^2} = \mathbf{130.4\ \mu F}$$

www.konkur.in

Chapter 11, Solution 70.

Design a problem to help other students to better understand power factor correction.

Although there are many ways to work this problem, this is an example based on the same kind of problem asked in the third edition.

Problem

An 880-VA, 220-V, 50-Hz load has a power factor of 0.8 lagging. What value of parallel capacitance will correct the load power factor to unity?

Solution

$$\text{pf} = \cos\theta = 0.8 \longrightarrow \sin\theta = 0.6$$
$$Q = S\sin\theta = (880)(0.6) = 528$$

If the power factor is to be unity, the reactive power due to the capacitor is

$$Q_c = Q = 528 \text{ VAR}$$

$$\text{But} \quad Q = \frac{V_{rms}^2}{X_c} = \omega C V^2 \longrightarrow C = \frac{Q_c}{\omega V^2}$$

$$C = \frac{(528)}{(2\pi)(50)(220)^2} = \mathbf{34.72\ \mu F}$$

www.konkur.in

Chapter 11, Solution 71.

(a) For load 1,

Q_1 = 60 kVAR, pf = 0.85 or $\theta_1 = 31.79^\circ$

$Q_1 = S_1 \sin\theta_1$ = 60k or S_1 = 113.89k and P_1 = 113.89cos(31.79) = 96.8kW

$\mathbf{S}_1$ = 96.8 + j60 kVA

For load 2, $\mathbf{S}_2$ = 90 – j50 kVA

For load 3, $\mathbf{S}_3$ =100 kVA

Hence,

$\mathbf{S} = \mathbf{S_1} + \mathbf{S_2} + \mathbf{S_3} =$ 286.8 + j10kVA = $287\angle 2^\circ$kVA

But $\mathbf{S} = (V_{rms})^2/Z^*$ or $Z^* = 120^2/287\angle 2^\circ k = 0.05017\angle -2^\circ$

Thus, $Z = \mathbf{0.05017\angle 2^\circ \Omega}$ or **[50.14 + j1.7509] mΩ**.

(b) From above, pf = cos2° = **0.9994**.

(c) $I_{rms} = V_{rms}/Z = 120/0.05017\angle 2^\circ =$ **2.392∠–2° kA** or **[2.391 – j0.08348] kA**.

www.konkur.in

Chapter 11, Solution 72.

(a) $P = S\cos\theta_1 \quad \longrightarrow \quad S = \dfrac{P}{\cos\theta_1} = \dfrac{2.4}{0.8} = 3.0 \text{ kVA}$

$pf = 0.8 = \cos\theta_1 \quad \longrightarrow \quad \theta_1 = 36.87^o$

$Q = S\sin\theta_1 = 3.0\sin 36.87^o = 1.8 \text{ kVAR}$

Hence, S = 2.4 + j1.8 kVA

$S_1 = \dfrac{P_1}{\cos\theta} = \dfrac{1.5}{0.707} = 2.122 \text{ kVA}$

$pf = 0.707 = \cos\theta \quad \longrightarrow \quad \theta = 45^o$

$Q_1 = P_1 = 1.5 \text{ kVAR} \quad \longrightarrow \quad S_1 = 1.5 + j1.5 \text{ kVA}$

Since, $S = S_1 + S_2 \quad \longrightarrow \quad S_2 = S - S_1 = (2.4 + j1.8) - (1.5 + j1.5) = 0.9 + j0.3 \text{ kVA}$

$S_2 = 0.9497 < 18.43^o$

pf = cos 18.43^o = <u>0.9487</u>

(b) $pf = 0.9 = \cos\theta_2 \quad \longrightarrow \quad \theta_2 = 25.84^o$

$C = \dfrac{P(\tan\theta_1 - \tan\theta_2)}{\omega V_{rms}^2} = \dfrac{2400(\tan 36.87 - \tan 25.84)}{2\pi x 60 x (120)^2} = \underline{117.5\ \mu\text{F}}$

www.konkur.in

Chapter 11, Solution 73.

(a) $\mathbf{S} = 10 - j15 + j22 = 10 + j7 \text{ kVA}$

$S = |\mathbf{S}| = \sqrt{10^2 + 7^2} = \mathbf{12.21\ kVA}$

(b) $\mathbf{S} = \mathbf{V}\,\mathbf{I}^* \longrightarrow \mathbf{I}^* = \dfrac{\mathbf{S}}{\mathbf{V}} = \dfrac{10{,}000 + j7{,}000}{240}$

$\mathbf{I} = 41.667 - j29.167 = \mathbf{50.86\angle -35°\ A}$

(c) $\theta_1 = \tan^{-1}\left(\dfrac{7}{10}\right) = 35°, \qquad \theta_2 = \cos^{-1}(0.96) = 16.26°$

$Q_c = P_1[\tan\theta_1 - \tan\theta_2] = 10[\tan(35°) - \tan(16.26°)]$

$Q_c = \mathbf{4.083\ kVAR}$

$C = \dfrac{Q_c}{\omega V_{rms}^2} = \dfrac{4083}{(2\pi)(60)(240)^2} = \mathbf{188.03\ \mu F}$

(d) $\mathbf{S}_2 = P_2 + jQ_2, \qquad P_2 = P_1 = 10 \text{ kW}$

$Q_2 = Q_1 - Q_c = 7 - 4.083 = 2.917 \text{ kVAR}$

$\mathbf{S}_2 = 10 + j2.917 \text{ kVA}$

But $\mathbf{S}_2 = \mathbf{V}\,\mathbf{I}_2^*$

$\mathbf{I}_2^* = \dfrac{\mathbf{S}_2}{\mathbf{V}} = \dfrac{10{,}000 + j2917}{240}$

$\mathbf{I}_2 = 41.667 - j12.154 = \mathbf{43.4\angle -16.26°\ A}$

www.konkur.in

Chapter 11, Solution 74.

(a) $\theta_1 = \cos^{-1}(0.8) = 36.87°$

$$S_1 = \frac{P_1}{\cos\theta_1} = \frac{24}{0.8} = 30 \text{ kVA}$$

$$Q_1 = S_1 \sin\theta_1 = (30)(0.6) = 18 \text{ kVAR}$$

$$\mathbf{S}_1 = 24 + j18 \text{ kVA}$$

$$\theta_2 = \cos^{-1}(0.95) = 18.19°$$

$$S_2 = \frac{P_2}{\cos\theta_2} = \frac{40}{0.95} = 42.105 \text{ kVA}$$

$$Q_2 = S_2 \sin\theta_2 = 13.144 \text{ kVAR}$$

$$\mathbf{S}_2 = 40 + j13.144 \text{ kVA}$$

$$\mathbf{S} = \mathbf{S}_1 + \mathbf{S}_2 = 64 + j31.144 \text{ kVA}$$

$$\theta = \tan^{-1}\left(\frac{31.144}{64}\right) = 25.95°$$

$$\text{pf} = \cos\theta = \mathbf{0.8992}$$

(b) $\theta_2 = 25.95°$, $\theta_1 = 0°$

$$Q_c = P[\tan\theta_2 - \tan\theta_1] = 64[\tan(25.95°) - 0] = 31.144 \text{ kVAR}$$

$$C = \frac{Q_c}{\omega V_{rms}^2} = \frac{31{,}144}{(2\pi)(60)(120)^2} = \mathbf{5.74\ mF}$$

www.konkur.in

Chapter 11, Solution 75.

(a) $$\mathbf{S}_1 = \frac{|\mathbf{V}|^2}{\mathbf{Z}_1^*} = \frac{(240)^2}{80 + j50} = \frac{5760}{8 + j5} = 517.75 - j323.59 \text{ VA}$$

$$\mathbf{S}_2 = \frac{(240)^2}{120 - j70} = \frac{5760}{12 - j7} = 358.13 + j208.91 \text{ VA}$$

$$\mathbf{S}_3 = \frac{(240)^2}{60} = 960 \text{ VA}$$

$$\mathbf{S} = \mathbf{S}_1 + \mathbf{S}_2 + \mathbf{S}_3 = \mathbf{[1.8359 - \mathit{j}0.11468]}\ \boldsymbol{kVA}$$

(b) $$\theta = \tan^{-1}\left(\frac{114.68}{1835.88}\right) = 3.574°$$

$$\text{pf} = \cos\theta = \mathbf{0.998}\ \{\text{leading}\}$$

(c) Since the circuit already has a leading power factor, near unity, no compensation is necessary.

www.konkur.in

Chapter 11, Solution 76.

The wattmeter reads the real power supplied by the current source. Consider the circuit below.

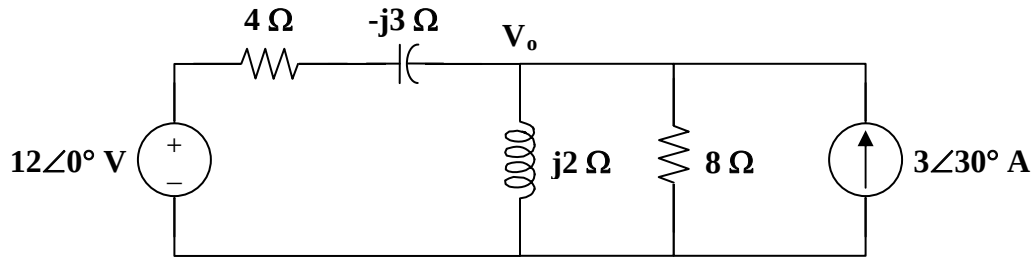

$$3\angle 30° + \frac{12 - \mathbf{V}_o}{4 - j3} = \frac{\mathbf{V}_o}{j2} + \frac{\mathbf{V}_o}{8}$$

$$\mathbf{V}_o = \frac{36.14 + j23.52}{2.28 - j3.04} = 0.7547 + j11.322 = 11.347\angle 86.19°$$

$$\mathbf{S} = \mathbf{V}_o \mathbf{I}_o^* = (11.347\angle 86.19°)(3\angle -30°)$$

$$\mathbf{S} = 34.04\angle 56.19° \text{ VA}$$

$$P = \text{Re}(\mathbf{S}) = \mathbf{18.942\ W}$$

www.konkur.in

Chapter 11, Solution 77.

The wattmeter measures the power absorbed by the parallel combination of 0.1 F and 150 Ω.

$$120\cos(2t) \longrightarrow 120\angle 0^\circ, \qquad \omega = 2$$

$$4\text{ H} \longrightarrow j\omega L = j8$$

$$0.1\text{ F} \longrightarrow \frac{1}{j\omega C} = -j5$$

Consider the following circuit.

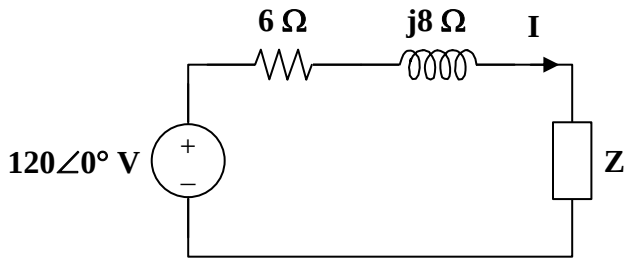

$$\mathbf{Z} = 15 \,||\, (-j5) = \frac{(15)(-j5)}{15 - j5} = 1.5 - j4.5$$

$$\mathbf{I} = \frac{120}{(6 + j8) + (1.5 - j4.5)} = 14.5\angle -25.02^\circ$$

$$\mathbf{S} = \frac{1}{2}\mathbf{V}\,\mathbf{I}^* = \frac{1}{2}|\mathbf{I}|^2\,\mathbf{Z} = \frac{1}{2}\cdot(14.5)^2(1.5 - j4.5)$$

$$\mathbf{S} = 157.69 - j473.06 \text{ VA}$$

The wattmeter reads

$$P = \text{Re}(\mathbf{S}) = \mathbf{157.69\ W}$$

www.konkur.in

Chapter 11, Solution 78.

The wattmeter reads the power absorbed by the element to its right side.

$$2\cos(4t) \longrightarrow 2\angle 0^\circ, \qquad \omega = 4$$

$$1\,\text{H} \longrightarrow j\omega L = j4$$

$$\frac{1}{12}\,\text{F} \longrightarrow \frac{1}{j\omega C} = -j3$$

Consider the following circuit.

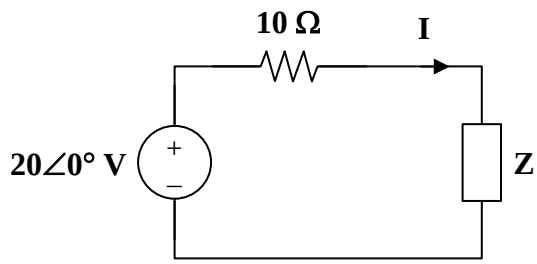

$$\mathbf{Z} = 5 + j4 + 4 \,||\, -j3 = 5 + j4 + \frac{(4)(-j3)}{4 - j3}$$

$$\mathbf{Z} = 6.44 + j2.08$$

$$\mathbf{I} = \frac{20}{16.44 + j2.08} = 1.207\angle -7.21^\circ$$

$$\mathbf{S} = \frac{1}{2}\left|\mathbf{I}\right|^2 \mathbf{Z} = \frac{1}{2}\cdot(1.207)^2(6.44 + j2.08)$$

$$P = \text{Re}(\mathbf{S}) = \mathbf{4.691\ W}$$

www.konkur.in

Chapter 11, Solution 79.

The wattmeter reads the power supplied by the source and partly absorbed by the 40-Ω resistor.

$\omega = 100,$

$$10\,\text{mH} \longrightarrow j100x10x10^{-3} = j, \quad 500\mu F \longrightarrow \frac{1}{j\omega C} = \frac{1}{j100x500x10^{-6}} = -j20$$

The frequency-domain circuit is shown below.

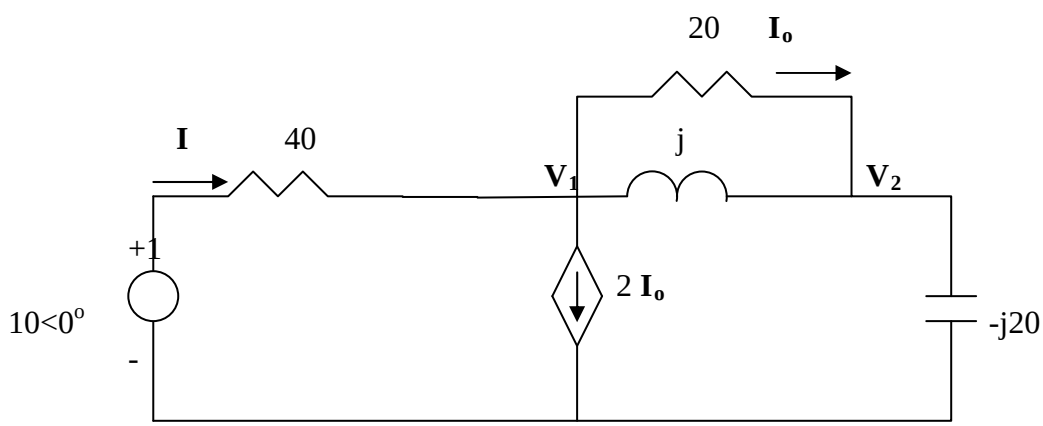

At node 1,

$$\frac{10 - V_1}{40} = 2I_o + \frac{V_1 - V_2}{j} + \frac{V_1 - V_2}{20} = \frac{3(V_1 - V_2)}{20} + \frac{V_1 - V_2}{j} \longrightarrow \quad (1)$$

$$10 = (7 - j40)V_1 + (-6 + j40)V_2$$

At node 2,

$$\frac{V_1 - V_2}{j} + \frac{V_1 - V_2}{20} = \frac{V_2}{-j20} \longrightarrow 0 = (20 + j)V_1 - (19 + j)V_2 \quad (2)$$

Solving (1) and (2) yields V_1 = 1.5568 –j4.1405

$$I = \frac{10 - V_1}{40} = 0.2111 + j0.1035, \qquad S = \frac{1}{2}V_1 I^* = -0.04993 - j0.5176$$

P = Re(S) = **50 mW**.

www.konkur.in

Chapter 11, Solution 80.

(a) $$|\mathbf{I}| = \frac{|\mathbf{V}|}{|\mathbf{Z}|} = \frac{110}{6.4} = \mathbf{17.19\ A}$$

(b) $$|\mathbf{S}| = \frac{|\mathbf{V}|^2}{|\mathbf{Z}|} = \frac{(110)^2}{6.4} = 1890.6$$

$$\cos\theta = \text{pf} = 0.825 \longrightarrow \theta = 34.41°$$

$$P = S\cos\theta = 1559.8 \cong \mathbf{1.6\ kW}$$

www.konkur.in

Chapter 11, Solution 81.

Design a problem to help other students to better understand how to correct power factor to values other than unity.

Although there are many ways to work this problem, this is an example based on the same kind of problem asked in the third edition.

Problem

A 120-V rms, 60-Hz electric hair dryer consumes 600 W at a lagging pf of 0.92. Calculate the rms-valued current drawn by the dryer.

How would you power factor correct this to a value of 0.95?

Solution

P = 600 W, $pf = 0.92 \longrightarrow \theta = 23.074^o$

$P = S\cos\theta \longrightarrow S = \dfrac{P}{0.92} = 652.17$ VA

S = P+jQ = 600 + j652.17sin23.09^o = 600 +j255.6

But $S = V_{rms} I_{rms}^*$.

$$I_{rms}^* = \frac{S}{V_{rms}} = \frac{600 + j255.6}{120}$$

$$I_{rms} = 5 - j2.13 = \mathbf{5.435\angle{-23.07^\circ}A}.$$

To correct this to a pf = 0.95, I would add a capacitor in parallel with the hair dryer (remember, series compensation will increase the power delivered to the load and probably burn out the hair dryer.

pf = 0.95 = 600/S or S = 631.6 VA and θ = 18.19˚ and VARs = 197.17

Thus,

$VARs_{cap}$ = 255.6 – 197.17 = 58.43 = 120xI_C or I_C = 58.43/120 = 0.4869A

Next,

X_C = 120/0.4869 = 246.46 = 1/(377xC) or C = **10.762 μF**

www.konkur.in

Chapter 11, Solution 82.

(a) $P_1 = 5{,}000, \quad Q_1 = 0$

$$P_2 = 30{,}000x0.82 = 24{,}600, \quad Q_2 = 30{,}000\sin(\cos^{-1} 0.82) = 17{,}171$$

$$\bar{S} = \bar{S}_1 + \bar{S}_2 = (P_1 + P_2) + j(Q_1 + Q_2) = 29{,}600 + j17{,}171$$

$$\boldsymbol{S = |\bar{S}| = \underline{34.22\,\text{kVA}}}$$

(b) Q = **17.171 kVAR**

(c) $pf = \dfrac{P}{S} = \dfrac{29{,}600}{34{,}220} = 0.865$

$$\boldsymbol{Q_c = P(\tan\theta_1 - \tan\theta_2)}$$
$$\boldsymbol{= 29{,}600\left[\tan(\cos^{-1} 0.865) - \tan(\cos^{-1} 0.9)\right] = \underline{2833\ \text{VAR}}}$$

(c) $$\boldsymbol{C = \frac{Q_c}{\omega V^2{}_{rms}} = \frac{2833}{2\pi x 60 x 240^2} = \underline{130.46\mu\text{F}}}$$

www.konkur.in

Chapter 11, Solution 83.

(a) $\overline{S} = \frac{1}{2}VI^* = \frac{1}{2}(210\angle 60^o)(8\angle -25^o) = 840\angle 35^o$

$$\boldsymbol{P = S\cos\theta = 840\cos 35^o = \underline{688.1\text{ W}}}$$

(b) S = **<u>840 VA</u>**

(c) $\boldsymbol{Q = S\sin\theta = 840\sin 35^o = \underline{481.8\text{ VAR}}}$

(d) $\boldsymbol{pf = P/S = \cos 35^o = \underline{0.8191\ \text{(lagging)}}}$

www.konkur.in

Chapter 11, Solution 84.

(a) Maximum demand charge $= 2{,}400 \times 30 = \$72{,}000$

Energy cost $= \$0.04 \times 1{,}200 \times 10^3 = \$48{,}000$

Total charge = **$120,000**

(b) To obtain $120,000 from 1,200 MWh will require a flat rate of

$$\frac{\$120{,}000}{1{,}200 \times 10^3} \text{ per kWh} = \textbf{\$0.10 per kWh}$$

Chapter 11, Solution 85.

(a) 15 mH $\longrightarrow$ $j2\pi x60x15x10^{-3} = j5.655$

We apply mesh analysis as shown below.

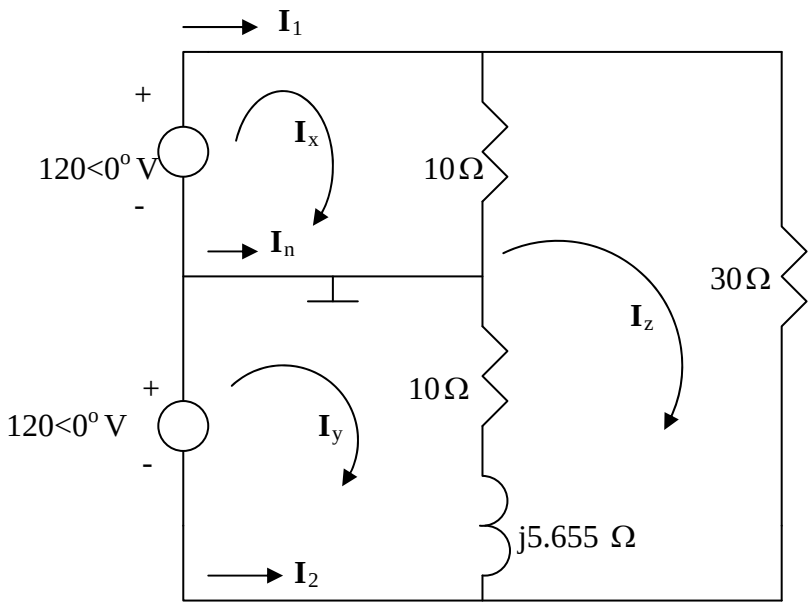

For mesh x,

$120 = 10\,\mathbf{I}_x - 10\,\mathbf{I}_z$ (1)

For mesh y,

$120 = (10+j5.655)\,\mathbf{I}_y - (10+j5.655)\,\mathbf{I}_z$ (2)

For mesh z,

$0 = -10\,\mathbf{I}_x - (10+j5.655)\,\mathbf{I}_y + (50+j5.655)\,\mathbf{I}_z$ (3)

Solving (1) to (3) gives

$\mathbf{I}_x = 20$, $\mathbf{I}_y = 17.09-j5.142$, $\mathbf{I}_z = 8$

Thus,

$\mathbf{I}_1 = \mathbf{I}_x = \mathbf{20\ A}$

$\mathbf{I}_2 = -\mathbf{I}_y = -17.09+j5.142 = \underline{\mathbf{17.85\angle 163.26^o\ A}}$

$\mathbf{I}_n = \mathbf{I}_y - \mathbf{I}_x = -2.91 - j5.142 = \underline{\mathbf{5.907\angle -119.5^o\ A}}$

(b) $\overline{S_1} = (120)I^{\bullet}{}_x = 120x20 = 2400$, $\overline{S_2} = (120)I^{\bullet}{}_y = 2051 + j617$

$\underline{\boldsymbol{\overline{S} = \overline{S_1} + \overline{S_2} = [4.451 + j0.617]\,\mathbf{kVA}}}$

(c) pf = P/S = 4451/4494 = **0.9904** (lagging)

www.konkur.in

Chapter 11, Solution 86.

For maximum power transfer

$$\mathbf{Z}_L = \mathbf{Z}_{Th}^* \longrightarrow \mathbf{Z}_i = \mathbf{Z}_{Th} = \mathbf{Z}_L^*$$

$$\mathbf{Z}_L = R + j\omega L = 75 + j(2\pi)(4.12\times10^6)(4\times10^{-6})$$

$$\mathbf{Z}_L = 75 + j103.55\,\Omega$$

$$\mathbf{Z}_i = \mathbf{[75 - \mathit{j}103.55]\,\Omega}$$

www.konkur.in

Chapter 11, Solution 87.

$$\mathbf{Z} = R \pm jX$$

$$\mathbf{V}_R = \mathbf{I}\,R \longrightarrow R = \frac{\mathbf{V}_R}{\mathbf{I}} = \frac{80}{50 \times 10^{-3}} = 1.6\ \text{k}\Omega$$

$$|\mathbf{Z}|^2 = R^2 + X^2 \longrightarrow X^2 = |\mathbf{Z}|^2 - R^2 = (3)^2 - (1.6)^2$$

$$X = 2.5377\ \text{k}\Omega$$

$$\theta = \tan^{-1}\left(\frac{X}{R}\right) = \tan^{-1}\left(\frac{2.5377}{1.6}\right) = 57.77°$$

$$\text{pf} = \cos\theta = \mathbf{0.5333}$$

www.konkur.in

Chapter 11, Solution 88.

(a) $\mathbf{S} = (110)(2\angle 55°) = 220\angle 55°$

$$P = S\cos\theta = 220\cos(55°) = \mathbf{126.2\ W}$$

(b) $S = |\mathbf{S}| = \mathbf{220\ VA}$

www.konkur.in

Chapter 11, Solution 89.

(a) Apparent power = S = **12 kVA**

$$P = S\cos\theta = (12)(0.78) = 9.36 \text{ kW}$$
$$Q = S\sin\theta = 12\sin(\cos^{-1}(0.78)) = 7.51 \text{ kVAR}$$

$$\mathbf{S} = P + jQ = \mathbf{[9.36 + \boldsymbol{j}7.51]\ \boldsymbol{kVA}}$$

(b) $$\mathbf{S} = \frac{|\mathbf{V}|^2}{\mathbf{Z}^*} \longrightarrow \mathbf{Z}^* = \frac{|\mathbf{V}|^2}{\mathbf{S}} = \frac{(210)^2}{(9.36 + j7.51)\times 10^3} = 2.866 - j2.3$$

$$\mathbf{Z} = \mathbf{[2.866 + j2.3]\ \Omega}$$

www.konkur.in

Chapter 11, Solution 90

Original load :

$$P_1 = 2000 \text{ kW}, \qquad \cos\theta_1 = 0.85 \longrightarrow \theta_1 = 31.79°$$

$$S_1 = \frac{P_1}{\cos\theta_1} = 2352.94 \text{ kVA}$$

$$Q_1 = S_1 \sin\theta_1 = 1239.5 \text{ kVAR}$$

Additional load :

$$P_2 = 300 \text{ kW}, \qquad \cos\theta_2 = 0.8 \longrightarrow \theta_2 = 36.87°$$

$$S_2 = \frac{P_2}{\cos\theta_2} = 375 \text{ kVA}$$

$$Q_2 = S_2 \sin\theta_2 = 225 \text{ kVAR}$$

Total load :

$$\mathbf{S} = \mathbf{S}_1 + \mathbf{S}_2 = (P_1 + P_2) + j(Q_1 + Q_2) = P + jQ$$

$$P = 2000 + 300 = 2300 \text{ kW}$$

$$Q = 1239.5 + 225 = 1464.5 \text{ kVAR}$$

The minimum operating pf for a 2300 kW load and not exceeding the kVA rating of the generator is

$$\cos\theta = \frac{P}{S_1} = \frac{2300}{2352.94} = 0.9775$$

or $\qquad \theta = 12.177°$

The maximum load kVAR for this condition is

$$Q_m = S_1 \sin\theta = 2352.94 \sin(12.177°)$$

$$Q_m = 496.313 \text{ kVAR}$$

The capacitor must supply the difference between the total load kVAR (i.e. Q) and the permissible generator kVAR (i.e. Q_m). Thus,

$$Q_c = Q - Q_m = \mathbf{968.2\ kVAR}$$

www.konkur.in

Chapter 11, Solution 91

The nameplate of an electric motor has the following information:

Line voltage: 220 V rms
Line current: 15 A rms
Line frequency: 60 Hz
Power: 2700 W

Determine the power factor (lagging) of the motor. Find the value of the capacitance *C* that must be connected across the motor to raise the pf to unity.

Solution

I = V/Z which leads to Z = [220/15]∠θ = 14.6667∠θ, S = (220)(15)∠θ = 3.3∠θ

kVA, where $\cos^{-1}(2700/3300) = \cos^{-1}(0.818182) = 35.097°$, and X_L = 3300sin(35.097°) = 1897.38 = X_C. This leads to C = 1/[377(1897.38)] = **1.398 μF**.

pf = **0.8182** (lagging)

C = **1.398 μF**

0.8182 (lagging), **1.398 μF**

www.konkur.in

Chapter 11, Solution 92

(a) Apparent power drawn by the motor is

$$S_m = \frac{P}{\cos\theta} = \frac{60}{0.75} = 80 \text{ kVA}$$

$$Q_m = \sqrt{S^2 - P^2} = \sqrt{(80)^2 - (60)^2} = 52.915 \text{ kVAR}$$

Total real power

$$P = P_m + P_c + P_L = 60 + 0 + 20 = 80 \text{ kW}$$

Total reactive power

$$Q = Q_m + Q_c + Q_L = 52.915 - 20 + 0 = \mathbf{32.91\ kVAR}$$

Total apparent power

$$S = \sqrt{P^2 + Q^2} = \mathbf{86.51\ kVA}$$

(b) $\text{pf} = \frac{P}{S} = \frac{80}{86.51} = \mathbf{0.9248}$

(c) $I = \frac{S}{V} = \frac{86510}{550} = \mathbf{157.3\ A}$

www.konkur.in

Chapter 11, Solution 93

(a) $P_1 = (5)(0.7457) = 3.7285 \text{ kW}$

$$S_1 = \frac{P_1}{pf} = \frac{3.7285}{0.8} = 4.661 \text{ kVA}$$

$Q_1 = S_1 \sin(\cos^{-1}(0.8)) = 2.796 \text{ kVAR}$

$\mathbf{S}_1 = 3.7285 + j2.796 \text{ kVA}$

$P_2 = 1.2 \text{ kW}, \qquad Q_2 = 0 \text{ VAR}$

$\mathbf{S}_2 = 1.2 + j0 \text{ kVA}$

$P_3 = (10)(120) = 1.2 \text{ kW}, \qquad Q_3 = 0 \text{ VAR}$

$\mathbf{S}_3 = 1.2 + j0 \text{ kVA}$

$Q_4 = 1.6 \text{ kVAR}, \qquad \cos\theta_4 = 0.6 \longrightarrow \sin\theta_4 = 0.8$

$$S_4 = \frac{Q_4}{\sin\theta_4} = 2 \text{ kVA}$$

$P_4 = S_4 \cos\theta_4 = (2)(0.6) = 1.2 \text{ kW}$

$\mathbf{S}_4 = 1.2 - j1.6 \text{ kVA}$

$\mathbf{S} = \mathbf{S}_1 + \mathbf{S}_2 + \mathbf{S}_3 + \mathbf{S}_4$

$\mathbf{S} = 7.3285 + j1.196 \text{ kVA}$

Total real power = **7.3285 kW**

Total reactive power = **1.196 kVAR**

(b) $$\theta = \tan^{-1}\left(\frac{1.196}{7.3285}\right) = 9.27°$$

pf $= \cos\theta =$ **0.987**

www.konkur.in

Chapter 11, Solution 94

$$\cos\theta_1 = 0.7 \longrightarrow \theta_1 = 45.57°$$
$$S_1 = 1\text{ MVA} = 1000\text{ kVA}$$
$$P_1 = S_1\cos\theta_1 = 700\text{ kW}$$
$$Q_1 = S_1\sin\theta_1 = 714.14\text{ kVAR}$$

For improved pf,

$$\cos\theta_2 = 0.95 \longrightarrow \theta_2 = 18.19°$$
$$P_2 = P_1 = 700\text{ kW}$$
$$S_2 = \frac{P_2}{\cos\theta_2} = \frac{700}{0.95} = 736.84\text{ kVA}$$
$$Q_2 = S_2\sin\theta_2 = 230.08\text{ kVAR}$$

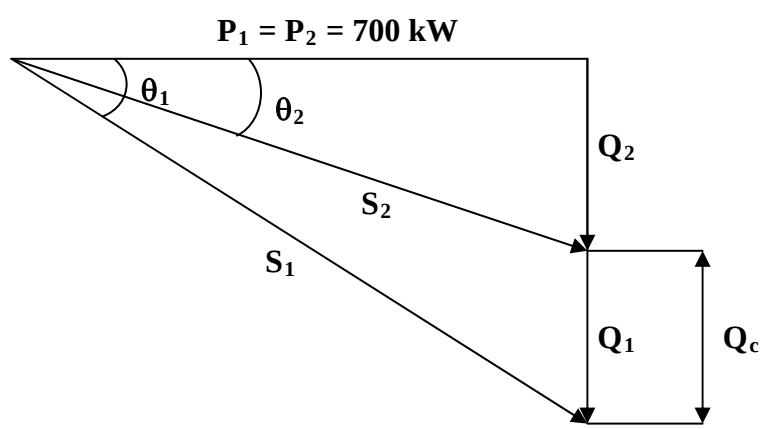

(a) Reactive power across the capacitor

$$Q_c = Q_1 - Q_2 = 714.14 - 230.08 = 484.06\text{ kVAR}$$

Cost of installing capacitors $= \$30 \times 484.06 =$ **\$14,521.80**

(b) Substation capacity released $= S_1 - S_2$

$$= 1000 - 736.84 = 263.16\text{ kVA}$$

Saving in cost of substation and distribution facilities

$$= \$120 \times 263.16 = \textbf{\$31,579.20}$$

(c) **Yes**, because (a) is greater than (b). Additional system capacity obtained by using capacitors costs only 46% as much as new substation and distribution facilities.

www.konkur.in

Chapter 11, Solution 95

(a) Source impedance $\mathbf{Z}_s = R_s - jX_c$

Load impedance $\mathbf{Z}_L = R_L + jX_2$

For maximum load transfer

$$\mathbf{Z}_L = \mathbf{Z}_s^* \longrightarrow R_s = R_L, \quad X_c = X_L$$

$$X_c = X_L \longrightarrow \frac{1}{\omega C} = \omega L$$

or $$\omega = \frac{1}{\sqrt{LC}} = 2\pi f$$

$$f = \frac{1}{2\pi\sqrt{LC}} = \frac{1}{2\pi\sqrt{(80\times10^{-3})(40\times10^{-9})}} = \mathbf{2.814\ kHz}$$

(b) $$P = \left(\frac{V_s}{(10+4)}\right)^2 4 = \left(\frac{4.6}{14}\right)^2 4 = \mathbf{431.8\ mW}$$ (since V_s is in rms)

www.konkur.in

Chapter 11, Solution 96

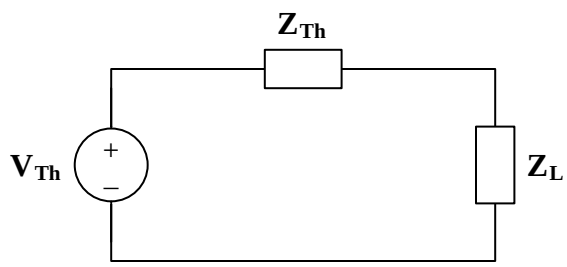

(a) $V_{Th} = 146\text{ V}, \quad 300\text{ Hz}$

$Z_{Th} = 40 + j8\,\Omega$

$Z_L = Z_{Th}^* = \mathbf{[40 - \mathit{j}8]\,\Omega}$

(b) $P = \dfrac{|V_{Th}|^2}{8R_{Th}} = \dfrac{(146)^2}{(8)(40)} = \mathbf{66.61\ W}$

www.konkur.in

Chapter 11, Solution 97

$$Z_T = (2)(0.1 + j) + (100 + j20) = 100.2 + j22\ \Omega$$

$$I = \frac{V_s}{Z_T} = \frac{240}{100.2 + j22}$$

$$P = |I|^2 R_L = 100|I|^2 = \frac{(100)(240)^2}{(100.2)^2 + (22)^2} = \mathbf{547.3\ W}$$

www.konkur.in

Chapter 12, Solution 1.

(a) If $\mathbf{V}_{ab} = 400$, then

$$\mathbf{V}_{an} = \frac{400}{\sqrt{3}}\angle -30° = \mathbf{231\angle -30°\ V}$$

$$\mathbf{V}_{bn} = \mathbf{231\angle -150°\ V}$$

$$\mathbf{V}_{cn} = \mathbf{231\angle -270°\ V}$$

(b) For the acb sequence,

$$\mathbf{V}_{ab} = \mathbf{V}_{an} - \mathbf{V}_{bn} = V_p\angle 0° - V_p\angle 120°$$

$$\mathbf{V}_{ab} = V_p\left(1 + \frac{1}{2} - j\frac{\sqrt{3}}{2}\right) = V_p\sqrt{3}\angle -30°$$

i.e. in the acb sequence, $\mathbf{V}_{ab}$ lags $\mathbf{V}_{an}$ by 30°.

Hence, if $\mathbf{V}_{ab} = 400$, then

$$\mathbf{V}_{an} = \frac{400}{\sqrt{3}}\angle 30° = \mathbf{231\angle 30°\ V}$$

$$\mathbf{V}_{bn} = \mathbf{231\angle 150°\ V}$$

$$\mathbf{V}_{cn} = \mathbf{231\angle -90°\ V}$$

www.konkur.in

Chapter 12, Solution 2.

Since phase c lags phase a by 120°, this is an **acb sequence**.

$$\mathbf{V}_{bn} = 120\angle(30° + 120°) = \mathbf{120\angle 150°}\ \boldsymbol{V}$$

www.konkur.in

Chapter 12, Solution 3.

Since $\mathbf{V}_{\text{bn}}$ leads $\mathbf{V}_{\text{cn}}$ by 120°, this is an **abc sequence**.

$\mathbf{V}_{an} = 440\angle(130° + 120°) = \mathbf{440\angle{-110}°\ V}$.

www.konkur.in

Chapter 12, Solution 4.

Knowing the line-to-line voltages we can calculate the wye voltages and can let the value of V_a be a reference with a phase shift of zero degrees.

$V_L = 440 = \sqrt{3}V_p$ or $V_p = 440/1.7321 = 254$ V or $\mathbf{V_{an}} = 254\angle 0°$ V which

determines, using abc roataion, both $\mathbf{V_{bn}} = 254\angle -120°$ and $\mathbf{V_{cn}} = 254\angle 120°$.

$\mathbf{I}_a = \mathbf{V}_{an}/\mathbf{Z}_Y = 254/(40\angle 30°) = \mathbf{6.35\angle -30^\circ\ A}$

$\mathbf{I}_b = \mathbf{I}_a\angle -120^\circ = \mathbf{6.35\angle -150^\circ\ A}$

$\mathbf{I}_c = \mathbf{I}_a\angle +120^\circ = \mathbf{6.35\angle 90^\circ\ A}$

www.konkur.in

Chapter 12, Solution 5.

$\mathbf{V}_{AB} = 1.7321x\mathbf{V}_{AN}\angle{+30^\circ} = 207.8\angle(32^\circ+30^\circ) = 207.8\angle 62^\circ$ V or

$$v_{AB} = \mathbf{207.8\cos(\omega t+62^\circ)\ V}$$

which also leads to,

$$v_{BC} = \mathbf{207.8\cos(\omega t-58^\circ)\ V}$$

and

$$v_{CA} = \mathbf{207.8\cos(\omega t+182^\circ)\ V}$$

207.8cos(ωt+62°) V, 207.8cos(ωt–58°) V, 207.8cos(ωt+182°) V

www.konkur.in

Chapter 12, Solution 6.

Using Fig. 12.41, design a problem to help other students to better understand balanced wye-wye connected circuits.

Although there are many ways to work this problem, this is an example based on the same kind of problem asked in the third edition.

Problem

For the Y-Y circuit of Fig. 12.41, find the line currents, the line\ voltages, and the load voltages.

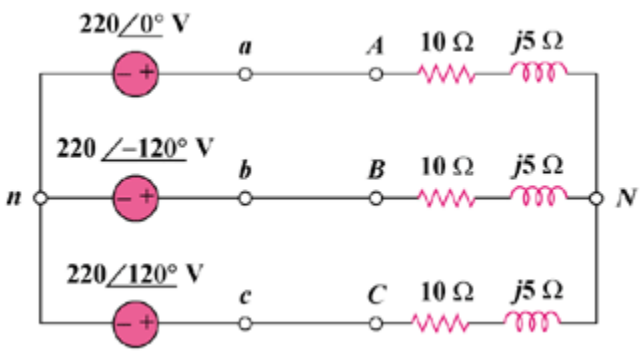

Figure 12.41

Solution

$$\mathbf{Z}_Y = 10 + j5 = 11.18\angle 26.56°$$

The line currents are

$$\mathbf{I}_a = \frac{\mathbf{V}_{an}}{\mathbf{Z}_Y} = \frac{220\angle 0°}{11.18\angle 26.56°} = \mathbf{19.68\angle -26.56°\ A}$$

$$\mathbf{I}_b = \mathbf{I}_a\angle -120° = \mathbf{19.68\angle -146.56°\ A}$$

$$\mathbf{I}_c = \mathbf{I}_a\angle 120° = \mathbf{19.68\angle 93.44°\ A}$$

The line voltages are

$$\mathbf{V}_{ab} = 220\sqrt{3}\angle 30° = \mathbf{381\angle 30°\ V}$$

$$\mathbf{V}_{bc} = \mathbf{381\angle -90°\ V}$$

$$\mathbf{V}_{ca} = \mathbf{381\angle -210°\ V}$$

The load voltages are

$$\mathbf{V}_{AN} = \mathbf{I}_a\,\mathbf{Z}_Y = \mathbf{V}_{an} = \mathbf{220\angle 0°\ V}$$

$$\mathbf{V}_{BN} = \mathbf{V}_{bn} = \mathbf{220\angle -120°\ V}$$

$$\mathbf{V}_{CN} = \mathbf{V}_{cn} = \mathbf{220\angle 120°\ V}$$

www.konkur.in

Chapter 12, Solution 7.

This is a balanced Y-Y system.

Using the per-phase circuit shown above,

$$\mathbf{I}_a = \frac{440\angle 0°}{6 - j8} = \mathbf{44\angle 53.13°\ A}$$

$$\mathbf{I}_b = \mathbf{I}_a \angle -120° = \mathbf{44\angle -66.87°\ A}$$

$$\mathbf{I}_c = \mathbf{I}_a \angle 120° = \mathbf{44\angle 173.13°\ A}$$

www.konkur.in

Chapter 12, Solution 8.

Consider the per phase equivalent circuit shown below.

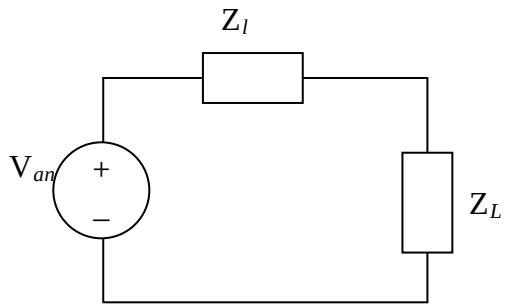

5.396∠–35.1˚ A

$\mathbf{I_a} = \mathbf{V_{an}}/(\mathbf{Z_l} + \mathbf{Z_L}) = (100\angle 20°)/(10.6+j15.2) = (100\angle 20°)/(18.531\angle 55.11°)$

$= \mathbf{5.396\angle -35.11°}$ **amps**.

$\mathbf{I_b} = \mathbf{I_a}\ \angle -120° = \mathbf{5.396\angle -155.11°}$ **amps**.

$\mathbf{I_c} = \mathbf{I_a}\ \angle +120° = \mathbf{5.396\angle 84.89°}$ **amps**.

$\mathbf{V_{La}} = \mathbf{I_a Z_L} = (4.414 - j3.103)(10+j14) = (5.396\angle -35.11°)(17.205\angle 54.46°)$

www.konkur.in

$= \mathbf{92.84\angle 19.35°}$ **volts**.

$\mathbf{V}_{\boldsymbol{Lb}} = \mathbf{V}_{\boldsymbol{La}} \angle -120° = \mathbf{94.84\angle -100.65°}$ **volts**.

$\mathbf{V}_{\boldsymbol{Lc}} = \mathbf{V}_{\boldsymbol{La}} \angle +120° = \mathbf{94.84\angle 139.35°}$ **volts**.

www.konkur.in

Chapter 12, Solution 9.

$$\mathbf{I}_a = \frac{\mathbf{V}_{an}}{\mathbf{Z}_L + \mathbf{Z}_Y} = \frac{120\angle 0°}{20 + j15} = \mathbf{4.8\angle -36.87° \ A}$$

$$\mathbf{I}_b = \mathbf{I}_a \angle -120° = \mathbf{4.8\angle -156.87° \ A}$$

$$\mathbf{I}_c = \mathbf{I}_a \angle 120° = \mathbf{4.8\angle 83.13° \ A}$$

As a balanced system, $\mathbf{I}_n = \mathbf{0 \ A}$

www.konkur.in

Chapter 12, Solution 10.

Since the neutral line is present, we can solve this problem on a per-phase basis.

For phase a,

$$\mathbf{I}_a = \frac{\mathbf{V}_{an}}{\mathbf{Z}_A + 2} = \frac{440\angle 0°}{27 - j10} = \frac{440}{28.79\angle -20.32°} = 15.283\angle 20.32°$$

For phase b,

$$\mathbf{I}_b = \frac{\mathbf{V}_{bn}}{\mathbf{Z}_B + 2} = \frac{440\angle -120°}{22} = 20\angle -120°$$

For phase c,

$$\mathbf{I}_c = \frac{\mathbf{V}_{cn}}{\mathbf{Z}_C + 2} = \frac{440\angle 120°}{12 + j5} = \frac{440\angle 120°}{13\angle 22.62°} = 33.85\angle 97.38°$$

The current in the neutral line is

$$\mathbf{I}_n = -(\mathbf{I}_a + \mathbf{I}_b + \mathbf{I}_c) \text{ or } -\mathbf{I}_n = \mathbf{I}_a + \mathbf{I}_b + \mathbf{I}_c$$

$$-\mathbf{I}_n = (14.332 + j5.308) + (-10 - j17.321) + (-4.346 + j33.57)$$

$$\mathbf{I}_n = 0.014 - j21.56 = \mathbf{21.56\angle -89.96°A}$$

www.konkur.in

Chapter 12, Solution 11.

Given that $V_p = 240$ and that the system is balanced, $V_L = 1.7321V_p = 415.7$ V.

$I_p = V_L/|2–j3| = 415.7/3.606 = 115.29$ A and

$$I_L = 1.7321x115.29 = \mathbf{199.69\ A}.$$

www.konkur.in

Chapter 12, Solution 12.

Using Fig. 12.45, design a problem to help other students to better understand wye-delta connected circuits.

Although there are many ways to solve this problem, this is an example based on the same kind of problem asked in the third edition.

Problem

Solve for the line currents in the **Y-Δ** circuit of Fig. 12.45. Take $\mathbf{Z}_\Delta = 60\angle 45°\Omega$.

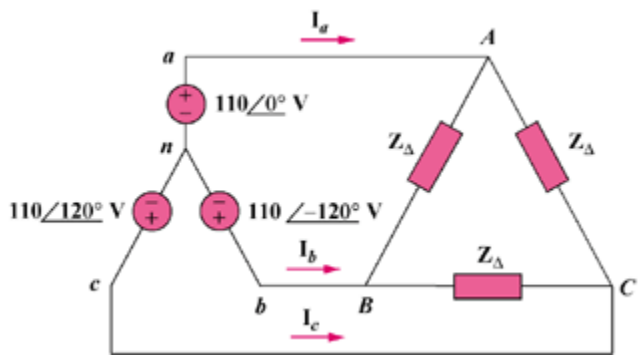

Figure 12.45

Solution

Convert the delta-load to a wye-load and apply per-phase analysis.

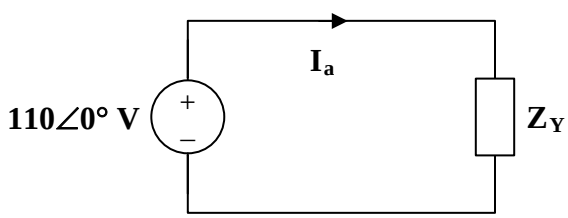

$$\mathbf{Z}_Y = \frac{\mathbf{Z}_\Delta}{3} = 20\angle 45°\ \Omega$$

$$\mathbf{I}_a = \frac{110\angle 0°}{20\angle 45°} = \mathbf{5.5\angle -45°\ A}$$

$$\mathbf{I}_b = \mathbf{I}_a\angle -120° = \mathbf{5.5\angle -165°\ A}$$

$$\mathbf{I}_c = \mathbf{I}_a\angle 120° = \mathbf{5.5\angle 75°\ A}$$

www.konkur.in

Chapter 12, Solution 13.

Convert the delta load to wye as shown below.

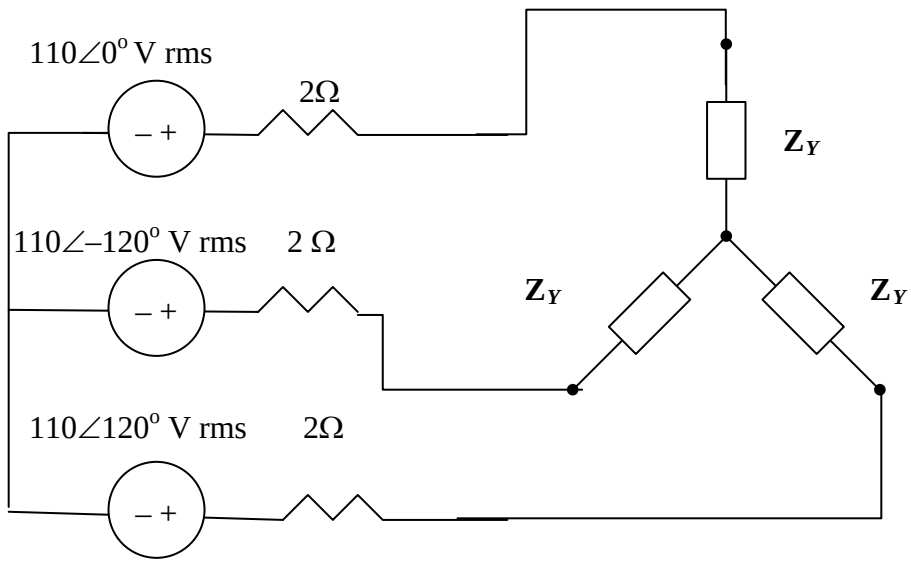

$$Z_Y = \frac{1}{3} Z_\Delta = 3 - j2\ \Omega$$

We consider the single phase equivalent shown below.

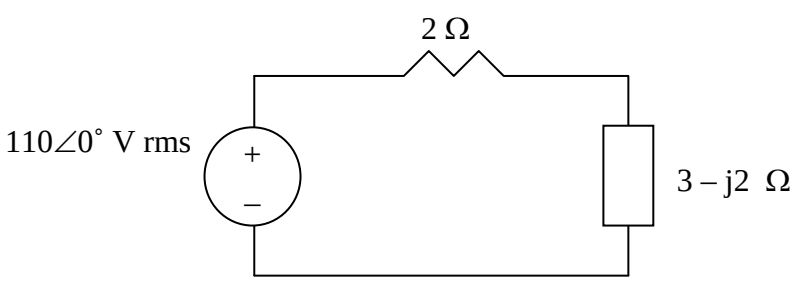

$\mathbf{I_a}$ = 110/(2 + 3 – j2) = 20.43∠21.8° A

$I_L = |\mathbf{I_a}| = \mathbf{20.43\ A}$

$S = 3|\mathbf{I}_a|^2 Z_Y = 3(20.43)^2(3–j2) = 4514\angle–33.96° = 3744 – j2522$

P = Re(S) = **3.744 kW**.

www.konkur.in

Chapter 12, Solution 14.

We apply mesh analysis with $Z_L = (12+j12)\ \Omega$.

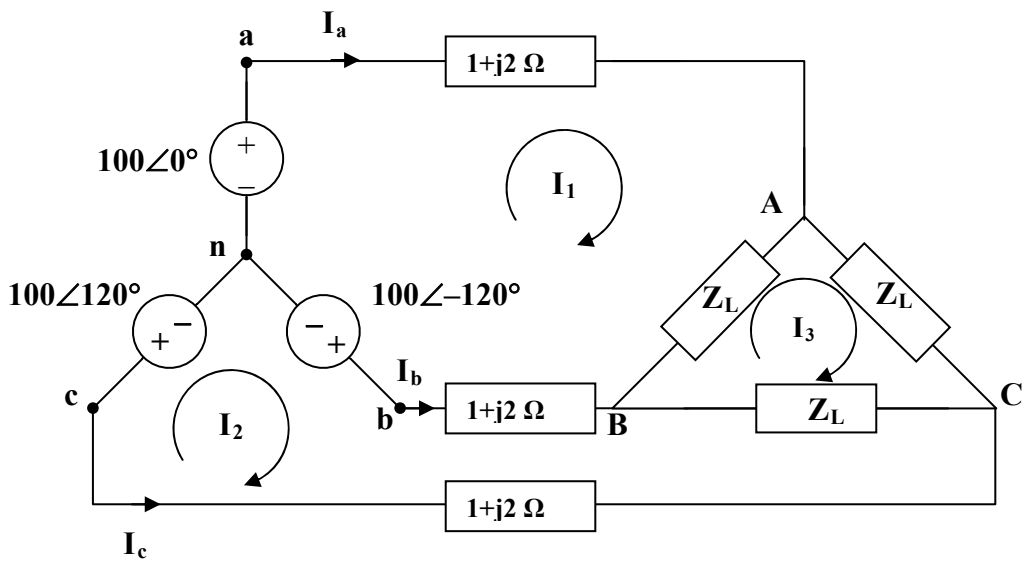

For mesh 1,

$$-100+100\angle-120^o+I_1(14+j16)-(1+j2)I_2-(12+j12)I_3=0 \text{ or}$$
$$(14+j16)I_1-(1+j2)I_2-(12+j12)I_3=100+50-j86.6=150+j86.6 \qquad (1)$$

For mesh 2,

$$100\angle120^o-100\angle-120^o-I_1(1+j2)-(12+j12)I_3+(14+j16)I_2=0 \text{ or}$$
$$-(1+j2)I_1+(14+j16)I_2-(12+j12)I_3=-50-j86.6+50-j86.6=-j173.2 \qquad (2)$$

For mesh 3,

$$-(12+j12)I_1-(12+j12)I_2+(36+j36)I_3=0 \text{ or } \mathbf{I_3=I_1+I_2} \qquad (3)$$

Solving for $\mathbf{I_1}$ and $\mathbf{I_2}$ using (1) to (3) gives

$\mathbf{I_1}$ = 12.804∠–50.19° A = (8.198 – j9.836) A and
$\mathbf{I_2}$ = 12.804∠–110.19° A = (–4.419 – j12.018) A

$$\mathbf{I_a = I_1 = 12.804\angle-50.19°\ A}$$

$$\mathbf{I_b = I_2 - I_1 = 12.804\angle-170.19°\ A}$$

$$\mathbf{I_c = -I_2 = 12.804\angle69.81°\ A}$$

As a check we can convert the delta into a wye circuit. Thus,

www.konkur.in

$\mathbf{Z_Y}$ = (12+j12)/3 = 4+j4 and $\mathbf{I_a}$ = 100/(1+j2+4+j4) = 100/(5+j6)

= 100/(7.8102∠50.19°) =

12.804 ∠–50.19° A.

So, the answer does check.

www.konkur.in

Chapter 12, Solution 15.

Convert the delta load, $\mathbf{Z}_\Delta$, to its equivalent wye load.

$$\mathbf{Z}_{Ye} = \frac{\mathbf{Z}_\Delta}{3} = 8 - j10$$

$$\mathbf{Z}_p = \mathbf{Z}_Y \parallel \mathbf{Z}_{Ye} = \frac{(12 + j5)(8 - j10)}{20 - j5} = 8.076\angle -14.68°$$

$$\mathbf{Z}_p = 7.812 - j2.047$$

$$\mathbf{Z}_T = \mathbf{Z}_p + \mathbf{Z}_L = 8.812 - j1.047$$

$$\mathbf{Z}_T = 8.874\angle -6.78°$$

We now use the per-phase equivalent circuit.

$$\mathbf{I}_a = \frac{V_p}{\mathbf{Z}_p + \mathbf{Z}_L}, \qquad \text{where} \quad V_p = \frac{210}{\sqrt{3}}$$

$$\mathbf{I}_a = \frac{210}{\sqrt{3}\,(8.874\angle -6.78°)} = 13.66\angle 6.78°$$

$$\mathbf{I}_L = \left|\mathbf{I}_a\right| = \mathbf{13.66\ A}$$

www.konkur.in

Chapter 12, Solution 16.

(a) $\mathbf{I}_{CA} = -\mathbf{I}_{AC} = 5\angle(-30° + 180°) = 5\angle 150°$

This implies that

$$\mathbf{I}_{AB} = 5\angle 30°$$
$$\mathbf{I}_{BC} = 5\angle -90°$$

$$\mathbf{I}_a = \mathbf{I}_{AB}\sqrt{3}\angle -30° = \mathbf{8.66\angle 0^\circ\ A}$$
$$\mathbf{I}_b = \mathbf{8.66\angle -120^\circ\ A}$$
$$\mathbf{I}_c = \mathbf{8.66\angle 120^\circ\ A}$$

(b) $\mathbf{Z}_\Delta = \dfrac{\mathbf{V}_{AB}}{\mathbf{I}_{AB}} = \dfrac{110\angle 0°}{5\angle 30°} = \mathbf{22\angle -30^\circ\ \Omega}.$

www.konkur.in

Chapter 12, Solution 17.

$\mathbf{I}_a = 1.7321x\mathbf{I}_{AB}\angle{-30^\circ}$ or
$\mathbf{I}_{AB} = \mathbf{I}_a/(1.7321\angle{-30^\circ}) = 2.887\angle(-25^\circ+30^\circ) = \mathbf{2.887\angle 5^\circ\ A}$
$\mathbf{I}_{BC} = \mathbf{I}_{AB}\angle{-120^\circ} = \mathbf{2.887\angle{-115^\circ}\ A}$
$\mathbf{I}_{CA} = \mathbf{I}_{AB}\angle{+120^\circ} = \mathbf{2.887\angle 125^\circ\ A}$

$2.887\angle 5^\circ$ A, $2.887\angle{-115^\circ}$ A, $2.887\angle 125^\circ$ A

www.konkur.in

Chapter 12, Solution 18.

$$\mathbf{V}_{AB} = \mathbf{V}_{an}\sqrt{3}\angle 30° = (220\angle 60°)(\sqrt{3}\angle 30°) = 381.1\angle 90°$$

$$\mathbf{Z}_{\Delta} = 12 + j9 = 15\angle 36.87°$$

$$\mathbf{I}_{AB} = \frac{\mathbf{V}_{AB}}{\mathbf{Z}_{\Delta}} = \frac{381.1\angle 90°}{15\angle 36.87°} = \mathbf{25.4\angle 53.13^{\circ}\ A}$$

$$\mathbf{I}_{BC} = \mathbf{I}_{AB}\angle -120° = \mathbf{25.4\angle -66.87^{\circ}\ A}$$

$$\mathbf{I}_{CA} = \mathbf{I}_{AB}\angle 120° = \mathbf{25.4\angle 173.13^{\circ}\ A}$$

www.konkur.in

Chapter 12, Solution 19.

$$\mathbf{Z}_{\Delta} = 30 + j10 = 31.62\angle 18.43°$$

The phase currents are

$$\mathbf{I}_{AB} = \frac{\mathbf{V}_{ab}}{\mathbf{Z}_{\Delta}} = \frac{173\angle 0°}{31.62\angle 18.43°} = \mathbf{5.47\angle -18.43° \ A}$$

$$\mathbf{I}_{BC} = \mathbf{I}_{AB}\angle -120° = \mathbf{5.47\angle -138.43° \ A}$$

$$\mathbf{I}_{CA} = \mathbf{I}_{AB}\angle 120° = \mathbf{5.47\angle 101.57° \ A}$$

The line currents are

$$\mathbf{I}_{a} = \mathbf{I}_{AB} - \mathbf{I}_{CA} = \mathbf{I}_{AB}\sqrt{3}\angle -30°$$

$$\mathbf{I}_{a} = 5.47\sqrt{3}\angle -48.43° = \mathbf{9.474\angle -48.43° \ A}$$

$$\mathbf{I}_{b} = \mathbf{I}_{a}\angle -120° = \mathbf{9.474\angle -168.43° \ A}$$

$$\mathbf{I}_{c} = \mathbf{I}_{a}\angle 120° = \mathbf{9.474\angle 71.57° \ A}$$

www.konkur.in

Chapter 12, Solution 20.

Using Fig. 12.51, design a problem to help other students to better understand balanced delta-delta connected circuits.

Although there are many ways to solve this problem, this is an example based on the same kind of problem asked in the third edition.

Problem

Refer to the Δ-Δ circuit in Fig. 12.51. Find the line and phase currents. Assume that the load impedance is 12 + j9Ω per phase.

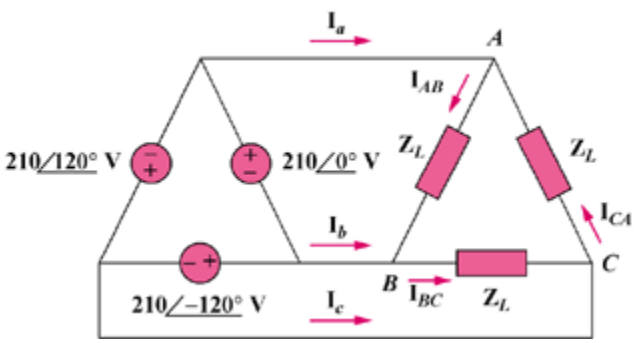

Figure 12.51

Solution

$$\mathbf{Z}_\Delta = 12 + j9 = 15\angle 36.87°$$

The phase currents are

$$\mathbf{I}_{AB} = \frac{210\angle 0°}{15\angle 36.87°} = \mathbf{14\angle -36.87°\ A}$$

$$\mathbf{I}_{BC} = \mathbf{I}_{AB}\angle -120° = \mathbf{14\angle -156.87°\ A}$$

$$\mathbf{I}_{CA} = \mathbf{I}_{AB}\angle 120° = \mathbf{14\angle 83.13°\ A}$$

The line currents are

$$\mathbf{I}_a = \mathbf{I}_{AB}\sqrt{3}\angle -30° = \mathbf{24.25\angle -66.87°\ A}$$

$$\mathbf{I}_b = \mathbf{I}_a\angle -120° = \mathbf{24.25\angle -186.87°\ A}$$

$$\mathbf{I}_c = \mathbf{I}_a\angle 120° = \mathbf{24.25\angle 53.13°\ A}$$

www.konkur.in

Chapter 12, Solution 21.

(a) $$\mathbf{I_{AC}} = \frac{-230\angle 120^\circ}{10+j8} = \frac{-230\angle 120^\circ}{12.806\angle 38.66^\circ} = \underline{17.96\angle -98.66^\circ\, A}$$

$$\mathbf{I_{AC} = 17.96\angle -98.66^\circ\ A}$$

(b) $$I_{bB} = I_{BC} + I_{BA} = I_{BC} - I_{AB} = \frac{230\angle -120}{10+j8} - \frac{230\angle 0^\circ}{10+j8}$$

$$= 17.96\angle -158.66^\circ - 17.96\angle -38.66^\circ$$

$$= -16.729 - j6.536 - 14.024 + j11.220 = -30.75 + j4.684$$

$$\mathbf{I_{bB} = 31.1\angle 171.34^\circ\ A}.$$

www.konkur.in

Chapter 12, Solution 22.

Convert the Δ-connected source to a Y-connected source.

$$\mathbf{V}_{an} = \frac{V_p}{\sqrt{3}}\angle -30° = \frac{440}{\sqrt{3}}\angle -30° = 254\angle -30°$$

Convert the Δ-connected load to a Y-connected load.

$$\mathbf{Z} = \mathbf{Z}_{\mathrm{Y}} \parallel \frac{\mathbf{Z}_{\Delta}}{3} = (4+\mathrm{j}6) \parallel (4-\mathrm{j}5) = \frac{(4+\mathrm{j}6)(4-\mathrm{j}5)}{8+\mathrm{j}}$$

$$\mathbf{Z} = 5.723 - \mathrm{j}0.2153$$

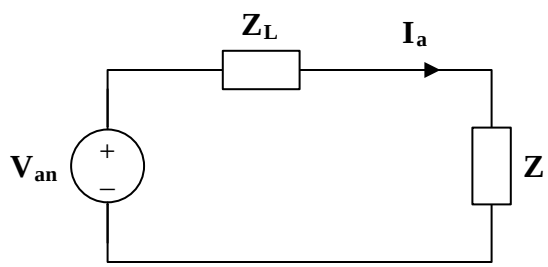

$$\mathbf{I}_a = \frac{\mathbf{V}_{an}}{\mathbf{Z}_L + \mathbf{Z}} = \frac{254\angle -30°}{7.723 - j0.2153} = \mathbf{32.88\angle{-28.4}^{\circ}\ A}$$

$$\mathbf{I}_{\mathrm{b}} = \mathbf{I}_{\mathrm{a}}\angle -120° = \mathbf{32.88\angle{-148.4}^{\circ}\ A}$$

$$\mathbf{I}_{\mathrm{c}} = \mathbf{I}_{\mathrm{a}}\angle 120° = \mathbf{32.88\angle 91.6^{\circ}\ A}$$

www.konkur.in

Chapter 12, Solution 23.

(a) $$I_{AB} = \frac{V_{AB}}{Z_{\Delta}} = \frac{202}{25\angle 60^o}$$

$$I_a = I_{AB}\sqrt{3}\angle -30^o = \frac{202\sqrt{3}\angle -30^o}{25\angle 60^o} = 13.995\angle -90^o$$

$$I_L = |I_a| = 13.995 \text{ A}$$

(b)

$$P = P_1 + P_2 = \sqrt{3}V_L I_L \cos\theta = \sqrt{3}(202)\left(\frac{202\sqrt{3}}{25}\right)\cos 60^o$$

$$= 2.448 \text{ kW}$$

www.konkur.in

Chapter 12, Solution 24.

Convert both the source and the load to their wye equivalents.

$$\mathbf{Z}_Y = \frac{\mathbf{Z}_\Delta}{3} = 20\angle 30° = 17.32 + j10$$

$$\mathbf{V}_{an} = \frac{\mathbf{V}_{ab}}{\sqrt{3}}\angle -30° = 240.2\angle 0°$$

We now use per-phase analysis.

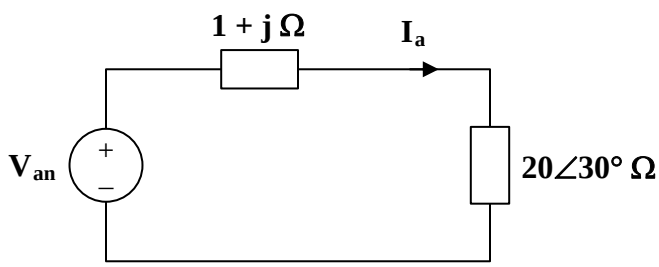

$$\mathbf{I}_a = \frac{\mathbf{V}_{an}}{(1+j)+(17.32+j10)} = \frac{240.2}{21.37\angle 31°} = \mathbf{11.24\angle -31°\ A}$$

$$\mathbf{I}_b = \mathbf{I}_a\angle -120° = \mathbf{11.24\angle -151°\ A}$$

$$\mathbf{I}_c = \mathbf{I}_a\angle 120° = \mathbf{11.24\angle 89°\ A}$$

But $\quad \mathbf{I}_a = \mathbf{I}_{AB}\sqrt{3}\angle -30°$

$$\mathbf{I}_{AB} = \frac{11.24\angle -31°}{\sqrt{3}\angle -30°} = \mathbf{6.489\angle -1°\ A}$$

$$\mathbf{I}_{BC} = \mathbf{I}_{AB}\angle -120° = \mathbf{6.489\angle -121°\ A}$$

$$\mathbf{I}_{CA} = \mathbf{I}_{AB}\angle 120° = \mathbf{6.489\angle 119°\ A}$$

www.konkur.in

Chapter 12, Solution 25.

Convert the delta-connected source to an equivalent wye-connected source and consider the single-phase equivalent.

$$\mathbf{I}_a = \frac{440\angle(10° - 30°)}{\sqrt{3}\,\mathbf{Z}_Y}$$

where $\mathbf{Z}_Y = 3 + j2 + 10 - j8 = 13 - j6 = 14.318\angle -24.78°$

$$\mathbf{I}_a = \frac{440\angle -20°}{\sqrt{3}\,(14.318\angle -24.78°)} \backslash = \mathbf{17.742\angle 4.78°\ amps}.$$

$$\mathbf{I_b = I_a\angle -120° = 17.742\angle -115.22°\ amps}.$$

$$\mathbf{I_c = I_a\angle +120° = 17.742\angle 124.78°\ amps}.$$

Chapter 12, Solution 26.

Using Fig. 12.55, design a problem to help other students to better understand balanced delta connected sources delivering power to balanced wye connected loads.

Although there are many ways to solve this problem, this is an example based on the same kind of problem asked in the third edition.

Problem

For the balanced circuit in Fig. 12.55, $\mathbf{V}_{ab} = 125\angle 0°$ V. Find the line currents $\mathbf{I}_{aA}$, $\mathbf{I}_{bB}$, and $\mathbf{I}_{cC}$.

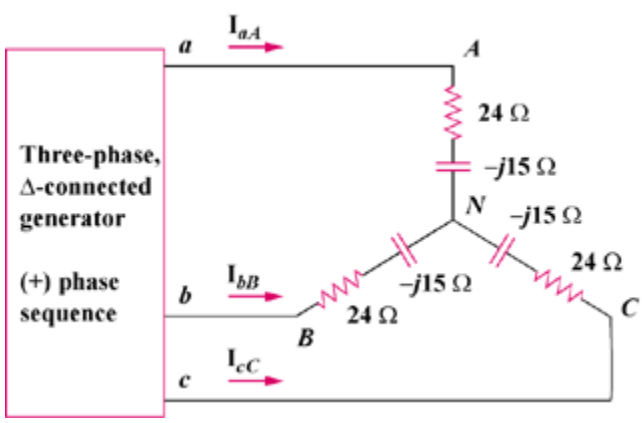

Figure 12.55

Solution

Transform the source to its wye equivalent.

$$\mathbf{V}_{an} = \frac{V_p}{\sqrt{3}}\angle -30° = 72.17\angle -30°$$

Now, use the per-phase equivalent circuit.

$$\mathbf{I}_{aA} = \frac{\mathbf{V}_{an}}{\mathbf{Z}}, \qquad \mathbf{Z} = 24 - j15 = 28.3\angle -32°$$

$$\mathbf{I}_{aA} = \frac{72.17\angle -30°}{28.3\angle -32°} = \mathbf{2.55\angle 2°\ A}$$

$$\mathbf{I}_{bB} = \mathbf{I}_{aA}\angle -120° = \mathbf{2.55\angle -118°\ A}$$

$$\mathbf{I}_{cC} = \mathbf{I}_{aA}\angle 120° = \mathbf{2.55\angle 122°\ A}$$

www.konkur.in

Chapter 12, Solution 27.

Since Z_L and Z_ℓ are in series, we can lump them together so that

$$Z_Y = 2 + j + 6 + j4 = 8 + j5$$

$$I_a = \frac{\frac{V_P}{\sqrt{3}} < -30^o}{Z_Y} = \frac{208 < -30^o}{\sqrt{3}(8 + j5)}$$

$$V_L = (6 + j4)I_a = \frac{208(0.866 - j0.5)(6 + j4)}{\sqrt{3}(8 + j5)} = 80.81 - j43.54$$

$|V_L| =$ **91.79 V**

www.konkur.in

Chapter 12, Solution 28.

$V_L = |V_{ab}| = 440 = \sqrt{3}V_P$ or $V_P = 440/1.7321 = 254$

For reference, let V_{AN} = **254∠0˚ V** which leads to
V_{BN} = **254∠–120˚ V** and V_{CN} = **254∠120˚ V**.

The line currents are found as follows,

$I_a = V_{AN}/Z_Y = 254/25\angle 30^\circ$ = **10.16∠–30˚ A**.
This leads to, I_b = **10.16∠–150˚ A** and I_c = **10.16∠90˚ A**.

www.konkur.in

Chapter 12, Solution 29.

We can replace the delta load with a wye load, $Z_Y = Z_\Delta/3 = 17+j15\Omega$.
The per-phase equivalent circuit is shown below.

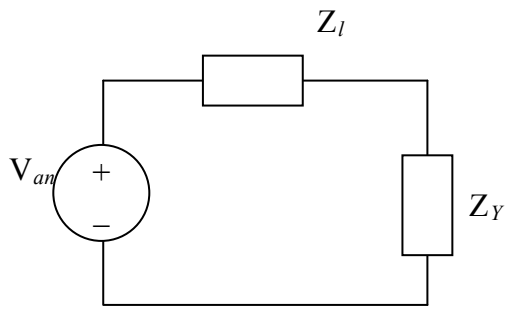

$\mathbf{I_a} = \mathbf{V_{an}}/|\mathbf{Z}_Y + \mathbf{Z}_l| = 240/|17+j15+0.4+j1.2| = 240/|17.4+j16.2| = 240/23.77 = 10.095$

$\mathbf{S} = 3[(I_a)^2(17+j15)] = 3x101.91(17+j15)$

$= \mathbf{[5.197+j4.586]\ kVA}$.

www.konkur.in

Chapter 12, Solution 30.

Since this a balanced system, we can replace it by a per-phase equivalent, as shown below.

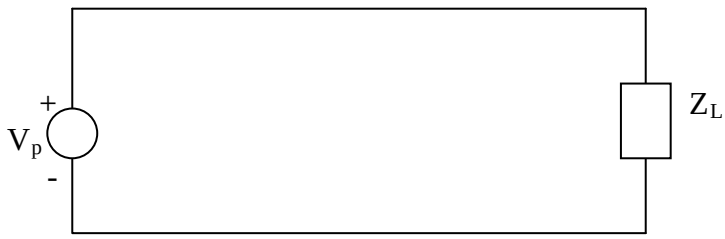

$$\overline{S} = 3\overline{S}_p = \frac{3V^2{}_p}{Z^*{}_p}, \qquad V_p = \frac{V_L}{\sqrt{3}}$$

$$\overline{S} = \frac{V^2{}_L}{Z^*{}_p} = \frac{(208)^2}{30\angle -45^o} = 1.4421\angle 45^o \text{ kVA}$$

$$\boldsymbol{P = S\cos\theta = \underline{1.02\,\text{kW}}}$$

www.konkur.in

Chapter 12, Solution 31.

(a)

$$P_p = 6{,}000, \qquad \cos\theta = 0.8, \qquad S_p = \frac{P_P}{\cos\theta} = 6/0.8 = 7.5\,\text{kVA}$$

$$Q_p = S_P \sin\theta = 4.5\,\text{kVAR}$$

$$\overline{S} = 3\overline{S}_p = 3(6 + j4.5) = 18 + j13.5\,\text{kVA}$$

For delta-connected load, $V_p = V_L = 240$ (rms). But

$$\overline{S} = \frac{3V^2{}_p}{Z^*{}_p} \longrightarrow Z^*{}_p = \frac{3V^2{}_p}{S} = \frac{3(240)^2}{(18 + j13.5)x10^3}, \qquad \underline{Z_P = [6.144 + j4.608]\Omega}$$

(b) $$P_p = \sqrt{3}V_L I_L \cos\theta \longrightarrow I_L = \frac{6000}{\sqrt{3}x240x0.8} = \underline{18.04\text{ A}}$$

(c) We find C to bring the power factor to unity

$$Q_c = Q_p = 4.5\,\text{kVA} \longrightarrow C = \frac{Q_c}{\omega V^2{}_{rms}} = \frac{4500}{2\pi x60x240^2} = \underline{207.2\,\mu\text{F}}$$

www.konkur.in

Chapter 12, Solution 32.

Design a problem to help other students to better understand power in a balanced three-phase system.

Although there are many ways to solve this problem, this is an example based on the same kind of problem asked in the third edition.

Problem

A balanced wye load is connected to a 60-Hz three-phase source with $V_{ab} = 240\angle 0^\circ$V. The load has lagging pf =0.5 and each phase draws 5 kW. (a) Determine the load impedance Z_Y. (b) Find I_a, I_b, and I_c.

Solution

(a) $|V_{ab}| = \sqrt{3}V_p = 240 \quad \longrightarrow \quad V_p = \dfrac{240}{\sqrt{3}} = 138.56$

$$V_{an} = V_p < -30^o$$

$$pf = 0.5 = \cos\theta \quad \longrightarrow \quad \theta = 60^o$$

$$P = S\cos\theta \quad \longrightarrow \quad S = \frac{P}{\cos\theta} = \frac{5}{0.5} = 10 \text{ kVA}$$

$$Q = S\sin\theta = 10\sin 60 = 8.66$$

$$S_p = 5 + j8.66 \text{ kVA}$$

But

$$S_P = \frac{V_p^2}{Z_p^*} \quad \longrightarrow \quad Z_p^* = \frac{V_p^2}{S_p} = \frac{138.56^2}{(5 + j8.66)x10^3} = 0.96 - j1.663$$

$\mathbf{Z_p = [0.96 + j1.663]\ \Omega}$

(b) $I_a = \dfrac{V_{an}}{Z_Y} = \dfrac{138.56 < -30^o}{0.96 + j1.6627} = \underline{72.17 < -90^o \quad \text{A}}$ = **72.17∠–90° A**

$I_b = I_a < -120^o = \underline{72.17 < -210^o \quad \text{A}}$ = **72.17∠150° A**

$I_c = I_a < +120^o = \underline{72.17 < 30^o \quad \text{A}}$ = **72.17∠30° A**

www.konkur.in

www.konkur.in

Chapter 12, Solution 33.

$$\mathbf{S} = \sqrt{3}\, V_L I_L \angle\theta$$

$$S = |\mathbf{S}| = \sqrt{3}\, V_L I_L$$

For a Y-connected load,

$$I_L = I_p, \qquad V_L = \sqrt{3}\, V_p$$

$$S = 3 V_p I_p$$

$$I_L = I_p = \frac{S}{3V_p} = \frac{4800}{(3)(208)} = \mathbf{7.69\ A}$$

$$V_L = \sqrt{3}\, V_p = \sqrt{3} \times 208 = \mathbf{360.3\ V}$$

www.konkur.in

Chapter 12, Solution 34.

$$V_p = \frac{V_L}{\sqrt{3}} = \frac{220}{\sqrt{3}}$$

$$\mathbf{I}_a = \frac{V_p}{\mathbf{Z}_Y} = \frac{220}{\sqrt{3}(10 - j16)} = \frac{127.02}{18.868\angle -58°} = 6.732\angle 58°$$

$$I_L = I_p = \mathbf{6.732A}$$

$$\mathbf{S} = \sqrt{3}\, V_L I_L \angle\theta = \sqrt{3} \times 220 \times 6.732\angle -58° = 2565\angle -58°$$

S = [1.3592–j2.175] kVA

www.konkur.in

Chapter 12, Solution 35.

(a) This is a balanced three-phase system and we can use per phase equivalent circuit. The delta-connected load is converted to its wye-connected equivalent

$$Z''_y = \frac{1}{3} Z_\Delta = (60 + j30)/3 = 20 + j10$$

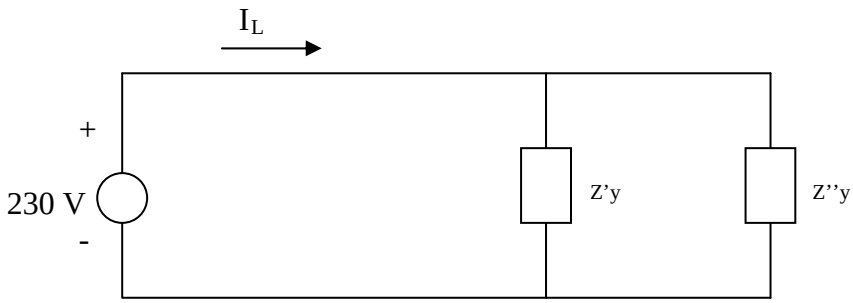

$$Z_y = Z'_y // Z''_y = (40 + j10)//(20 + j10) = 13.5 + j5.5$$

$$\mathbf{I_L = \frac{230}{13.5 + j5.5} = [14.61 - j5.953]\ A}$$

(b) $\mathbf{S = 3V_s I^*_L = [10.081 + j4.108]\ kVA}$

(c) pf = P/S = **0.9261**

www.konkur.in

Chapter 12, Solution 36.

(a) S = 1 [0.75 + sin(cos^{-1}0.75)] = **0.75 + j0.6614 MVA**

(b) $\overline{S} = 3V_p I^*_p \longrightarrow I^*_p = \dfrac{S}{3V_p} = \dfrac{(0.75 + j0.6614)x10^6}{3x4200} = 59.52 + j52.49$

$$\boldsymbol{P_L = |I_p|^2 R_l = (79.36)^2(4) = \underline{25.19\,\text{kW}}}$$

(c) $\boldsymbol{V_s = V_L + I_p(4 + j) = 4.4381 - j0.21\,\text{kV} = \underline{4.443\angle -2.709^o\ \text{kV}}}$

www.konkur.in

Chapter 12, Solution 37.

$$S = \frac{P}{pf} = \frac{12}{0.6} = 20$$

$$\mathbf{S} = S\angle\theta = 20\angle\theta = 12 - j16 \text{ kVA}$$

But $\quad \mathbf{S} = \sqrt{3}\, V_L I_L \angle\theta$

$$I_L = \frac{20 \times 10^3}{\sqrt{3} \times 208} = \mathbf{55.51\ A}$$

$$\mathbf{S} = 3\left|\mathbf{I}_p\right|^2 \mathbf{Z}_p$$

For a Y-connected load, $I_L = I_p$.

$$\mathbf{Z}_p = \frac{\mathbf{S}}{3\left|I_L\right|^2} = \frac{(12 - j16) \times 10^3}{(3)(55.51)^2}$$

$$\mathbf{Z}_p = \mathbf{[1.298 - \mathit{j}1.731]\ \Omega}$$

www.konkur.in

Chapter 12, Solution 38.

As a balanced three-phase system, we can use the per-phase equivalent shown below.

$$\mathbf{I}_a = \frac{110\angle 0°}{(1+j2)+(9+j12)} = \frac{110\angle 0°}{10+j14}$$

$$\mathbf{S}_p = |\mathbf{I}_a|^2 \mathbf{Z}_Y = \frac{(110)^2}{(10^2+14^2)} \cdot (9+j12)$$

The complex power is

$$\mathbf{S} = 3\mathbf{S}_p = 3\frac{(110)^2}{296} \cdot (9+j12)$$

S = (1.1037+j1.4716) kVA

www.konkur.in

Chapter 12, Solution 39.

Consider the system shown below.

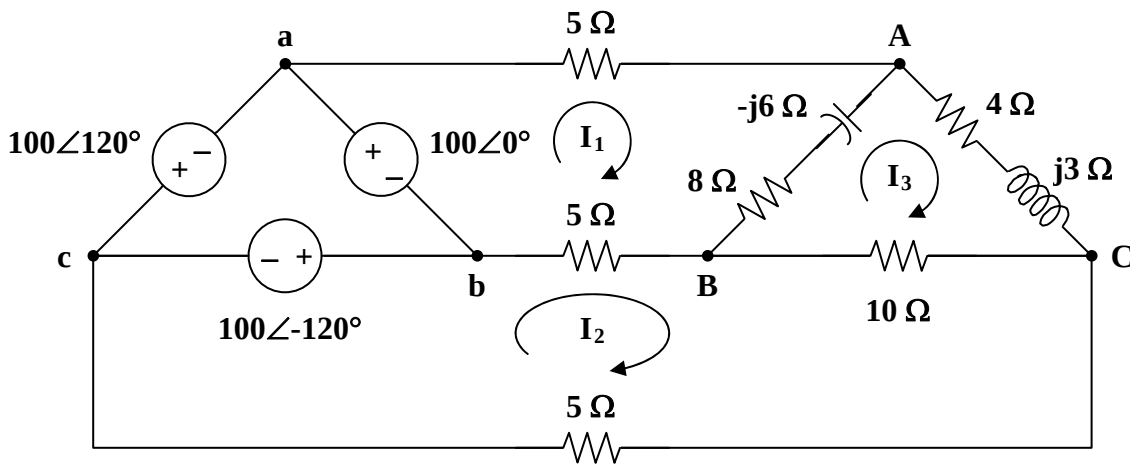

For mesh 1,

$$100 = (18 - j6)\mathbf{I}_1 - 5\mathbf{I}_2 - (8 - j6)\mathbf{I}_3 \qquad (1)$$

For mesh 2,

$$100\angle -120° = 20\mathbf{I}_2 - 5\mathbf{I}_1 - 10\mathbf{I}_3$$

$$20\angle -120° = -\mathbf{I}_1 + 4\mathbf{I}_2 - 2\mathbf{I}_3 \qquad (2)$$

For mesh 3,

$$0 = -(8 - j6)\mathbf{I}_1 - 10\mathbf{I}_2 + (22 - j3)\mathbf{I}_3 \qquad (3)$$

To eliminate $\mathbf{I}_2$, start by multiplying (1) by 2,

$$200 = (36 - j12)\mathbf{I}_1 - 10\mathbf{I}_2 - (16 - j12)\mathbf{I}_3 \qquad (4)$$

Subtracting (3) from (4),

$$200 = (44 - j18)\mathbf{I}_1 - (38 - j15)\mathbf{I}_3 \qquad (5)$$

Multiplying (2) by $5/4$,

$$25\angle -120° = -1.25\mathbf{I}_1 + 5\mathbf{I}_2 - 2.5\mathbf{I}_3 \qquad (6)$$

Adding (1) and (6),

$$87.5 - j21.65 = (16.75 - j6)\mathbf{I}_1 - (10.5 - j6)\mathbf{I}_3 \qquad (7)$$

In matrix form, (5) and (7) become

www.konkur.in

$$\begin{bmatrix} 200 \\ 87.5 - j12.65 \end{bmatrix} = \begin{bmatrix} 44 - j18 & -38 + j15 \\ 16.75 - j6 & -10.5 + j6 \end{bmatrix} \begin{bmatrix} \mathbf{I}_1 \\ \mathbf{I}_3 \end{bmatrix}$$

$$\Delta = 192.5 - j26.25, \quad \Delta_1 = 900.25 - j935.2, \quad \Delta_3 = 110.3 - j1327.6$$

$$\mathbf{I}_1 = \frac{\Delta_1}{\Delta} = \frac{1298.1\angle -46.09^\circ}{194.28\angle -7.76^\circ} = 6.682\angle -38.33^\circ = 5.242 - j4.144$$

$$\mathbf{I}_3 = \frac{\Delta_3}{\Delta} = \frac{1332.2\angle -85.25^\circ}{194.28\angle -7.76^\circ} = 6.857\angle -77.49^\circ = 1.485 - j6.694$$

We obtain $\mathbf{I}_2$ from (6),

$$\mathbf{I}_2 = 5\angle -120^\circ + \frac{1}{4}\mathbf{I}_1 + \frac{1}{2}\mathbf{I}_3$$
$$\mathbf{I}_2 = (-2.5 - j4.33) + (1.3104 - j1.0359) + (0.7425 - j3.347)$$
$$\mathbf{I}_2 = -0.4471 - j8.713$$

The average power absorbed by the 8-Ω resistor is

$$P_1 = |\mathbf{I}_1 - \mathbf{I}_3|^2 (8) = |3.756 + j2.551|^2 (8) = 164.89 \text{ W}$$

The average power absorbed by the 4-Ω resistor is

$$P_2 = |\mathbf{I}_3|^2 (4) = (6.8571)^2 (4) = 188.1 \text{ W}$$

The average power absorbed by the 10-Ω resistor is

$$P_3 = |\mathbf{I}_2 - \mathbf{I}_3|^2 (10) = |-1.9321 - j2.019|^2 (10) = 78.12 \text{ W}$$

Thus, the total real power absorbed by the load is

$$P = P_1 + P_2 + P_3 = \mathbf{431.1\ W}$$

www.konkur.in

Chapter 12, Solution 40.

Transform the delta-connected load to its wye equivalent.

$$\mathbf{Z}_Y = \frac{\mathbf{Z}_\Delta}{3} = 7 + j8$$

Using the per-phase equivalent circuit above,

$$\mathbf{I}_a = \frac{100\angle 0°}{(1 + j0.5) + (7 + j8)} = 8.567\angle -46.75°$$

For a wye-connected load,

$$I_p = I_a = \left|\mathbf{I}_a\right| = 8.567$$

$$\mathbf{S} = 3\left|\mathbf{I}_p\right|^2 \mathbf{Z}_p = (3)(8.567)^2(7 + j8)$$

$$P = \mathrm{Re}(\mathbf{S}) = (3)(8.567)^2(7) = \mathbf{1.541\ kW}$$

www.konkur.in

Chapter 12, Solution 41.

$$S = \frac{P}{pf} = \frac{5\text{ kW}}{0.8} = 6.25\text{ kVA}$$

But $\quad S = \sqrt{3}\,V_L I_L$

$$I_L = \frac{S}{\sqrt{3}\,V_L} = \frac{6.25\times10^3}{\sqrt{3}\times400} = \mathbf{9.021\ A}$$

www.konkur.in

Chapter 12, Solution 42.

The load determines the power factor.

$$\tan\theta = \frac{40}{30} = 1.333 \quad \longrightarrow \quad \theta = -53.13°$$

$$\text{pf} = \cos\theta = 0.6 \quad \text{(leading)}$$

$$\mathbf{S} = 7.2 - j\left(\frac{7.2}{0.6}\right)(0.8) = 7.2 - j9.6 \text{ kVA}$$

But $\quad \mathbf{S} = 3\left|\mathbf{I}_p\right|^2 \mathbf{Z}_p$

$$\left|\mathbf{I}_p\right|^2 = \frac{\mathbf{S}}{3\mathbf{Z}_p} = \frac{(7.2 - j9.6)\times 10^3}{(3)(30 - j40)} = 80$$

$$\mathrm{I}_p = 8.944 \text{ A}$$

$$I_L = \mathrm{I}_p = \mathbf{8.944\ A}$$

$$V_L = \frac{\mathrm{S}}{\sqrt{3}\,\mathrm{I}_L} = \frac{12\times 10^3}{\sqrt{3}\,(8.944)} = \mathbf{774.6\ V}$$

www.konkur.in

Chapter 12, Solution 43.

$$\mathbf{S} = 3\left|\mathbf{I}_p\right|^2 \mathbf{Z}_p, \qquad I_p = I_L \text{ for Y-connected loads}$$

$$\mathbf{S} = (3)(13.66)^2(7.812 - j2.047)$$

$$\mathbf{S} = \mathbf{[4.373 - \mathit{j}1.145]}\ \boldsymbol{kVA}$$

www.konkur.in

Chapter 12, Solution 44.

For a Δ-connected load,

$$V_p = V_L, \qquad I_L = \sqrt{3}\, I_p$$

$$S = \sqrt{3}\, V_L I_L$$

$$I_L = \frac{S}{\sqrt{3}\, V_L} = \frac{\sqrt{(12^2 + 5^2)} \times 10^3}{\sqrt{3}\,(240)} = 31.273$$

At the source,

$$\mathbf{V_L^{'} = V_L + I_L Z_l + I_L Z_l}$$

$$\mathbf{V}_L^{'} = 240\angle 0° + 2(31.273)(1 + j3) = 240+62.546+j187.638$$

$$\mathbf{V}_L^{'} = 302.546+j187.638 = 356\angle 31.81°$$

$$\left| \mathbf{V}_L^{'} \right| = \mathbf{356\ V}$$

Also, at the source,

S' = $3(31.273)^2(1+j3) + (12{,}000+j5{,}000) = 2{,}934+12{,}000+j(8{,}802+5{,}000)$

$= 14{,}934+j13{,}802 = 20{,}335\angle 42.744°$ thus, $\theta = 42.744°$.

pf = cos(42.744°) = **0.7344**

Checking, $V_Y = 240/1.73205 = 138.564$, $\mathbf{S} = 3(138.564)^2/(Z_Y)^* = 12{,}000+l5{,}000$, and Z_Y

$= 57{,}600/(12{,}000–j5{,}000) = 57.6/(13\angle–22.62°) = 4.4308\angle 22.62° = 4.09+j1.70416$. The

total load seen by the source is $1+j3+4.09+j1.70416 = 5.09+j4.70416 = 6.9309\angle 42.74°$

per phase. This leads to $\theta = \mathrm{Tan}^{-1}(4.70416/5.09) = \mathrm{Tan}^{-1}(0.9242) = 42.744°$. Clearly, the answer checks. $I_l = 138.564/4.4308 = 31.273$ A. Again the answer checks. Finally,

www.konkur.in

$3(31.273)^2(5.09+j4.70416) = 2{,}934(6.9309\angle 42.74°) = 20{,}335\angle 42.74°$, the same as we calculated above.

www.konkur.in

Chapter 12, Solution 45.

$$\mathbf{S} = \sqrt{3}\, V_L I_L \angle\theta$$

$$I_L = \frac{|\mathbf{S}|\angle -\theta}{\sqrt{3}\, V_L}, \qquad |\mathbf{S}| = \frac{P}{pf} = \frac{450\times 10^3}{0.708} = 635.6 \text{ kVA}$$

$$\mathbf{I}_L = \frac{(635.6)\angle -\theta}{\sqrt{3}\times 440} = 834\angle -45° \text{ A}$$

At the source,

$$\mathbf{V}_L = 440\angle 0° + \mathbf{I}_L\,(0.5 + j2)$$
$$\mathbf{V}_L = 440 + (834\angle -45°)(2.062\angle 76°)$$
$$\mathbf{V}_L = 440 + 1719.7\angle 31°$$
$$\mathbf{V}_L = 1914.1 + j885.7$$

$$\mathbf{V}_L = \mathbf{2.109\angle 24.83°\ V}$$

www.konkur.in

Chapter 12, Solution 46.

For the wye-connected load,

$$I_L = I_p, \qquad V_L = \sqrt{3}\,V_p \qquad I_p = V_p / \mathbf{Z}$$

$$\mathbf{S} = 3\mathbf{V}_p\mathbf{I}_p^* = \frac{3\left|\mathbf{V}_p\right|^2}{\mathbf{Z}^*} = \frac{3\left|\mathbf{V}_L/\sqrt{3}\right|^2}{\mathbf{Z}^*}$$

$$\mathbf{S} = \frac{\left|\mathbf{V}_L\right|^2}{\mathbf{Z}^*} = \frac{(110)^2}{100} = 121\text{ W}$$

For the delta-connected load,

$$V_p = V_L, \qquad I_L = \sqrt{3}\,I_p, \qquad I_p = V_p / \mathbf{Z}$$

$$\mathbf{S} = 3\mathbf{V}_p\mathbf{I}_p^* = \frac{3\left|\mathbf{V}_p\right|^2}{\mathbf{Z}^*} = \frac{3\left|\mathbf{V}_L\right|^2}{\mathbf{Z}^*}$$

$$\mathbf{S} = \frac{(3)(110)^2}{100} = 363\text{ W}$$

This shows that the **delta-connected load** will absorb three times more average power than the wye-connected load using the same elements.. This is also evident from $\mathbf{Z}_Y = \dfrac{\mathbf{Z}_\Delta}{3}$.

www.konkur.in

Chapter 12, Solution 47.

$$\text{pf} = 0.8 \quad \text{(lagging)} \quad \longrightarrow \quad \theta = \cos^{-1}(0.8) = 36.87°$$
$$\mathbf{S}_1 = 250\angle 36.87° = 200 + j150 \text{ kVA}$$

$$\text{pf} = 0.95 \quad \text{(leading)} \quad \longrightarrow \quad \theta = \cos^{-1}(0.95) = -18.19°$$
$$\mathbf{S}_2 = 300\angle -18.19° = 285 - j93.65 \text{ kVA}$$

$$\text{pf} = 1.0 \quad \longrightarrow \quad \theta = \cos^{-1}(1) = 0°$$
$$\mathbf{S}_3 = 450 \text{ kVA}$$

$$\mathbf{S}_T = \mathbf{S}_1 + \mathbf{S}_2 + \mathbf{S}_3 = 935 + j56.35 = 936.7\angle 3.45° \text{ kVA}$$

$$\left|\mathbf{S}_T\right| = \sqrt{3}\, V_L I_L$$

$$I_L = \frac{936.7 \times 10^3}{\sqrt{3}\,(13.8 \times 10^3)} = \mathbf{39.19\ A\ rms}$$

$$\text{pf} = \cos\theta = \cos(3.45°) = \mathbf{0.9982} \quad \textbf{(lagging)}$$

www.konkur.in

Chapter 12, Solution 48.

(a) We first convert the delta load to its equivalent wye load, as shown below.

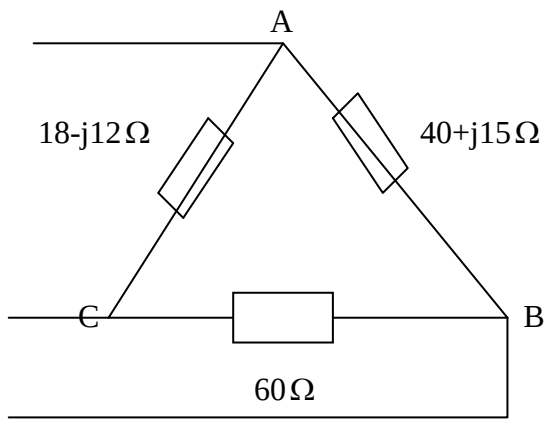

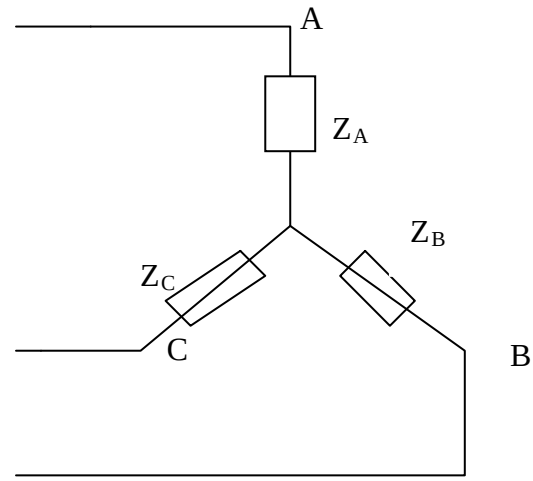

$$Z_A = \frac{(40+j15)(18-j12)}{118+j3} = 7.577 - j1.923$$

$$Z_B = \frac{60(40+j15).}{118+j3} = 20.52 + j7.105$$

$$Z_C = \frac{60(18-j12)}{118+j3} = 8.992 - j6.3303$$

The system becomes that shown below.

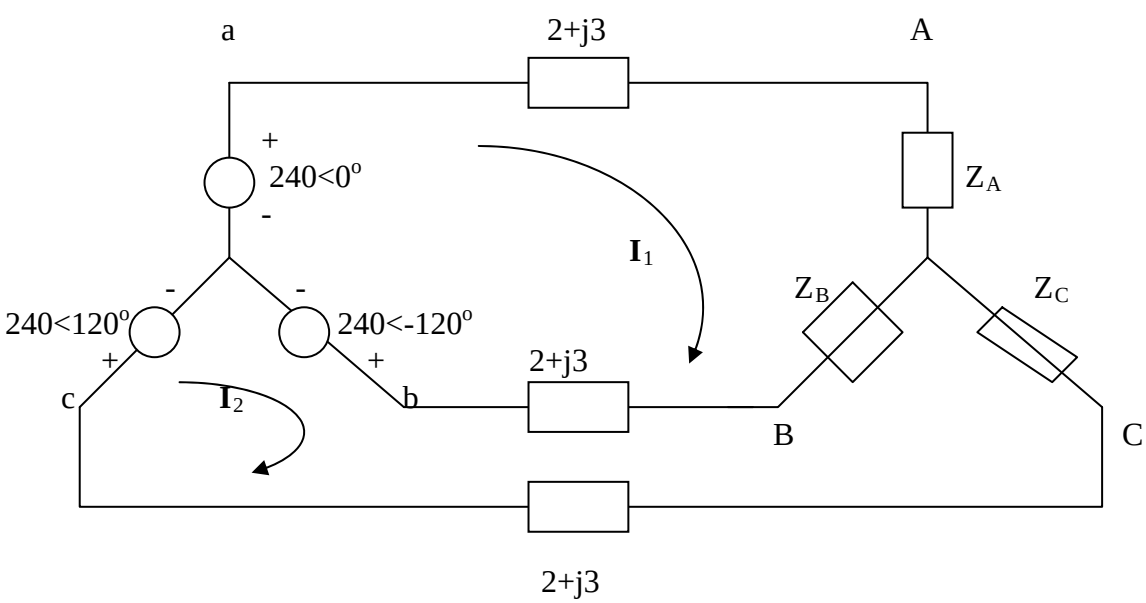

We apply KVL to the loops. For mesh 1,

www.konkur.in

$$-240 + 240\angle -120^o + I_1(2Z_l + Z_A + Z_B) - I_2(Z_B + Z_l) = 0$$

or

$$(32.097 + j11.13)I_1 - (22.52 + j10.105)I_2 = 360 + j207.85 \qquad (1)$$

For mesh 2,

$$240\angle 120^o - 240\angle -120^o - I_1(Z_B + Z_l) + I_2(2Z_l + Z_B + Z_C) = 0$$

or

$$-(22.52 + j10.105)I_1 + (33.51 + j6.775)I_2 = -j415.69 \qquad (2)$$

Solving (1) and (2) gives

$I_1 = 23.75 - j5.328, \qquad I_2 = 15.165 - j11.89$

$$\boldsymbol{I_{aA} = I_1 = \underline{24.34\angle -12.64^o\ \text{A}}, \qquad I_{bB} = I_2 - I_1 = \underline{10.81\angle -142.6^o\ \text{A}}}$$

$$\boldsymbol{I_{cC} = -I_2 = \underline{19.27\angle 141.9^o\ \text{A}}}$$

(b) $\mathbf{S_a = (240\angle 0^o)(24.34\angle 12.64^o) = 5841.6\angle 12.64^o}$

$\mathbf{S_b = (240\angle -120^o)(10.81\angle 142.6^o) = 2594.4\angle 22.6^o}$

$\mathbf{S_c = (240\angle 120^o)(19.27\angle -141.9^o) = 4624.8\angle -21.9^o}$

$\mathbf{S = S_a + S_b + S_c = 12.386 + j0.55\ \text{kVA} = \underline{12.4\angle 2.54^o\ \text{kVA}}}$

www.konkur.in

Chapter 12, Solution 49.

(a) For the delta-connected load, $Z_p = 20 + j10\Omega$, $V_p = V_L = 220$ (rms),

$$S = \frac{3V^2{}_p}{Z^*{}_p} = \frac{3x220^2}{(20 - j10)} = 5808 + j2904 = \underline{6.943\angle 26.56^o \text{ kVA}}$$

P = **5.808 kW**

(b) For the wye-connected load, $Z_p = 20 + j10\Omega$, $V_p = V_L / \sqrt{3}$,

$$S = \frac{3V^2{}_p}{Z^*{}_p} = \frac{3x220^2}{3(20 - j10)} = \underline{2.164\angle 26.56^o \text{ kVA}}$$

P = **1.9356 kW**

www.konkur.in

Chapter 12, Solution 50.

$\overline{S} = \overline{S}_1 + \overline{S}_2 = 8(0.6 + j0.8) = 4.8 + j6.4\,\text{kVA}, \qquad \overline{S}_1 = 3\,\text{kVA}$

Hence,

$\overline{S}_2 = \overline{S} - \overline{S}_1 = 1.8 + j6.4\,\text{kVA}$

But $\overline{S}_2 = \dfrac{3V^2{}_p}{Z^*{}_p}, \quad V_p = \dfrac{V_L}{\sqrt{3}} \quad \longrightarrow \quad \overline{S}_2 = \dfrac{.V^2{}_L}{Z^*{}_p}$

$$\boldsymbol{Z^*{}_p = \frac{V^*{}_L}{\overline{S}_2} = \frac{240^2}{(1.8 + j6.4)x10^3} \quad \longrightarrow \quad \underline{Z_p = 2.346 + j8.34\Omega}}$$

www.konkur.in

Chapter 12, Solution 51.

This is an unbalanced system.

$$I_{AB} = \frac{240 < 0^o}{Z_1} = \frac{240 < 0^o}{8 + j6} = \underline{19.2\text{-j}14.4 \ \ \text{A}}$$

$$\mathrm{I_{BC}} = \frac{240\angle 120°}{\mathrm{Z_2}} = \frac{240\angle 120°}{4.7413\angle -27.65} = 50.62\angle 147.65^\circ = \mathbf{[-42.76+j27.09]\ A}$$

$$\mathrm{I_{CA}} = \frac{240\angle -120°}{\mathrm{Z_3}} = \frac{240\angle -120°}{10} = \mathbf{[-12-j20.78]\ A}$$

At node A,

$$I_{aA} = I_{AB} - I_{CA} = (19.2 - j14.4) - (-12 - j20.78) = \underline{31.2 + j6.38 \text{ A}}$$

$$\mathrm{I}_{bB} = I_{BC} - I_{AB} = (-42.76 + j27.08) - (19.2 - j14.4) = \underline{-61.96 + j41.48 \text{ A}}$$

$$\mathrm{I}_{cC} = I_{CA} - I_{BC} = (-12 - j20.78) - (-42.76 + j27.08) = \underline{30.76 - j47.86 \ \ \text{A}}$$

www.konkur.in

Chapter 12, Solution 52.

Since the neutral line is present, we can solve this problem on a per-phase basis.

$$\mathbf{I}_a = \frac{\mathbf{V}_{an}}{\mathbf{Z}_{AN}} = \frac{120\angle 120°}{20\angle 60°} = 6\angle 60°$$

$$\mathbf{I}_b = \frac{\mathbf{V}_{bn}}{\mathbf{Z}_{BN}} = \frac{120\angle 0°}{30\angle 0°} = 4\angle 0°$$

$$\mathbf{I}_c = \frac{\mathbf{V}_{cn}}{\mathbf{Z}_{CN}} = \frac{120\angle -120°}{40\angle 30°} = 3\angle -150°$$

Thus,

$$-\mathbf{I}_n = \mathbf{I}_a + \mathbf{I}_b + \mathbf{I}_c$$

$$-\mathbf{I}_n = 6\angle 60° + 4\angle 0° + 3\angle -150°$$

$$-\mathbf{I}_n = (3 + j5.196) + (4) + (-2.598 - j1.5)$$

$$-\mathbf{I}_n = 4.405 + j3.696 = 5.75\angle 40°$$

$$\mathbf{I}_n = \mathbf{5.75\angle 220°\ A}$$

www.konkur.in

Chapter 12, Solution 53.

Using Fig. 12.61, design a problem that will help other students to better understand unbalanced three-phase systems.

Although there are many ways to solve this problem, this is an example based on the same kind of problem asked in the third edition.

Problem

In the wye-wye system shown in Fig. 12.61, loads connected to the source are unbalanced. (a) Calculate I_a, I_b, and I_c. (b) Find the total power delivered to the load. Take V_P = 240 V rms.

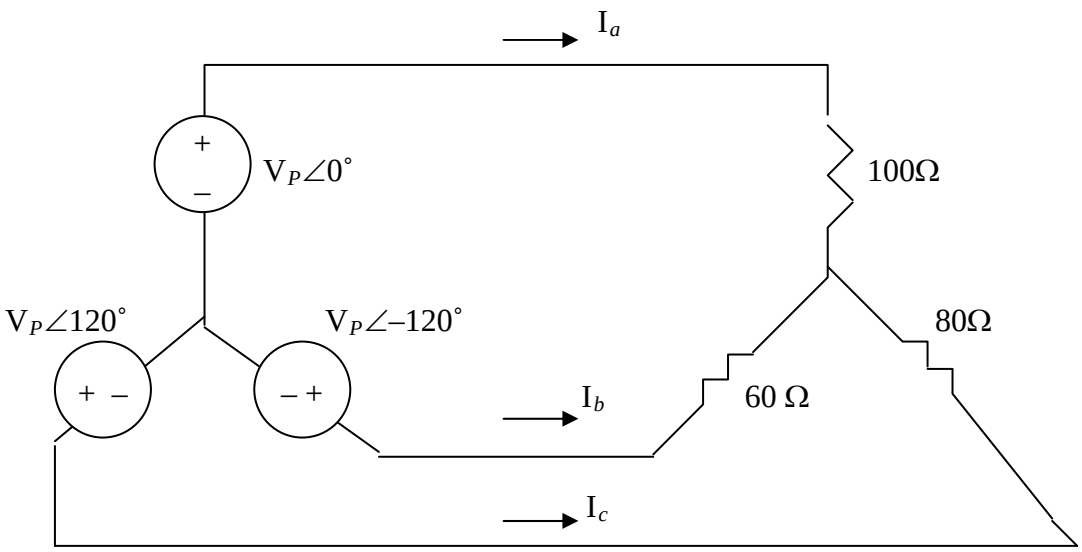

Figure 12.61 For Prob. 12.53.

Solution

Applying mesh analysis as shown below, we get.

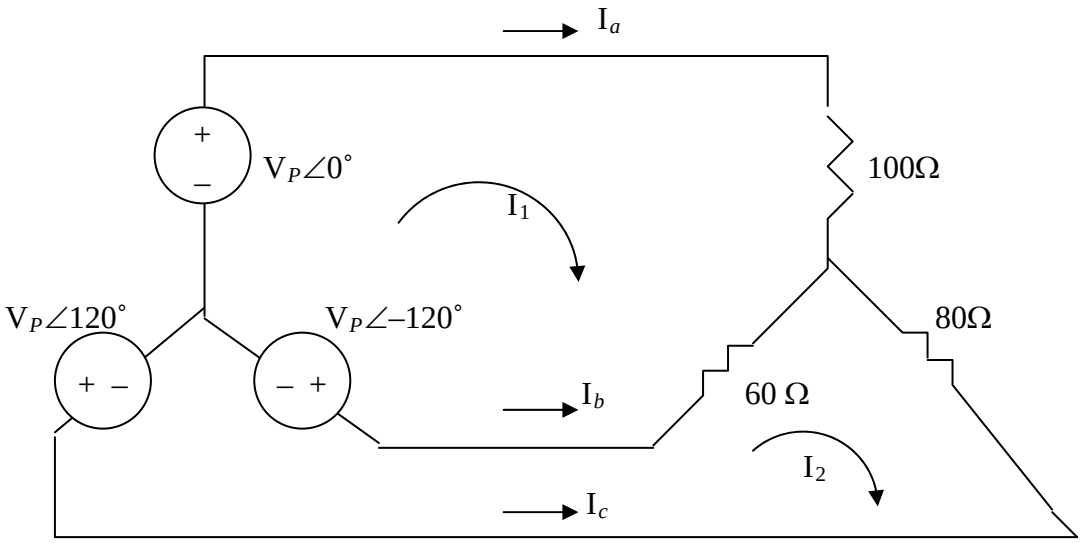

$240\angle -120^\circ - 240 + 160\mathbf{I_1} - 60\mathbf{I_2} = 0$ or $160\mathbf{I_1} - 60\mathbf{I_2} = 360+j207.84$ (1)

$240\angle 120^\circ - 240\angle -120^\circ - 60\mathbf{I_1} + 140\mathbf{I_2} = 0$ or $-60\mathbf{I_1} + 140\mathbf{I_2} = -j415.7$ (2)

In matrix form, (1) and (2) become

$$\begin{bmatrix} 160 & -60 \\ -60 & 140 \end{bmatrix}\begin{bmatrix} I_1 \\ I_2 \end{bmatrix} = \begin{bmatrix} 360 + j207.84 \\ -j415.7 \end{bmatrix}$$

Using MATLAB, we get,

```
>> Z=[160,-60;-60,140]
Z =
   160   -60
   -60   140
>> V=[(360+207.8i);-415.7i]
V =
  1.0e+002 *
   3.6000 + 2.0780i
        0 - 4.1570i
>> I=inv(Z)*V
I =
   2.6809 + 0.2207i
   1.1489 - 2.8747i
```

www.konkur.in

$I_1 = 2.681+j0.2207$ and $I_2 = 1.1489–j2.875$

$$I_a = I_1 = \mathbf{2.69\angle 4.71^\circ\ A}$$

$$I_b = I_2 - I_1 = -1.5321-j3.096 = \mathbf{3.454\angle -116.33^\circ\ A}$$

$$I_c = -I_2 = \mathbf{3.096\angle 111.78^\circ\ A}$$

$$S_a = |I_a|^2 Z_a = (2.69)^2 x100 = 723.61$$
$$S_b = |I_b|^2 Z_b = (3.454)^2 x60 = 715.81$$
$$S_c = |I_c|^2 Z_c = (3.0957)^2 x80 = 766.67$$

$$S = S_a + S_b + S_c = \underline{2.205\ \text{kVA}}$$

www.konkur.in

Chapter 12, Solution 54.

Consider the load as shown below.

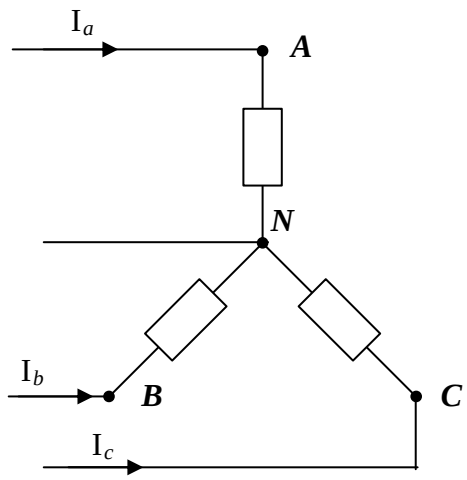

$$I_a = \frac{210 < 0^o}{80} = \underline{2.625 \text{ A}}$$

$$\mathrm{I_b} = \frac{210\angle 0°}{60 + \mathrm{j}90} = \frac{210}{108.17\angle 56.31°} = \mathbf{1.9414\angle –56.31° \ A}$$

$$I_c = \frac{210 < 0^o}{j80} = \underline{2.625 < -90^o \text{ A}}$$

$$S_a = VI_a^* = 210x2.625 = 551.25$$

$$S_b = VI_b^* = \frac{|V|^2}{Z_b^*} = \frac{210^2}{60 - j90} = 226.15 + j339.2$$

$$S_c = \frac{|V|^2}{Z_c^*} = \frac{210^2}{-j80} = j551.25$$

$$S = S_a + S_b + S_c = \underline{777.4 + j890.45 \text{ VA}}$$

www.konkur.in

Chapter 12, Solution 55.

The phase currents are:

$$I_{AB} = 240/j25 = \mathbf{9.6\angle{-90^\circ}\ A}$$

$$I_{CA} = 240\angle 120^\circ/40 = \mathbf{6\angle 120^\circ\ A}$$

$$I_{BC} = 240\angle{-120^\circ}/30\angle 30^\circ = \mathbf{8\angle{-150^\circ}\ A}$$

The complex power in each phase is:

$$S_{AB} = |I_{AB}|^2 Z_{AB} = (9.6)^2 j25 = j2304$$

$$S_{AC} = |I_{AC}|^2 Z_{AC} = (6)^2 40 < 0^o = 1440$$

$$S_{BC} = |I_{BC}|^2 Z_{BC} = (8)^2 30 < 30^o = 1662.77 + j960$$

The total complex power is

$$S = S_{AB} + S_{AC} + S_{BC} = \underline{3102.77 + j3264 \text{ VA}}$$

$$= \mathbf{[3.103+j3.264]\ kVA}$$

Chapter 12, Solution 56.

Using Fig. 12.63, design a problem to help other students to better understand unbalanced three-phase systems.

Although there are many ways to solve this problem, this is an example based on the same kind of problem asked in the third edition.

Problem

Refer to the unbalanced circuit of Fig. 12.63. Calculate:

(a) the line currents

(b) the real power absorbed by the load

(c) the total complex power supplied by the source

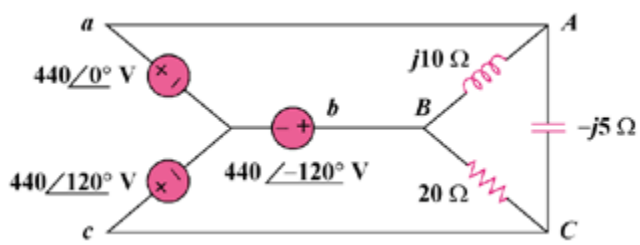

Figure 12.63

Solution

(a) Consider the circuit below.

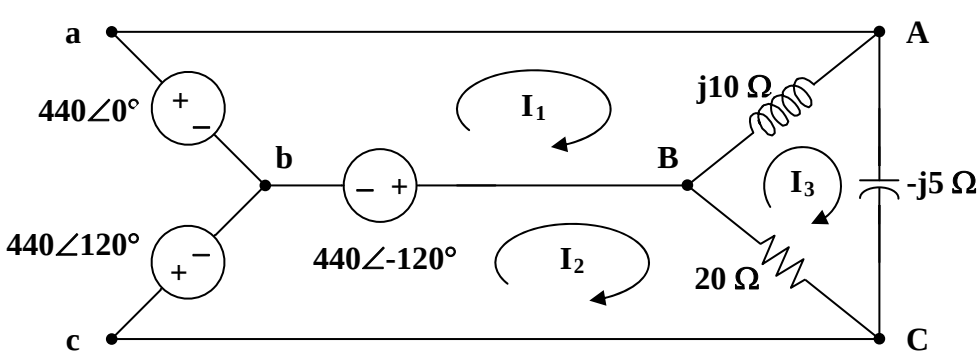

For mesh 1,

$$440\angle -120° - 440\angle 0° + j10(\mathbf{I}_1 - \mathbf{I}_3) = 0$$

www.konkur.in

$$\mathbf{I}_1 - \mathbf{I}_3 = \frac{(440)(1.5 + j0.866)}{j10} = 76.21\angle -60° \qquad (1)$$

For mesh 2,

$$440\angle 120° - 440\angle -120° + 20(\mathbf{I}_2 - \mathbf{I}_3) = 0$$

$$\mathbf{I}_3 - \mathbf{I}_2 = \frac{(440)(j1.732)}{20} = j38.1 \qquad (2)$$

For mesh 3,

$$j10(\mathbf{I}_3 - \mathbf{I}_1) + 20(\mathbf{I}_3 - \mathbf{I}_2) - j5\mathbf{I}_3 = 0$$

Substituting (1) and (2) into the equation for mesh 3 gives,

$$\mathbf{I}_3 = \frac{(440)(-1.5 + j0.866)}{j5} = 152.42\angle 60° \qquad (3)$$

From (1),

$$\mathbf{I}_1 = \mathbf{I}_3 + 76.21\angle -60° = 114.315 + j66 = 132\angle 30°$$

From (2),

$$\mathbf{I}_2 = \mathbf{I}_3 - j38.1 = 76.21 + j93.9 = 120.93\angle 50.94°$$

$$\mathbf{I}_a = \mathbf{I}_1 = \mathbf{132\angle 30°\ A}$$

$$\mathbf{I}_b = \mathbf{I}_2 - \mathbf{I}_1 = -38.105 + j27.9 = \mathbf{47.23\angle 143.8°\ A}$$

$$\mathbf{I}_c = -\mathbf{I}_2 = \mathbf{120.9\angle 230.9°\ A}$$

(b) $$\mathbf{S}_{AB} = |\mathbf{I}_1 - \mathbf{I}_3|^2 (j10) = j58.08 \text{ kVA}$$

$$\mathbf{S}_{BC} = |\mathbf{I}_2 - \mathbf{I}_3|^2 (20) = 29.04 \text{ kVA}$$

$$\mathbf{S}_{CA} = |\mathbf{I}_3|^2 (-j5) = (152.42)^2 (-j5) = -j116.16 \text{ kVA}$$

$$\mathbf{S} = \mathbf{S}_{AB} + \mathbf{S}_{BC} + \mathbf{S}_{CA} = 29.04 - j58.08 \text{ kVA}$$

Real power absorbed = **29.04 kW**

(c) Total complex supplied by the source is

$$\mathbf{S} = \mathbf{29.04 - j58.08\ kVA}$$

www.konkur.in

Chapter 12, Solution 57.

We apply mesh analysis to the circuit shown below.

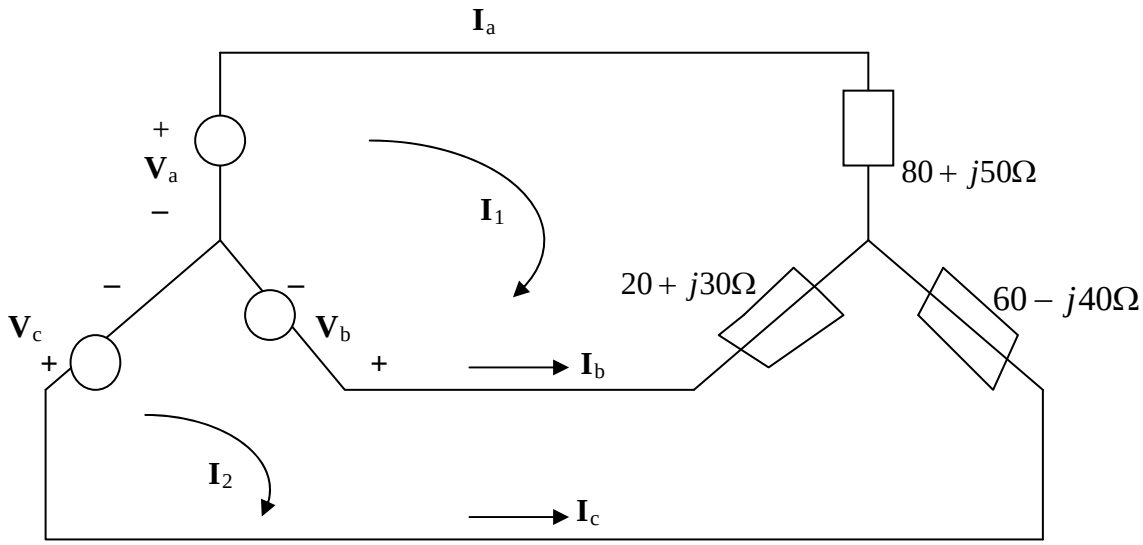

$$(100 + j80)I_1 - (20 + j30)I_2 = V_a - V_b = 165 + j95.263 \qquad (1)$$

$$-(20 + j30)I_1 + (80 - j10)I_2 = V_b - V_c = -j190.53 \qquad (2)$$

Solving (1) and (2) gives $I_1 = 1.8616 - j0.6084$, $I_2 = 0.9088 - j1.722$.

$$\boldsymbol{I_a = I_1 = \underline{1.9585\angle -18.1^o \text{ A}}, \quad I_b = I_2 - I_1 = -0.528 - j1.1136 = \underline{1.4656\angle -130.55^o \text{ A}}}$$

$$\boldsymbol{I_c = -I_2 = \underline{1.947\angle 117.8^o \text{ A}}}$$

www.konkur.in

Chapter 12, Solution 58.

The schematic is shown below. IPRINT is inserted in the neutral line to measure the current through the line. In the AC Sweep box, we select Total Ptss = 1, Start Freq. = 0.1592, and End Freq. = 0.1592. After simulation, the output file includes

FREQ	IM(V_PRINT4)	IP(V_PRINT4)
1.592 E–01	2.156 E+01	–8.997 E+01

i.e. I_n = **21.56∠–89.97° A**

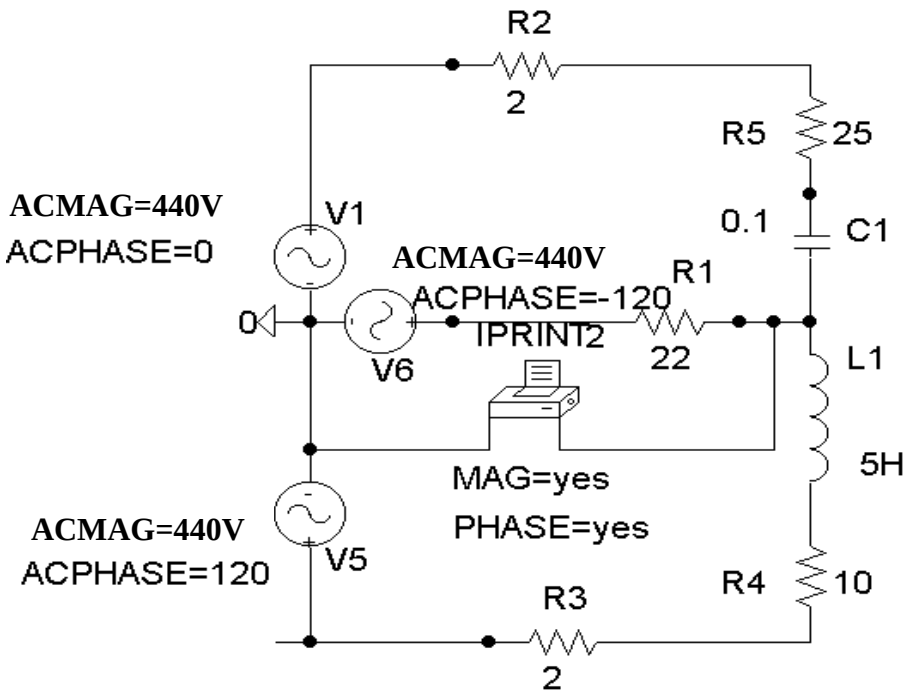

www.konkur.in

Chapter 12, Solution 59.

The schematic is shown below. In the AC Sweep box, we set Total Pts = 1, Start Freq = 60, and End Freq = 60. After simulation, we obtain an output file which includes

FREQ	VM(1)	VP(1)
6.000 E+01	2.206 E+02	–3.456 E+01
FREQ	VM(2)	VP(2)
6.000 E+01	2.141 E+02	–8.149 E+01
FREQ	VM(3)	VP(3)
6.000 E+01	4.991 E+01	–5.059 E+01

i.e. V_{AN} = **220.6∠–34.56°**, V_{BN} = **214.1∠–81.49°**, V_{CN} = **49.91∠–50.59° V**

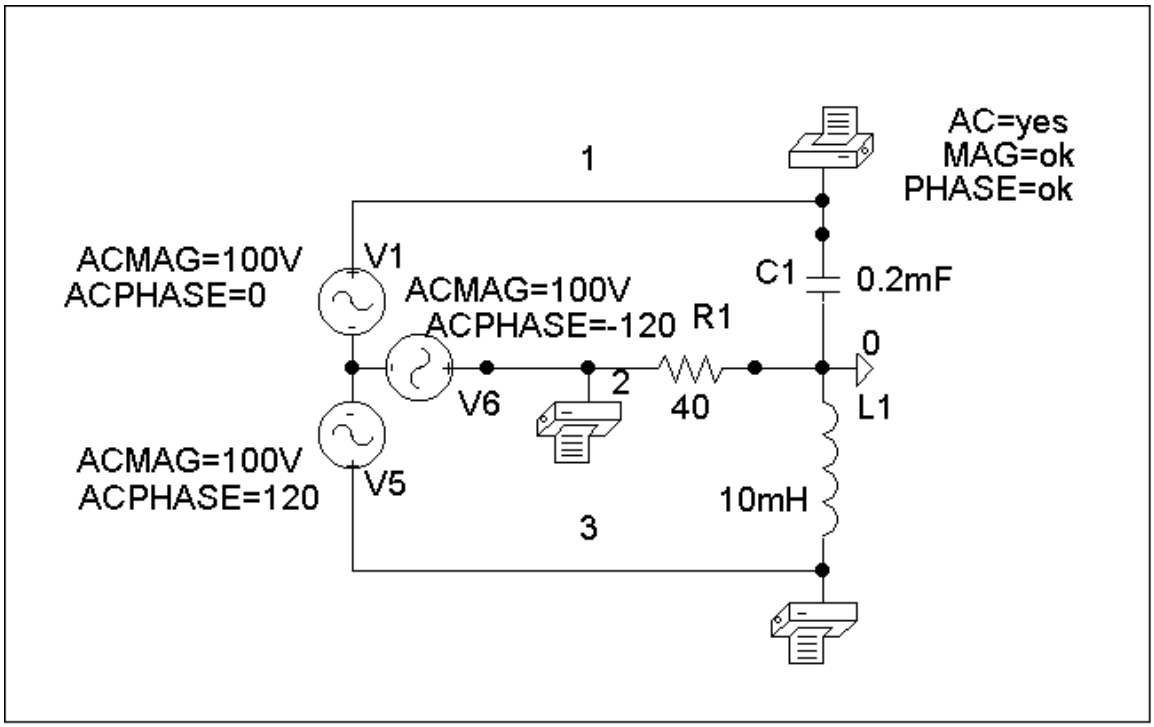

www.konkur.in

Chapter 12, Solution 60.

The schematic is shown below. IPRINT is inserted to give I_o. We select Total Pts = 1, Start Freq = 0.1592, and End Freq = 0.1592 in the AC Sweep box. Upon simulation, the output file includes

FREQ	IM(V_PRINT4)	IP(V_PRINT4)
1.592 E–01	1.953 E+01	–1.517 E+01

from which, I_o = **19.53∠–15.17° A**

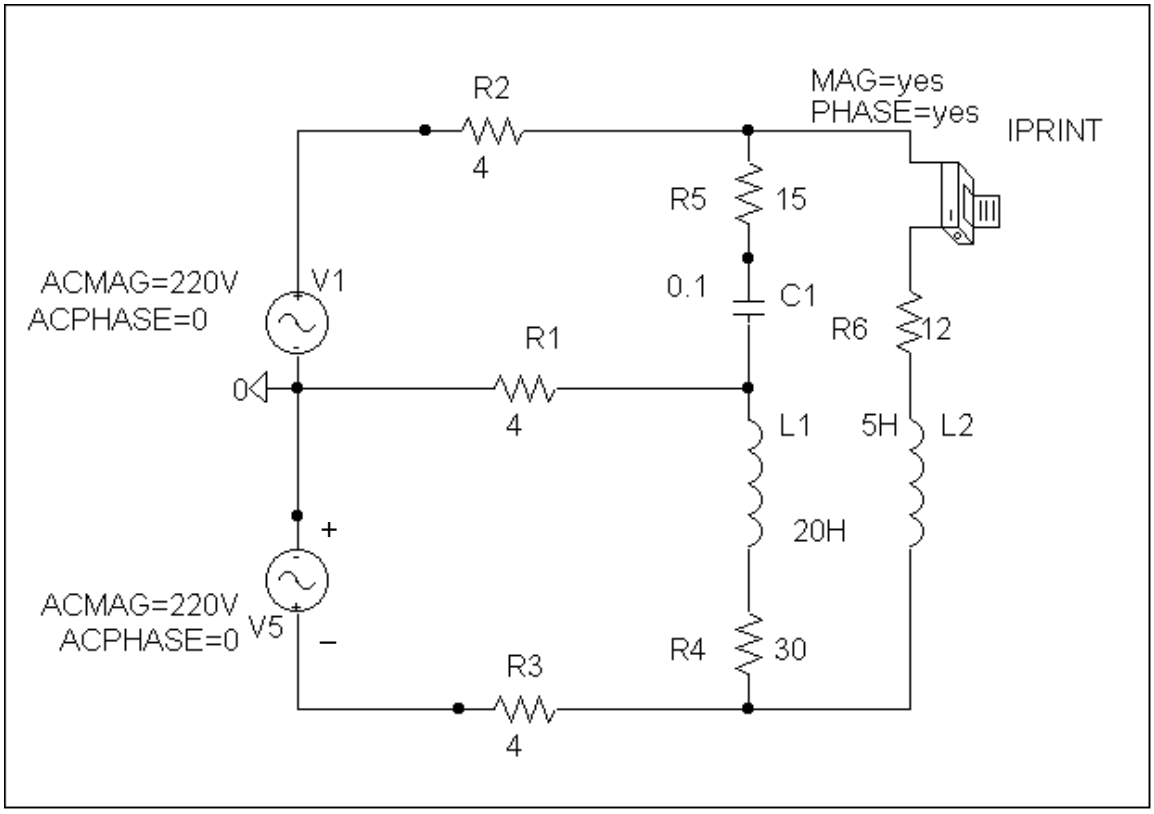

www.konkur.in

Chapter 12, Solution 61.

The schematic is shown below. Pseudocomponents IPRINT and PRINT are inserted to measure I_{aA} and V_{BN}. In the AC Sweep box, we set Total Pts = 1, Start Freq = 0.1592, and End Freq = 0.1592. Once the circuit is simulated, we get an output file which includes

FREQ	VM(2)	VP(2)
1.592 E–01	2.308 E+02	–1.334 E+02
FREQ	IM(V_PRINT2)	IP(V_PRINT2)
1.592 E–01	1.115 E+01	3.699 E+01

from which

$$I_{aA} = \mathbf{11.15\angle 37^\circ\ A},\quad V_{BN} = \mathbf{230.8\angle -133.4^\circ\ V}$$

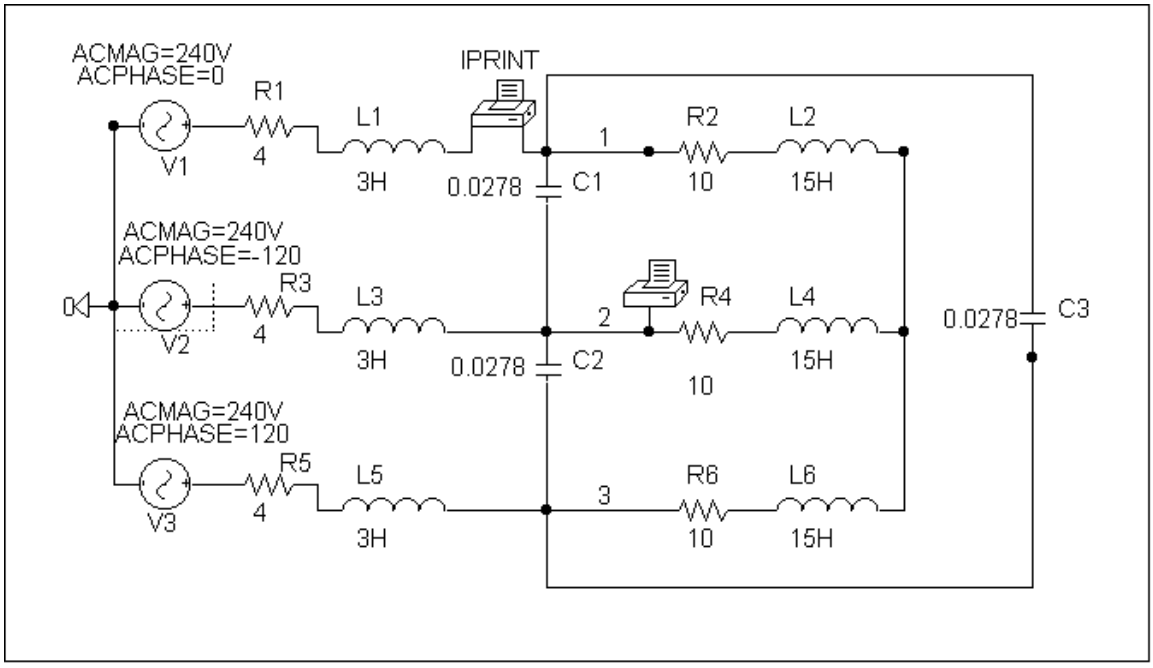

www.konkur.in

Chapter 12, Solution 62.

Using Fig. 12.68, design a problem to help other students to better understand how to use *PSpice* to analyze three-phase circuits.

Although there are many ways to solve this problem, this is an example based on the same kind of problem asked in the third edition.

Problem

The circuit in Fig. 12.68 operates at 60 Hz. Use *PSpice* to find the source current $\mathbf{I}_{ab}$ and the line current $\mathbf{I}_{bB}$.

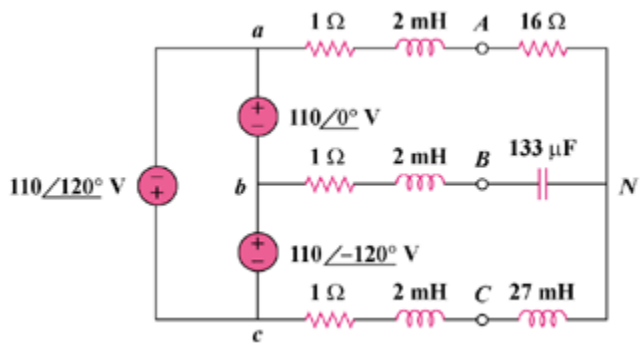

Figure 12.68

Solution

Because of the delta-connected source involved, we follow Example 12.12. In the AC Sweep box, we type Total Pts = 1, Start Freq = 60, and End Freq = 60. After simulation, the output file includes

FREQ	IM(V_PRINT2)	IP(V_PRINT2)
6.000 E+01	5.960 E+00	–9.141 E+01
FREQ	IM(V_PRINT1)	IP(V_PRINT1)
6.000 E+01	7.333 E+07	1.200 E+02

From which

$$I_{ab} = \mathbf{3.432\angle -46.31^\circ\ A},\quad I_{bB} = \mathbf{10.39\angle -78.4^\circ\ A}$$

www.konkur.in

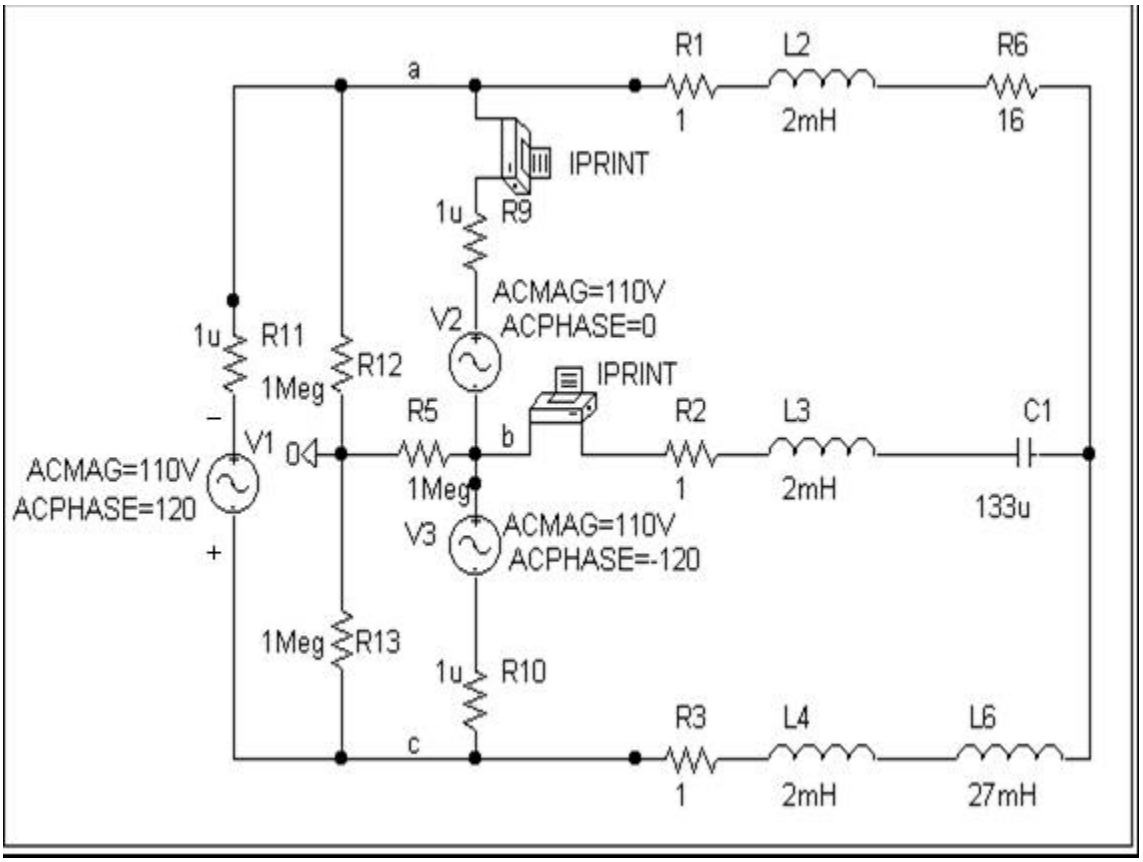

Chapter 12, Solution 63.

Let $\omega = 1$ so that $L = X/\omega = 20\text{ H}$, and $C = \dfrac{1}{\omega X} = 0.0333\text{ F}$

The schematic is shown below..

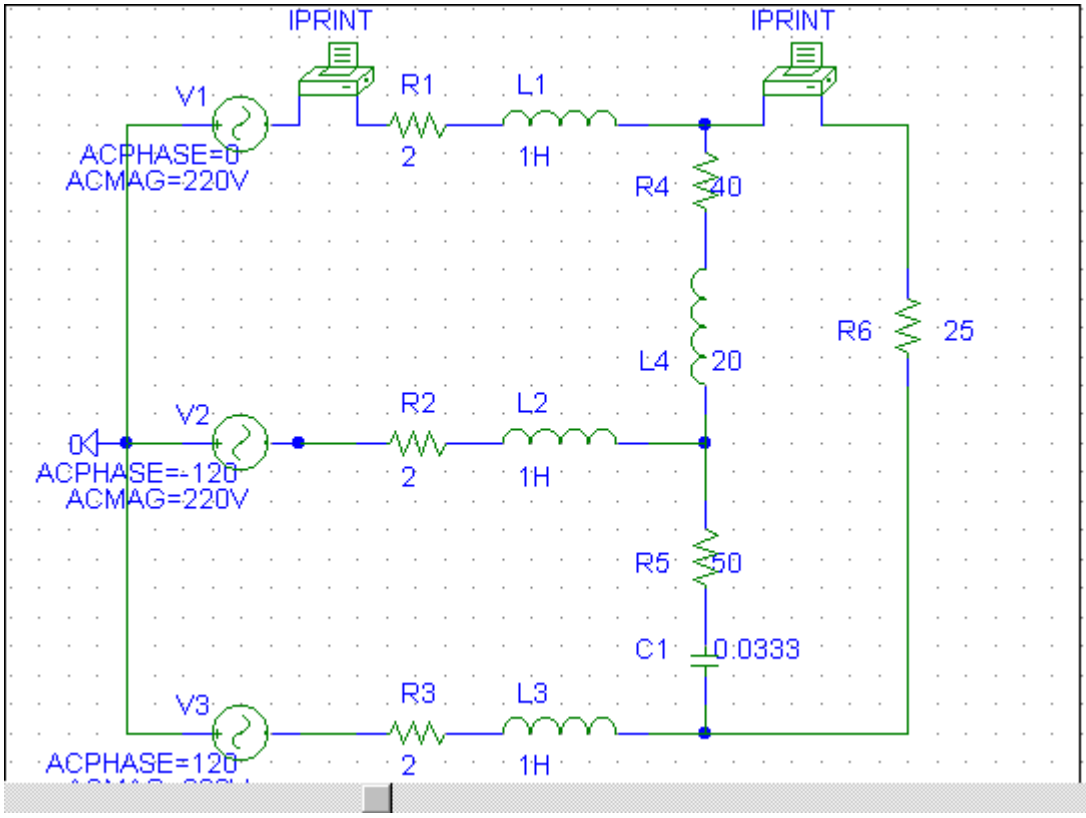

When the file is saved and run, we obtain an output file which includes the following:

FREQ	IM(V_PRINT1)	IP(V_PRINT1)
1.592E-01	1.867E+01	1.589E+02

FREQ	IM(V_PRINT2)	IP(V_PRINT2)
1.592E-01	1.238E+01	1.441E+02

From the output file, the required currents are:

$$\underline{\boldsymbol{I_{aA} = 18.67\angle 158.9^o\ \text{A},\quad I_{AC} = 12.38\angle 144.1^o\ \text{A}}}$$

www.konkur.in

Chapter 12, Solution 64.

We follow Example 12.12. In the AC Sweep box we type Total Pts = 1, Start Freq = 0.1592, and End Freq = 0.1592. After simulation the output file includes

FREQ	IM(V_PRINT1)	IP(V_PRINT1)
1.592 E–01	4.710 E+00	7.138 E+01
FREQ	IM(V_PRINT2)	IP(V_PRINT2)
1.592 E–01	6.781 E+07	–1.426 E+02
FREQ	IM(V_PRINT3)	IP(V_PRINT3)
1.592 E–01	3.898 E+00	–5.076 E+00
FREQ	IM(V_PRINT4)	IP(V_PRINT4)
1.592 E–01	3.547 E+00	6.157 E+01
FREQ	IM(V_PRINT5)	IP(V_PRINT5)
1.592 E–01	1.357 E+00	9.781 E+01
FREQ	IM(V_PRINT6)	IP(V_PRINT6)
1.592 E–01	3.831 E+00	–1.649 E+02

from this we obtain

$$I_{aA} = \mathbf{4.71\angle 71.38^\circ\ A},\ I_{bB} = \mathbf{6.781\angle -142.6^\circ\ A},\ I_{cC} = \mathbf{3.898\angle -5.08^\circ\ A}$$

$$I_{AB} = \mathbf{3.547\angle 61.57^\circ\ A},\ I_{AC} = \mathbf{1.357\angle 97.81^\circ\ A},\ I_{BC} = \mathbf{3.831\angle -164.9^\circ\ A}$$

www.konkur.in

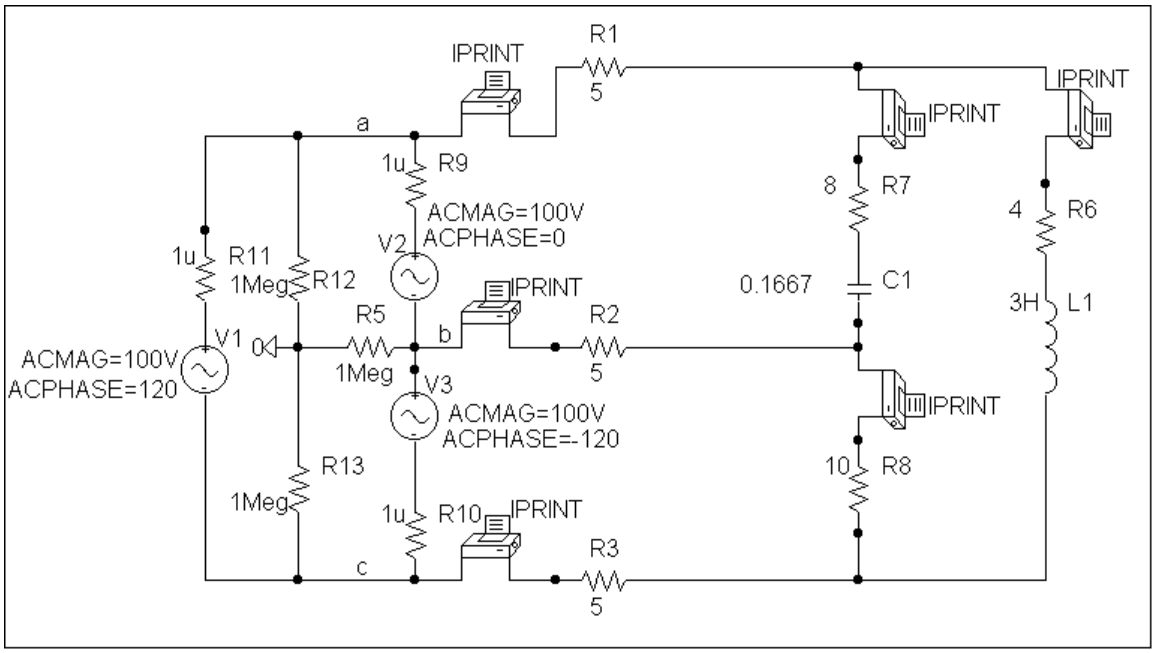

www.konkur.in

Chapter 12, Solution 65.

Due to the delta-connected source, we follow Example 12.12. We type Total Pts = 1, Start Freq = 0.1592, and End Freq = 0.1592. The schematic is shown below. After it is saved and simulated, we obtain an output file which includes

FREQ	IM(V_PRINT1)	IP(V_PRINT1)
1.592E-01	1.140E+01	8.664E+00
FREQ	IM(V_PRINT2)	IP(V_PRINT2)
1.592E-01	1.140E+01	-1.113E+02
FREQ	IM(V_PRINT3)	IP(V_PRINT3)
1.592E-01	1.140E+01	1.287E+02

Thus, I_{aA} = **11.02∠12° A**, I_{bB} = **11.02∠–108° A**, I_{cC} = **11.02∠132° A**

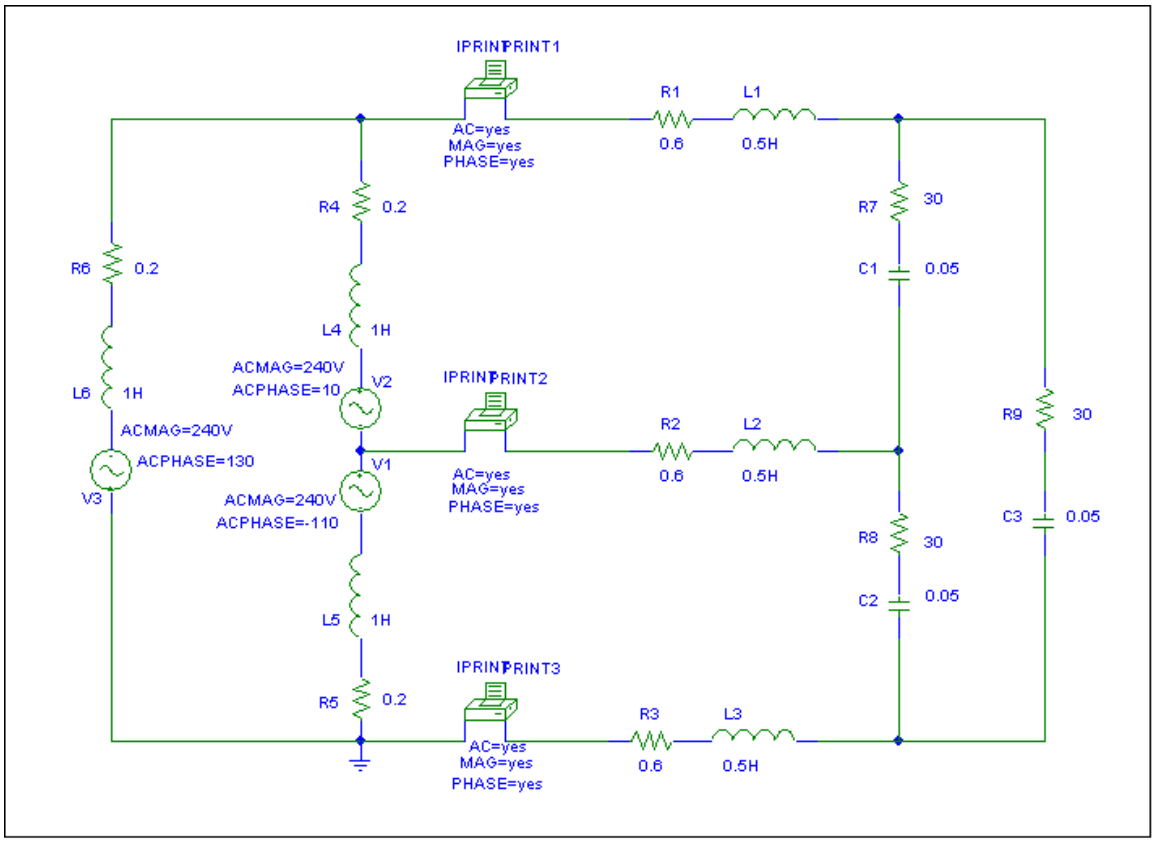

www.konkur.in

Since this is a balanced circuit, we can perform a quick check. The load resistance is large compared to the line and source impedances so we will ignore them (although it would not be difficult to include them).

Converting the sources to a Y configuration we get:

$V_{an} = 138.56 \angle{-20^\circ}$ Vrms

and

$Z_Y = 10 - j6.667 = 12.019\angle{-33.69^\circ}$

Now we can calculate,

$I_{aA} = (138.56 \angle{-20^\circ})/(12.019\angle{-33.69^\circ}) = 11.528\angle{13.69^\circ}$

Clearly, we have a good approximation which is very close to what we really have.

www.konkur.in

Chapter 12, Solution 66.

(a) $V_p = \frac{V_L}{\sqrt{3}} = \frac{208}{\sqrt{3}} = \mathbf{120\ V}$

(b) Because the load is unbalanced, we have an unbalanced three-phase system. Assuming an abc sequence,

$$\mathbf{I}_1 = \frac{120\angle 0°}{48} = 2.5\angle 0°\ \text{A}$$

$$\mathbf{I}_2 = \frac{120\angle -120°}{40} = 3\angle -120°\ \text{A}$$

$$\mathbf{I}_3 = \frac{120\angle 120°}{60} = 2\angle 120°\ \text{A}$$

$$-\mathbf{I}_N = \mathbf{I}_1 + \mathbf{I}_2 + \mathbf{I}_3 = 2.5 + (3)\left(-0.5 - j\frac{\sqrt{3}}{2}\right) + (2)\left(-0.5 + j\frac{\sqrt{3}}{2}\right)$$

$$\mathbf{I}_N = j\frac{\sqrt{3}}{2} = j0.866 = 0.866\angle 90°\ \text{A}$$

Hence,

$I_1 = \mathbf{2.5\ A}$, $I_2 = \mathbf{3\ A}$, $I_3 = \mathbf{2\ A}$, $I_N = \mathbf{0.866\ A}$

(c) $P_1 = I_1^2 R_1 = (2.5)^2(48) = \mathbf{300\ W}$

$P_2 = I_2^2 R_2 = (3)^2(40) = \mathbf{360\ W}$

$P_3 = I_3^2 R_3 = (2)^2(60) = \mathbf{240\ W}$

(d) $P_T = P_1 + P_2 + P_3 = \mathbf{900\ W}$

www.konkur.in

Chapter 12, Solution 67.

(a) The power to the motor is

$$P_T = S\cos\theta = (260)(0.85) = 221\text{ kW}$$

The motor power per phase is

$$P_p = \frac{1}{3}P_T = 73.67\text{ kW}$$

Hence, the wattmeter readings are as follows:

$$W_a = 73.67 + 24 = \mathbf{97.67\ kW}$$

$$W_b = 73.67 + 15 = \mathbf{88.67\ kW}$$

$$W_c = 73.67 + 9 = \mathbf{82.67\ kW}$$

(b) The motor load is balanced so that $I_N = 0$.

For the lighting loads,

$$I_a = \frac{24{,}000}{120} = 200\text{ A}$$

$$I_b = \frac{15{,}000}{120} = 125\text{ A}$$

$$I_c = \frac{9{,}000}{120} = 75\text{ A}$$

If we let

$$\mathbf{I}_a = I_a\angle 0° = 200\angle 0°\text{ A}$$

$$\mathbf{I}_b = 125\angle -120°\text{ A}$$

$$\mathbf{I}_c = 75\angle 120°\text{ A}$$

Then,

$$-\mathbf{I}_N = \mathbf{I}_a + \mathbf{I}_b + \mathbf{I}_c$$

$$-\mathbf{I}_N = 200 + (125)\left(-0.5 - j\frac{\sqrt{3}}{2}\right) + (75)\left(-0.5 + j\frac{\sqrt{3}}{2}\right)$$

$$-\mathbf{I}_N = 100 - j43.3\text{ A}$$

$$\left|\mathbf{I}_N\right| = \mathbf{108.97\ A}$$

www.konkur.in

Chapter 12, Solution 68.

(a) $S = \sqrt{3}\, V_L I_L = \sqrt{3}\,(330)(8.4) =$ **4801 VA**

(b) $P = S\cos\theta \longrightarrow pf = \cos\theta = \dfrac{P}{S}$

$$pf = \frac{4500}{4801.24} = \mathbf{0.9372}$$

(c) For a wye-connected load,

$$I_p = I_L = \mathbf{8.4\ A}$$

(d) $V_p = \dfrac{V_L}{\sqrt{3}} = \dfrac{330}{\sqrt{3}} =$ **190.53 V**

www.konkur.in

Chapter 12, Solution 69.

For load 1,

$$\overline{S}_1 = S_1 \cos\theta_1 + jS_1 \sin\theta_1$$

$$pf = 0.85 = \cos\theta_1 \quad \longrightarrow \quad \theta_1 = 31.79^o$$

$$\overline{S}_1 = 13.6 + j8.43 \quad \text{kVA}$$

For load 2,

$$\overline{S_2} = 12x0.6 + j12x0.8 = 7.2 + j9.6 \quad \text{kVA}$$

For load 3,

$$\overline{S}_3 = 8 + j0 \quad \text{kVA}$$

Therefore,

$$\mathbf{S = S_1 + S_2 + S_3 = [28.8+j18.03]\ kVA}$$

Although we can solve this using a delta load, it will be easier to assume our load is wye connected. We also need the wye voltages and will assume that the phase angle on V_{an} = 208/1.73205 = 120.089 is –30 degrees.

Since **S** = 3**VI*** or **I*** = **S**/(3**V**) = (33,978∠32.048°)/[3(120.089)∠–30°] =

94.31∠62.05° A.

$$\mathbf{I_a = 94.31\angle{-62.05}^\circ\ A,\ I_b = 94.31\angle 177.95^\circ\ A,\ I_c = 94.31\angle 57.95^\circ\ A}$$

I = 138.46 – j86.68 = **163.35∠-32˚ A**.

www.konkur.in

Chapter 12, Solution 70.

$$P_T = P_1 + P_2 = 1200 - 400 = 800$$

$$Q_T = P_2 - P_1 = -400 - 1200 = -1600$$

$$\tan\theta = \frac{Q_T}{P_T} = \frac{-1600}{800} = -2 \longrightarrow \theta = -63.43°$$

$$\text{pf} = \cos\theta = \mathbf{0.4472} \quad \textbf{(leading)}$$

$$Z_p = \frac{V_L}{I_L} = \frac{240}{6} = 40$$

$$\mathbf{Z_p = 40\angle -63.43°\ \Omega}$$

www.konkur.in

Chapter 12, Solution 71.

(a) If $\mathbf{V}_{ab} = 208\angle 0°$, $\mathbf{V}_{bc} = 208\angle -120°$, $\mathbf{V}_{ca} = 208\angle 120°$,

$$\mathbf{I}_{AB} = \frac{\mathbf{V}_{ab}}{\mathbf{Z}_{Ab}} = \frac{208\angle 0°}{20} = 10.4\angle 0°$$

$$\mathbf{I}_{BC} = \frac{\mathbf{V}_{bc}}{\mathbf{Z}_{BC}} = \frac{208\angle -120°}{10\sqrt{2}\angle -45°} = 14.708\angle -75°$$

$$\mathbf{I}_{CA} = \frac{\mathbf{V}_{ca}}{\mathbf{Z}_{CA}} = \frac{208\angle 120°}{13\angle 22.62°} = 16\angle 97.38°$$

$$\mathbf{I}_{aA} = \mathbf{I}_{AB} - \mathbf{I}_{CA} = 10.4\angle 0° - 16\angle 97.38°$$

$$\mathbf{I}_{aA} = 10.4 + 2.055 - j15.867$$

$$\mathbf{I}_{aA} = 20.171\angle -51.87°$$

$$\mathbf{I}_{cC} = \mathbf{I}_{CA} - \mathbf{I}_{BC} = 16\angle 97.83° - 14.708\angle -75°$$

$$\mathbf{I}_{cC} = 30.64\angle 101.03°$$

$$P_1 = |\mathbf{V}_{ab}||\mathbf{I}_{aA}|\cos(\theta_{V_{ab}} - \theta_{I_{aA}})$$

$$P_1 = (208)(20.171)\cos(0° + 51.87°) = \mathbf{2.590\ \boldsymbol{kW}}$$

$$P_2 = |\mathbf{V}_{cb}||\mathbf{I}_{cC}|\cos(\theta_{V_{cb}} - \theta_{I_{cC}})$$

But $\mathbf{V}_{cb} = -\mathbf{V}_{bc} = 208\angle 60°$

$$P_2 = (208)(30.64)\cos(60° - 101.03°) = \mathbf{4.808\ \boldsymbol{kW}}$$

(b) $P_T = P_1 + P_2 = 7398.17$ W

$Q_T = \sqrt{3}(P_2 - P_1) = 3840.25$ VAR

$\mathbf{S}_T = P_T + jQ_T = 7398.17 + j3840.25$ VA

$S_T = |\mathbf{S}_T| = \mathbf{8.335\ \boldsymbol{kVA}}$

www.konkur.in

Chapter 12, Solution 72.

From Problem 12.11,

$$\mathbf{V}_{AB} = 220\angle 130^\circ \text{ V} \quad \text{and} \quad \mathbf{I}_{aA} = 30\angle 180^\circ \text{ A}$$

$$P_1 = (220)(30)\cos(130^\circ - 180^\circ) = \mathbf{4.242\ \boldsymbol{kW}}$$

$$\mathbf{V}_{CB} = -\mathbf{V}_{BC} = 220\angle 190^\circ$$

$$\mathbf{I}_{cC} = 30\angle -60^\circ$$

$$P_2 = (220)(30)\cos(190^\circ + 60^\circ) = \mathbf{-\ 2.257\ \boldsymbol{k}W}$$

www.konkur.in

Chapter 12, Solution 73.

Consider the circuit as shown below.

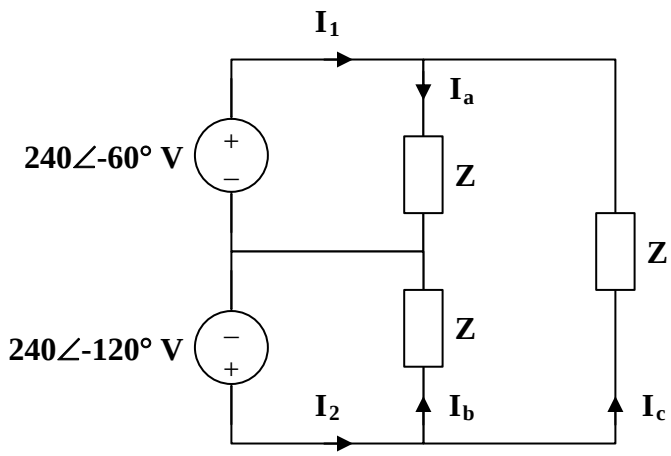

$$\mathbf{Z} = 10 + j30 = 31.62\angle 71.57°$$

$$\mathbf{I}_a = \frac{240\angle -60°}{31.62\angle 71.57°} = 7.59\angle -131.57°$$

$$\mathbf{I}_b = \frac{240\angle -120°}{31.62\angle 71.57°} = 7.59\angle -191.57°$$

$$\mathbf{I}_c\,\mathbf{Z} + 240\angle -60° - 240\angle -120° = 0$$

$$\mathbf{I}_c = \frac{-240}{31.62\angle 71.57°} = 7.59\angle 108.43°$$

$$\mathbf{I}_1 = \mathbf{I}_a - \mathbf{I}_c = 13.146\angle -101.57°$$

$$\mathbf{I}_2 = \mathbf{I}_b + \mathbf{I}_c = 13.146\angle 138.43°$$

$$P_1 = \mathrm{Re}\left[\,\mathbf{V}_1\,\mathbf{I}_1^*\,\right] = \mathrm{Re}\left[\,(240\angle -60°)(13.146\angle 101.57°)\,\right] = \mathbf{2.360\ \boldsymbol{kW}}$$

$$P_2 = \mathrm{Re}\left[\,\mathbf{V}_2\,\mathbf{I}_2^*\,\right] = \mathrm{Re}\left[\,(240\angle -120°)(13.146\angle -138.43°)\,\right] = \mathbf{-632.8\ W}$$

www.konkur.in

Chapter 12, Solution 74.

Consider the circuit shown below.

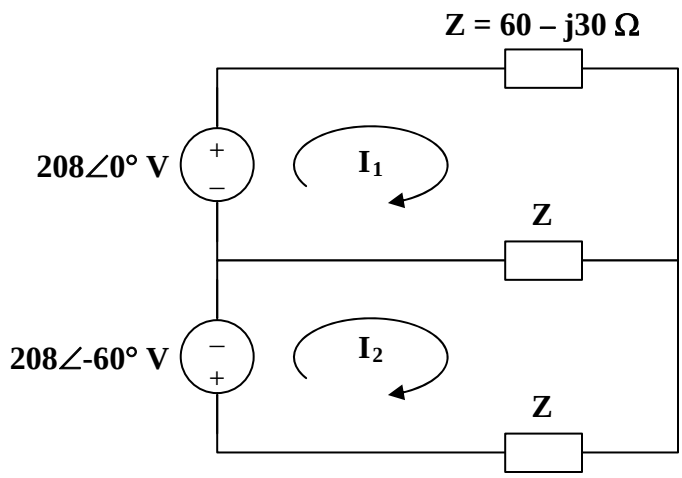

For mesh 1,

$$208 = 2\mathbf{Z}\mathbf{I}_1 - \mathbf{Z}\mathbf{I}_2$$

For mesh 2,

$$-208\angle -60° = -\mathbf{Z}\mathbf{I}_1 + 2\mathbf{Z}\mathbf{I}_2$$

In matrix form,

$$\begin{bmatrix} 208 \\ -208\angle -60° \end{bmatrix} = \begin{bmatrix} 2\mathbf{Z} & -\mathbf{Z} \\ -\mathbf{Z} & 2\mathbf{Z} \end{bmatrix} \begin{bmatrix} \mathbf{I}_1 \\ \mathbf{I}_2 \end{bmatrix}$$

$$\Delta = 3\mathbf{Z}^2, \quad \Delta_1 = (208)(1.5 + j0.866)\mathbf{Z}, \quad \Delta_2 = (208)(j1.732)\mathbf{Z}$$

$$\mathbf{I}_1 = \frac{\Delta_1}{\Delta} = \frac{(208)(1.5 + j0.866)}{(3)(60 - j30)} = 1.789\angle 56.56°$$

$$\mathbf{I}_2 = \frac{\Delta_2}{\Delta} = \frac{(208)(j1.732)}{(3)(60 - j30)} = 1.79\angle 116.56°$$

$$P_1 = \mathrm{Re}\left[\mathbf{V}_1 \mathbf{I}_1^*\right] = \mathrm{Re}\left[(208)(1.789\angle -56.56°)\right] = \mathbf{208.98\ W}$$

$$P_2 = \mathrm{Re}\left[\mathbf{V}_2 (-\mathbf{I}_2)^*\right] = \mathrm{Re}\left[(208\angle -60°))(1.79\angle 63.44°)\right] = \mathbf{371.65\ W}$$

www.konkur.in

Chapter 12, Solution 75.

(a) $I = \frac{V}{R} = \frac{12}{600} =$ **20 mA**

(b) $I = \frac{V}{R} = \frac{120}{600} =$ **200 mA**

www.konkur.in

Chapter 12, Solution 76.

If both appliances have the same power rating, P,

$$I = \frac{P}{V_s}$$

For the 120-V appliance, $I_1 = \frac{P}{120}$.

For the 240-V appliance, $I_2 = \frac{P}{240}$.

$$\text{Power loss} = I^2 R = \begin{cases} \dfrac{P^2 R}{120^2} & \text{for the 120-V appliance} \\ \dfrac{P^2 R}{240^2} & \text{for the 240-V appliance} \end{cases}$$

Since $\frac{1}{120^2} > \frac{1}{240^2}$, **the losses in the 120-V appliance are higher**.

www.konkur.in

Chapter 12, Solution 77.

$$P_g = P_T - P_{load} - P_{line}, \qquad pf = 0.85$$

But $\quad P_T = 3600\cos\theta = 3600 \times pf = 3060$

$$P_g = 3060 - 2500 - (3)(80) = \mathbf{320\ W}$$

www.konkur.in

Chapter 12, Solution 78.

$$\cos\theta_1 = \frac{51}{60} = 0.85 \quad \longrightarrow \quad \theta_1 = 31.79°$$
$$Q_1 = S_1 \sin\theta_1 = (60)(0.5268) = 31.61 \text{ kVAR}$$

$$P_2 = P_1 = 51 \text{ kW}$$
$$\cos\theta_2 = 0.95 \quad \longrightarrow \quad \theta_2 = 18.19°$$
$$S_2 = \frac{P_2}{\cos\theta_2} = 53.68 \text{ kVA}$$
$$Q_2 = S_2 \sin\theta_2 = 16.759 \text{ kVAR}$$

$$Q_c = Q_1 - Q_2 = 3.61 - 16.759 = 14.851 \text{ kVAR}$$

For each load,

$$Q_{c1} = \frac{Q_c}{3} = 4.95 \text{ kVAR}$$
$$C = \frac{Q_{c1}}{\omega V^2} = \frac{4950}{(2\pi)(60)(440)^2} = \mathbf{67.82\ \mu F}$$

www.konkur.in

Chapter 12, Solution 79.

Consider the per-phase equivalent circuit below.

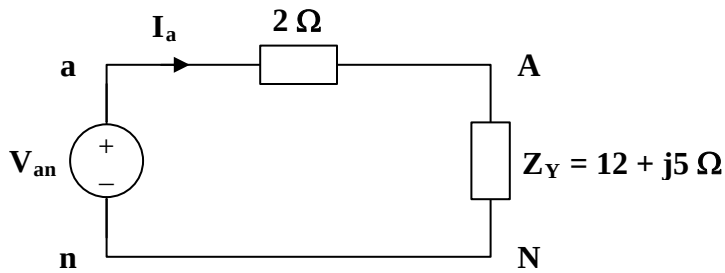

$$\mathbf{I}_a = \frac{\mathbf{V}_{an}}{\mathbf{Z}_Y + 2} = \frac{255\angle 0°}{14 + j5} = \mathbf{17.15\angle -19.65°\ A}$$

Thus,

$$\mathbf{I}_b = \mathbf{I}_a \angle -120° = \mathbf{17.15\angle -139.65°\ A}$$
$$\mathbf{I}_c = \mathbf{I}_a \angle 120° = \mathbf{17.15\angle 100.35°\ A}$$

$$\mathbf{V}_{AN} = \mathbf{I}_a\,\mathbf{Z}_Y = (17.15\angle -19.65°)(13\angle 22.62°) = \mathbf{223\angle 2.97°\ V}$$

Thus,

$$\mathbf{V}_{BN} = \mathbf{V}_{AN} \angle -120° = \mathbf{223\angle -117.63°\ V}$$
$$\mathbf{V}_{CN} = \mathbf{V}_{AN} \angle 120° = \mathbf{223\angle 122.97°\ V}$$

www.konkur.in

Chapter 12, Solution 80.

$$S = S_1 + S_2 + S_3 = 6[0.83 + j\sin(\cos^{-1} 0.83)] + S_2 + 8(0.7071 - j0.7071)$$
$$S = 10.6368 - j2.31 + S_2 \text{ kVA} \qquad (1)$$

But
$$S = \sqrt{3}V_L I_L \angle\theta = \sqrt{3}(208)(84.6)(0.8 + j0.6) \text{ VA} = 24.383 + \text{j}18.287 \text{ kVA} \qquad (2)$$

From (1) and (2),
$$S_2 = 13.746 + j20.6 = 24.76\angle 56.28 \text{ kVA}$$
Thus, the unknown load is **24.76 kVA at 0.5551 pf lagging**.

www.konkur.in

Chapter 12, Solution 81.

$$\text{pf} = 0.8 \quad \text{(leading)} \longrightarrow \theta_1 = -36.87°$$
$$\mathbf{S}_1 = 150\angle -36.87° \text{ kVA}$$

$$\text{pf} = 1.0 \longrightarrow \theta_2 = 0°$$
$$\mathbf{S}_2 = 100\angle 0° \text{ kVA}$$

$$\text{pf} = 0.6 \quad \text{(lagging)} \longrightarrow \theta_3 = 53.13°$$
$$\mathbf{S}_3 = 200\angle 53.13° \text{ kVA}$$

$$\mathbf{S}_4 = 80 + j95 \text{ kVA}$$

$$\mathbf{S} = \mathbf{S}_1 + \mathbf{S}_2 + \mathbf{S}_3 + \mathbf{S}_4$$
$$\mathbf{S} = 420 + j165 = 451.2\angle 21.45° \text{ kVA}$$

$$S = \sqrt{3}\, V_L I_L$$

$$I_L = \frac{S}{\sqrt{3}\, V_L} = \frac{451.2 \times 10^3}{\sqrt{3} \times 480} = 542.7 \text{ A}$$

For the line,

$$\mathbf{S}_L = 3 I_L^2\, \mathbf{Z}_L = (3)(542.7)^2 (0.02 + j0.05)$$
$$\mathbf{S}_L = 17.67 + j44.18 \text{ kVA}$$

At the source,

$$\mathbf{S}_T = \mathbf{S} + \mathbf{S}_L = 437.7 + j209.2$$
$$\mathbf{S}_T = 485.1\angle 25.55° \text{ kVA}$$

$$V_T = \frac{S_T}{\sqrt{3}\, I_L} = \frac{485.1 \times 10^3}{\sqrt{3} \times 542.7} = \mathbf{516\ V}$$

www.konkur.in

Chapter 12, Solution 82.

$$\bar{S}_1 = 400(0.8 + j0.6) = 320 + j240 \text{ kVA}, \qquad \bar{S}_2 = 3\frac{V^2{}_p}{Z^*{}_p}$$

For the delta-connected load, $V_L = V_p$

$$\bar{S}_2 = 3x\frac{(2400)^2}{10 - j8} = 1053.7 + j842.93 \text{ kVA}$$

$$\bar{S} = \bar{S}_1 + \bar{S}_2 = 1.3737 + j1.0829 \text{ MVA}$$

Let $I = I_1 + I_2$ be the total line current. For I_1,

$$S_1 = 3V_p I^*{}_1, \qquad V_p = \frac{V_L}{\sqrt{3}}$$

$$I^*{}_1 = \frac{S_1}{\sqrt{3}V_L} = \frac{(320 + j240)x10^3}{\sqrt{3}(2400)}, \qquad I_1 = 76.98 - j57.735$$

For I_2, convert the load to wye.

$$I_2 = I_p\sqrt{3}\angle -30^o = \frac{2400}{10 + j8}\sqrt{3}\angle -30^o = 273.1 - j289.76$$

$$I = I_1 + I_2 = 350 - j347.5$$

$$\boldsymbol{V_s = V_L + V_{line} = 2400 + I(3 + j6) = 5.185 + j1.405 \text{ kV}} \longrightarrow \quad |V_s| = \underline{\mathbf{5.372\ kV}}$$

www.konkur.in

Chapter 12, Solution 83.

$$S_1 = 120x746x0.95(0.707 + j0.707) = 60.135 + j60.135\,\text{kVA}, \qquad S_2 = 80\,\text{kVA}$$

$$S = S_1 + S_2 = 140.135 + j60.135\,\text{kVA}$$

But $|S| = \sqrt{3}V_L I_L \longrightarrow I_L = \dfrac{|S|}{\sqrt{3}V_L} = \dfrac{152.49x10^3}{\sqrt{3}x480} = \underline{183.42\text{ A}}$

www.konkur.in

Chapter 12, Solution 84.

We first find the magnitude of the various currents.

For the motor,

$$I_L = \frac{S}{\sqrt{3}\,V_L} = \frac{4000}{440\sqrt{3}} = 5.248 \text{ A}$$

For the capacitor,

$$I_C = \frac{Q_c}{V_L} = \frac{1800}{440} = 4.091 \text{ A}$$

For the lighting,

$$V_p = \frac{440}{\sqrt{3}} = 254 \text{ V}$$

$$I_{Li} = \frac{P_{Li}}{V_p} = \frac{800}{254} = 3.15 \text{ A}$$

Consider the figure below.

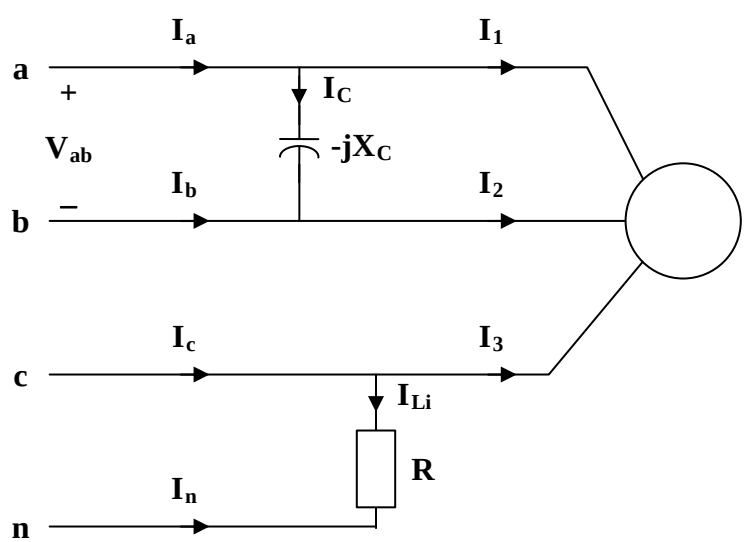

If $\mathbf{V}_{an} = V_p\angle 0°$, $\quad \mathbf{V}_{ab} = \sqrt{3}\,V_p\angle 30°$

$\mathbf{V}_{cn} = V_p\angle 120°$

$$\mathbf{I}_C = \frac{\mathbf{V}_{ab}}{-jX_C} = 4.091\angle 120°$$

www.konkur.in

$$\mathbf{I}_1 = \frac{\mathbf{V}_{ab}}{\mathbf{Z}_\Delta} = 4.091\angle(\theta + 30°)$$

where $\theta = \cos^{-1}(0.72) = 43.95°$

$$\mathbf{I}_1 = 5.249\angle 73.95°$$

$$\mathbf{I}_2 = 5.249\angle -46.05°$$

$$\mathbf{I}_3 = 5.249\angle 193.95°$$

$$\mathbf{I}_{Li} = \frac{\mathbf{V}_{cn}}{R} = 3.15\angle 120°$$

Thus,

$$\mathbf{I}_a = \mathbf{I}_1 + \mathbf{I}_C = 5.249\angle 73.95° + 4.091\angle 120°$$
$$\mathbf{I}_a = \mathbf{8.608\angle 93.96°\ A}$$

$$\mathbf{I}_b = \mathbf{I}_2 - \mathbf{I}_C = 5.249\angle -46.05° - 4.091\angle 120°$$
$$\mathbf{I}_b = \mathbf{9.271\angle -52.16°\ A}$$

$$\mathbf{I}_c = \mathbf{I}_3 + \mathbf{I}_{Li} = 5.249\angle 193.95° + 3.15\angle 120°$$
$$\mathbf{I}_c = \mathbf{6.827\angle 167.6°\ A}$$

$$\mathbf{I}_n = -\mathbf{I}_{Li} = \mathbf{3.15\angle -60°\ A}$$

www.konkur.in

Chapter 12, Solution 85.

Let $Z_Y = R$

$$V_p = \frac{V_L}{\sqrt{3}} = \frac{240}{\sqrt{3}} = 138.56 \text{ V}$$

$$P = V_p I_p = \frac{27}{2} = 9 \text{ kW} = \frac{V_p^2}{R}$$

$$R = \frac{V_p^2}{P} = \frac{(138.56)^2}{9000} = 2.133\,\Omega$$

Thus, $Z_Y = \mathbf{2.133\,\Omega}$

www.konkur.in

Chapter 12, Solution 86.

Consider the circuit shown below.

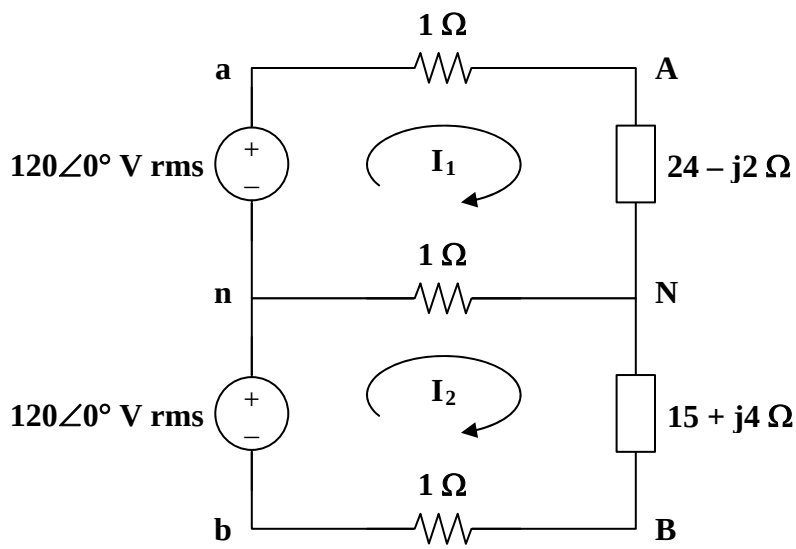

For the two meshes,

$$120 = (26 - j2)\mathbf{I}_1 - \mathbf{I}_2 \qquad (1)$$

$$120 = (17 + j4)\mathbf{I}_2 - \mathbf{I}_1 \qquad (2)$$

In matrix form,

$$\begin{bmatrix} 120 \\ 120 \end{bmatrix} = \begin{bmatrix} 26 - j2 & -1 \\ -1 & 17 + j4 \end{bmatrix} \begin{bmatrix} \mathbf{I}_1 \\ \mathbf{I}_2 \end{bmatrix}$$

$$\Delta = 449 + j70, \quad \Delta_1 = (120)(18 + j4), \quad \Delta_2 = (120)(27 - j2)$$

$$\mathbf{I}_1 = \frac{\Delta_1}{\Delta} = \frac{120 \times 18.44\angle 12.53°}{454.42\angle 8.86°} = 4.87\angle 3.67°$$

$$\mathbf{I}_2 = \frac{\Delta_2}{\Delta} = \frac{120 \times 27.07\angle -4.24°}{454.42\angle 8.86°} = 7.15\angle -13.1°$$

$$\mathbf{I}_{aA} = \mathbf{I}_1 = \mathbf{4.87\angle 3.67°\ A}$$

$$\mathbf{I}_{bB} = -\mathbf{I}_2 = \mathbf{7.15\angle 166.9°\ A}$$

$$\mathbf{I}_{nN} = \mathbf{I}_2 - \mathbf{I}_1 = \frac{\Delta_2 - \Delta_1}{\Delta}$$

$$\mathbf{I}_{nN} = \frac{(120)(9 - j6)}{449 + j70} = \mathbf{2.856\angle -42.55°\ A}$$

Chapter 12, Solution 87.

$$L = 50 \text{ mH} \longrightarrow j\omega L = j(2\pi)(60)(5010^{-3}) = j18.85$$

Consider the circuit below.

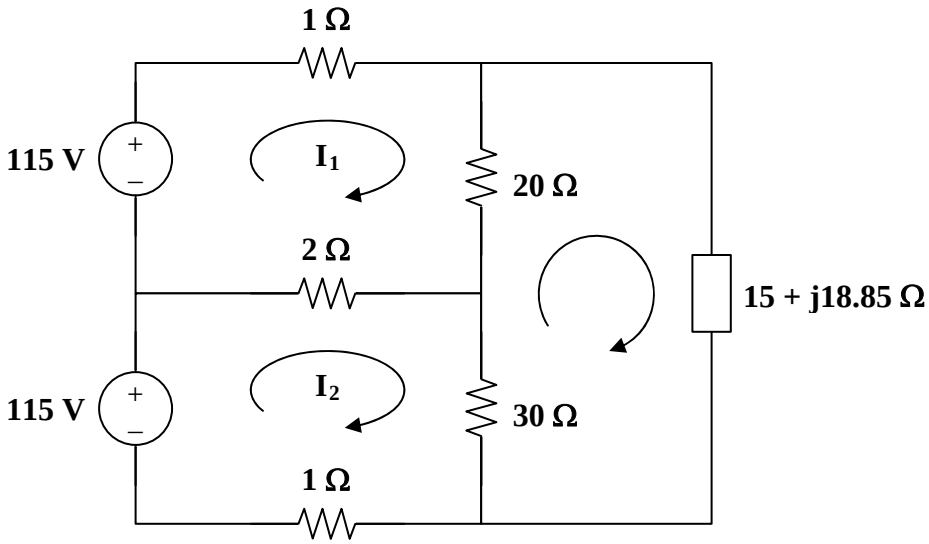

Applying KVl to the three meshes, we obtain

$$23\mathbf{I}_1 - 2\mathbf{I}_2 - 20\mathbf{I}_3 = 115 \qquad (1)$$

$$-2\mathbf{I}_1 + 33\mathbf{I}_2 - 30\mathbf{I}_3 = 115 \qquad (2)$$

$$-20\mathbf{I}_1 - 30\mathbf{I}_2 + (65 + j18.85)\mathbf{I}_3 = 0 \qquad (3)$$

In matrix form,

$$\begin{bmatrix} 23 & -2 & -20 \\ -2 & 33 & -30 \\ -20 & -30 & 65 + j18.85 \end{bmatrix} \begin{bmatrix} \mathbf{I}_1 \\ \mathbf{I}_2 \\ \mathbf{I}_3 \end{bmatrix} = \begin{bmatrix} 115 \\ 115 \\ 0 \end{bmatrix}$$

$$\Delta = 12{,}775 + j14{,}232, \qquad \Delta_1 = (115)(1975 + j659.8)$$

$$\Delta_2 = (115)(1825 + j471.3), \qquad \Delta_3 = (115)(1450)$$

$$\mathbf{I}_1 = \frac{\Delta_1}{\Delta} = \frac{115 \times 2082\angle 18.47^\circ}{19214\angle 48.09^\circ} = 12.52\angle -29.62^\circ$$

$$\mathbf{I}_2 = \frac{\Delta_2}{\Delta} = \frac{115 \times 1884.9\angle 14.48^\circ}{19124\angle 48.09^\circ} = 11.33\angle -33.61^\circ$$

$$\mathbf{I}_n = \mathbf{I}_2 - \mathbf{I}_1 = \frac{\Delta_2 - \Delta_1}{\Delta} = \frac{(115)(-150 - j188.5)}{12{,}775 + j14{,}231.75} = \mathbf{1.448\angle -176.6^\circ \text{ A}}$$

$$\mathbf{S_1 = V_1 I_1^* = (115)(12.52\angle 29.62^\circ) = [1.252 + \mathit{j}0.7116]\ \mathit{kVA}}$$

$$\mathbf{S}_2 = \mathbf{V}_2 \mathbf{I}_2^* = (115)(1.33\angle 33.61^\circ) = \mathbf{[1.085 + \mathit{j}0.7212]\ \mathit{kVA}}$$

www.konkur.in

Chapter 13, Solution 1.

For coil 1, $L_1 - M_{12} + M_{13} = 12 - 8 + 4 = 8$

For coil 2, $L_2 - M_{21} - M_{23} = 16 - 8 - 10 = -2$

For coil 3, $L_3 + M_{31} - M_{32} = 20 + 4 - 10 = 14$

$$L_T = 8 - 2 + 14 = 20H$$

or $$L_T = L_1 + L_2 + L_3 - 2M_{12} - 2M_{23} + 2M_{13}$$

$$L_T = 12 + 16 + 20 - 2x8 - 2x10 + 2x4 = 48 - 16 - 20 + 8$$

$$= \mathbf{20H}$$

www.konkur.in

Chapter 13, Solution 2.

Using Fig. 13.73, design a problem to help other students to better understand mutual inductance.

Although there are many ways to solve this problem, this is an example based on the same kind of problem asked in the third edition.

Problem

Determine the inductance of the three series-connected inductors of Fig. 13.73.

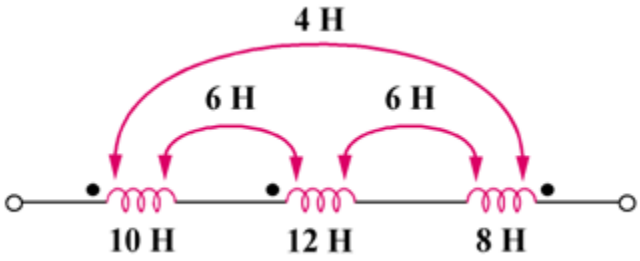

Figure 13.73

Solution

$L = L_1 + L_2 + L_3 + 2M_{12} - 2M_{23} - 2M_{31}$

$= 10 + 12 + 8 + 2x6 - 2x6 - 2x4$

$= \mathbf{22H}$

www.konkur.in

Chapter 13, Solution 3.

$L_1 + L_2 + 2M = 500$ mH (1)

$L_1 + L_2 - 2M = 300$ mH (2)

Adding (1) and (2),

$$2L_1 + 2L_2 = 800 \text{ mH}$$

But, $L_1 = 3L_2$, or $8L_2 + 400$, and $L_2 =$ **100 mH**

$$L_1 = 3L_2 = \mathbf{300\ mH}$$

From (2), $150 + 50 - 2M = 150$ leads to $M =$ **50 mH**

$$k = M/\sqrt{L_1 L_2} = 50/\sqrt{100x300} = \mathbf{0.2887}$$

300 mH, 100 mH, 50 mH, 0.2887

www.konkur.in

Chapter 13, Solution 4.

(a) For the series connection shown in Figure (a), the current I enters each coil from its dotted terminal. Therefore, the mutually induced voltages have the same sign as the self-induced voltages. Thus,

$$L_{eq} = \mathbf{L_1 + L_2 + 2M}$$

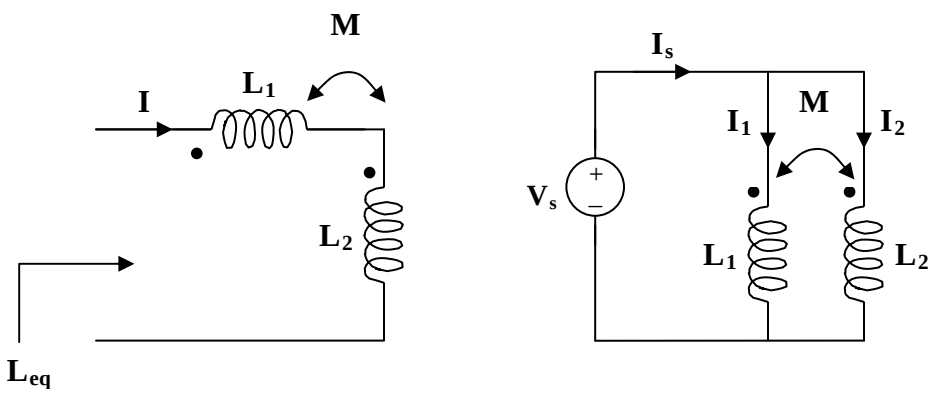

(a) **(b)**

(b) For the parallel coil, consider Figure (b).

$$I_s = I_1 + I_2 \quad \text{and} \quad Z_{eq} = V_s/I_s$$

Applying KVL to each branch gives,

$$V_s = j\omega L_1 I_1 + j\omega M I_2 \qquad (1)$$

$$V_s = j\omega M I_1 + j\omega L_2 I_2 \qquad (2)$$

or

$$\begin{bmatrix} V_s \\ V_s \end{bmatrix} = \begin{bmatrix} j\omega L_1 & j\omega M \\ j\omega M & j\omega L_2 \end{bmatrix} \begin{bmatrix} I_1 \\ I_2 \end{bmatrix}$$

$$\Delta = -\omega^2 L_1 L_2 + \omega^2 M^2, \quad \Delta_1 = j\omega V_s(L_2 - M), \quad \Delta_2 = j\omega V_s(L_1 - M)$$

$$I_1 = \Delta_1/\Delta, \quad \text{and} \quad I_2 = \Delta_2/\Delta$$

$$I_s = I_1 + I_2 = (\Delta_1 + \Delta_2)/\Delta = j\omega(L_1 + L_2 - 2M)V_s/(-\omega^2(L_1L_2 - M^2))$$
$$= (L_1 + L_2 - 2M)V_s/(j\omega(L_1L_2 - M^2))$$

$$Z_{eq} = V_s/I_s = j\omega(L_1L_2 - M^2)/(L_1 + L_2 - 2M) = j\omega L_{eq}$$

i.e., $$L_{eq} = \mathbf{(L_1L_2 - M^2)/(L_1 + L_2 - 2M)}$$

www.konkur.in

Chapter 13, Solution 5.

(a) If the coils are connected in series,

$$L = L_1 + L_2 + 2M = 50 + 120 + 2(0.5)\sqrt{50x120} = \mathbf{247.4\ mH}$$

(b) If they are connected in parallel,

$$L = \frac{L_1 L_2 - M^2}{L_1 + L_2 - 2M} = \frac{50x120 - 38.72^2}{50 + 120 - 2x38.72}\ \text{mH} = \mathbf{48.62\ mH}$$

(a) 247.4 mH, (b) 48.62 mH

www.konkur.in

Chapter 13, Solution 6.

$M = k\sqrt{L_1 L_2} = 0.6\sqrt{40x5} = 8.4853 \text{ mH}$

$40mH \longrightarrow j\omega L = j2000x40x10^{-3} = j80$

$5mH \longrightarrow j\omega L = j2000x5x10^{-3} = j10$

$8.4853mH \longrightarrow j\omega M = j2000x8.4853x10^{-3} = j16.97$

We analyze the circuit below.

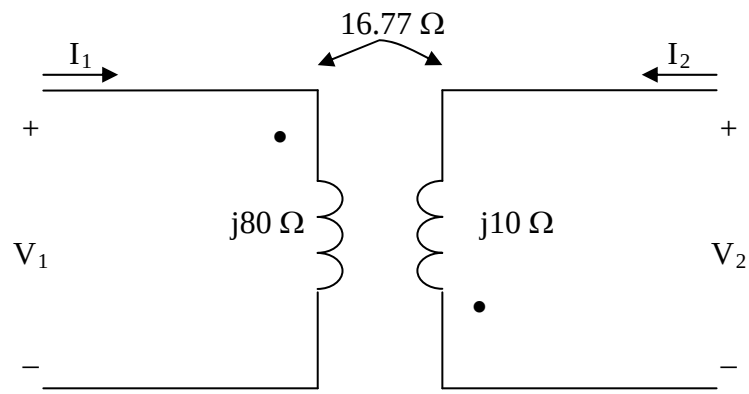

$$V_1 = j80I_1 - j16.97I_2 \quad (1)$$
$$V_2 = -16.97I_1 + j10I_2 \quad (2)$$

But, $V_1 = 20\angle 0^\circ$ V and $I_2 = 4\angle -90^\circ$ A. Substituting these into (1) produces

$I_1 = [(V_1+j16.97I_2)/j80] = [(20+j16.97(-j4))/j80] = 1.0986\angle -90^\circ$ A or

i_1 = **1.0986sin(ωt) A**

From (2), $V_2 = -16.97x(-j1.0986) + j10(-j4) = 40 + j18.643 = 44.13\angle 25^\circ$ or

v_2 = **44.13cos(ωt+25°) V**.

www.konkur.in

Chapter 13, Solution 7.

We apply mesh analysis to the circuit as shown below.

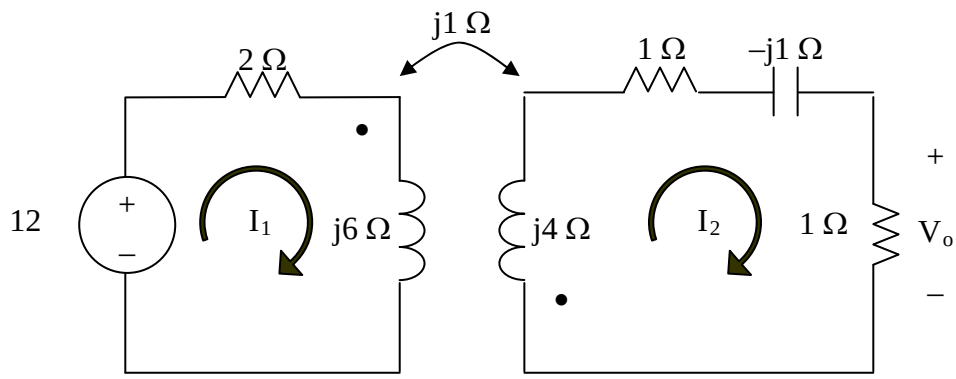

For mesh 1,

$$(2+j6)I_1 + jI_2 = 24$$

For mesh 2,

$$jI_1 + (2-j+j4)I_2 = jI_1 + (2+j3)I_2 = 0 \text{ or } I_1 = (-3+j2)I_2$$

Substituting into the first equation results in $I_2 = (-0.8762+j0.6328)$ A.

$$V_o = I_2 x1 = \mathbf{1.081\angle 144.16^\circ\ V}.$$

www.konkur.in

Chapter 13, Solution 8.

$$2H \longrightarrow j\omega L = j4x2 = j8$$
$$1H \longrightarrow j\omega L = j4x1 = j4$$

Consider the circuit below.

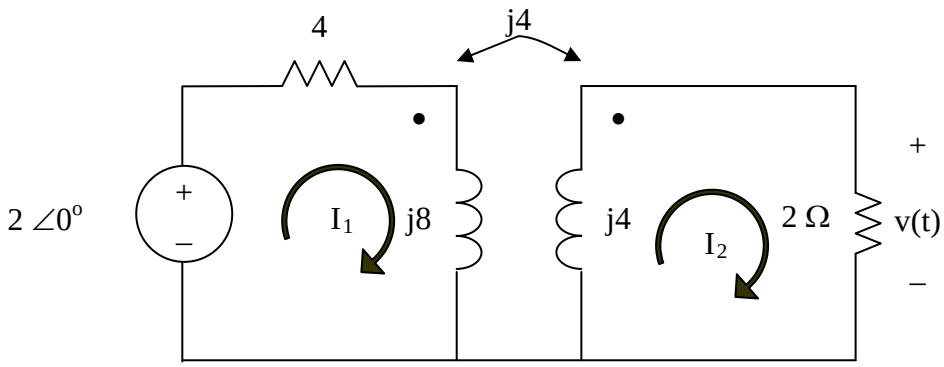

$$2 = (4 + j8)I_1 - j4I_2 \qquad (1)$$
$$0 = -j4I_1 + (2 + j4)I_2 \qquad (2)$$

In matrix form, these equations become

$$\begin{bmatrix} 2 \\ 0 \end{bmatrix} = \begin{bmatrix} 4 + j8 & -j4 \\ -j4 & 2 + j4 \end{bmatrix} \begin{bmatrix} I_1 \\ I_2 \end{bmatrix}$$

Solving this leads to

$I_2 = 0.2353 - j0.0588$

$V = 2I_2 = 0.4851 \angle -14.04^o$

Thus,

v(t) = **485.1cos(4t–14.04°) mV**

www.konkur.in

Chapter 13, Solution 9.

Consider the circuit below.

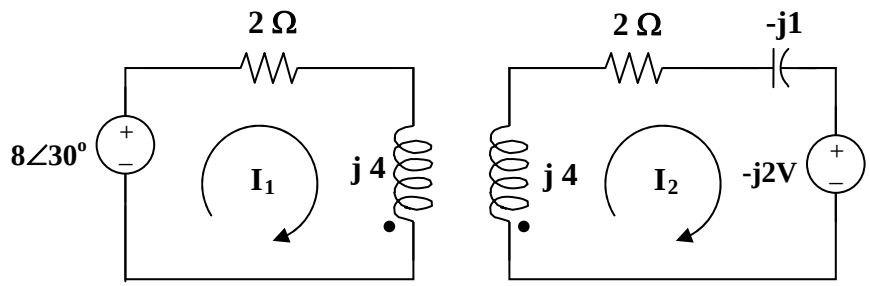

For loop 1,

$$8\angle 30° = (2 + j4)I_1 - jI_2 \qquad (1)$$

For loop 2, $(j4 + 2 - j)I_2 - jI_1 + (-j2) = 0$

or $$I_1 = (3 - j2)i_2 - 2 \qquad (2)$$

Substituting (2) into (1), $8\angle 30° + (2 + j4)2 = (14 + j7)I_2$

$$I_2 = (10.928 + j12)/(14 + j7) = 1.037\angle 21.12°$$

$$V_x = 2I_2 = \mathbf{2.074\angle 21.12°\ V}$$

www.konkur.in

Chapter 13, Solution 10.

$$2H \longrightarrow j\omega L = j2x2 = j4$$
$$0.5H \longrightarrow j\omega L = j2x0.5 = j$$
$$\frac{1}{2}F \longrightarrow 1/j\omega C = \frac{1}{j2x1/2} = -j$$

Consider the circuit below.

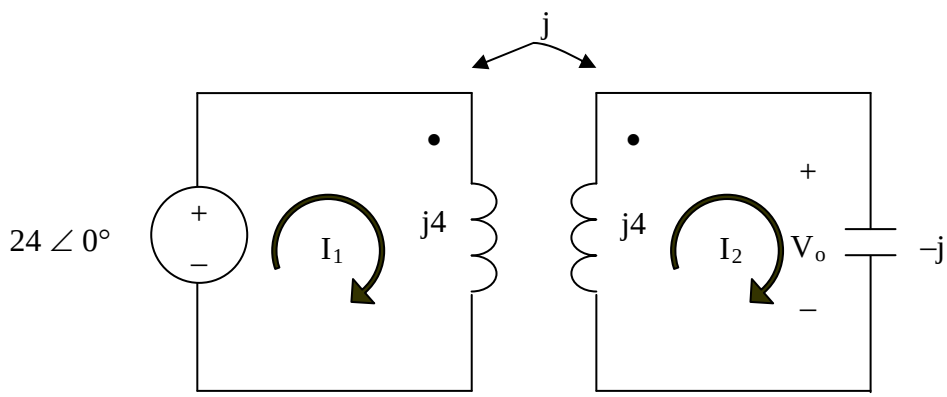

$$24 = j4I_1 - jI_2 \qquad (1)$$
$$0 = -jI_1 + (j4 - j)I_2 \longrightarrow 0 = -I_1 + 3I_2 \qquad (2)$$

In matrix form,

$$\begin{bmatrix} 24 \\ 0 \end{bmatrix} = \begin{bmatrix} j4 & -j \\ -1 & 3 \end{bmatrix} \begin{bmatrix} I_1 \\ I_2 \end{bmatrix}$$

Solving this,

$$I_2 = -j2.1818, \qquad V_o = -jI_2 = -2.1818$$

$$v_o(t) = \mathbf{-2.1818\cos 2t\ V}$$

www.konkur.in

Chapter 13, Solution 11.

$$800mH \longrightarrow j\omega L = j600x800x10^{-3} = j480$$
$$600mH \longrightarrow j\omega L = j600x600x10^{-3} = j360$$
$$1200mH \longrightarrow j\omega L = j600x1200x10^{-3} = j720$$
$$12\mu F \rightarrow \frac{1}{j\omega C} = \frac{-j}{600x12x10^{-6}} = -j138.89$$

After transforming the current source to a voltage source, we get the circuit shown below.

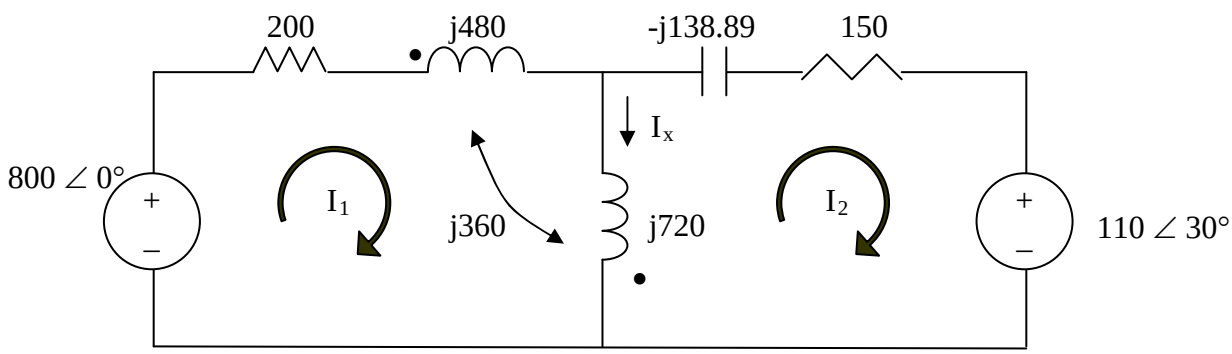

For mesh 1,

$$800 = (200 + j480 + j720)I_1 + j360I_2 - j720I_2 \text{ or}$$
$$800 = (200 + j1200)I_1 - j360I_2 \qquad (1)$$

For mesh 2,

$$110\angle 30^\circ + 150 - j138.89 + j720)I_2 + j360I_1 = 0 \text{ or}$$
$$-95.2628 - j55 = -j360I_1 + (150 + j581.1)I_2 \qquad (2)$$

In matrix form,

$$\begin{bmatrix} 800 \\ -95.2628 - j55 \end{bmatrix} = \begin{bmatrix} 200 + j1200 & -j360 \\ -j360 & 150 + j581.1 \end{bmatrix} \begin{bmatrix} I_1 \\ I_2 \end{bmatrix}$$

Solving this using MATLAB leads to:

```
>> Z = [(200+1200i),-360i;-360i,(150+581.1i)]
Z =
  1.0e+003 *
   0.2000 + 1.2000i        0 - 0.3600i
```

www.konkur.in

```
      0 - 0.3600i   0.1500 + 0.5811i
>> V = [800;(-95.26-55i)]
V =
  1.0e+002 *
   8.0000
  -0.9526 - 0.5500i
>> I = inv(Z)*V
I =
   0.1390 - 0.7242i
   0.0609 - 0.2690i
```

$I_x = I_1 - I_2 = 0.0781 - j0.4552 = 0.4619\angle{-80.26^\circ}$.

Hence,

$i_x(t) =$ **461.9cos(600t–80.26˚) mA**.

www.konkur.in

Chapter 13, Solution 12.

Let $\omega = 1$.

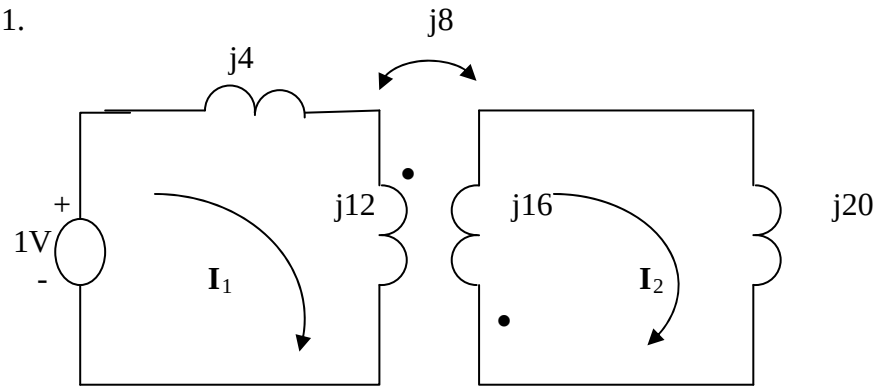

Applying KVL to the loops,

$$1 = j16I_1 + j8I_2 \qquad (1)$$
$$0 = j8I_1 + j36I_2 \qquad (2)$$

Solving (1) and (2) gives $\mathbf{I}_1 = -j0.0703$. Thus

$$Z = \frac{1}{I_1} = jL_{eq} \quad \longrightarrow \quad L_{eq} = \frac{1}{jI_1} = \mathbf{14.225\ H}.$$

We can also use the equivalent T-section for the transform to find the equivalent inductance.

www.konkur.in

Chapter 13, Solution 13.

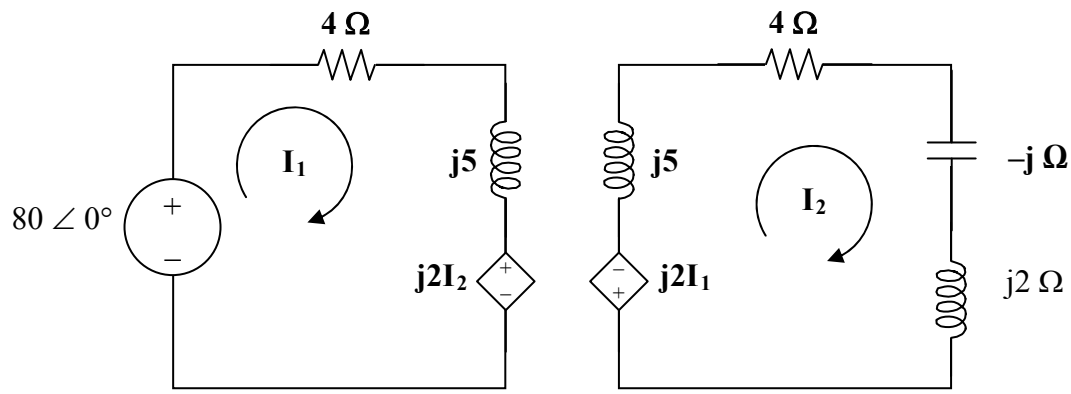

$-80 + (4+j5)\mathbf{I_1} + j2\mathbf{I_2} = 0$ or $(4+j5)\mathbf{I_1} + j2\mathbf{I_2} = 80$

$j2\mathbf{I_1} + (4+j6)\mathbf{I_2} = 0$ or $\mathbf{I_2} = [-j2/(7.2111\angle 56.31°)]\mathbf{I_1} = (0.27735\angle -146.31°)\mathbf{J_1}$

$[4+j5 + j2(-0.230769-j0.153846)]I_1 = [4+j5+0.307692-j0.461538]I_1 = 80$

$[4.307692+j4.538462]I_1 = 80$ or $I_1 = 80/(6.2573\angle 46.494°)$

$= 12.78507\angle -46.494°$ A.

$$Z_{in} = 80/I_1 = 6.2573\angle 46.494°\ \Omega = \mathbf{(4.308 + j4.538)\ \Omega}$$

An alternate approach would be to use the equation,

$$\mathbf{Z_{in}} = 4 + j(5) + \frac{4}{j5 + 4 - j + j2} = 4 + j5 + \frac{4}{7.2111\angle 56.31°}$$

www.konkur.in

$= 4+j5+0.5547\angle{-56.31°} = 4+0.30769+j(5-0.46154)$

$= \mathbf{[4.308+j4.538]\ \Omega}$.

www.konkur.in

Chapter 13, Solution 14.

To obtain V_{Th}, convert the current source to a voltage source as shown below.

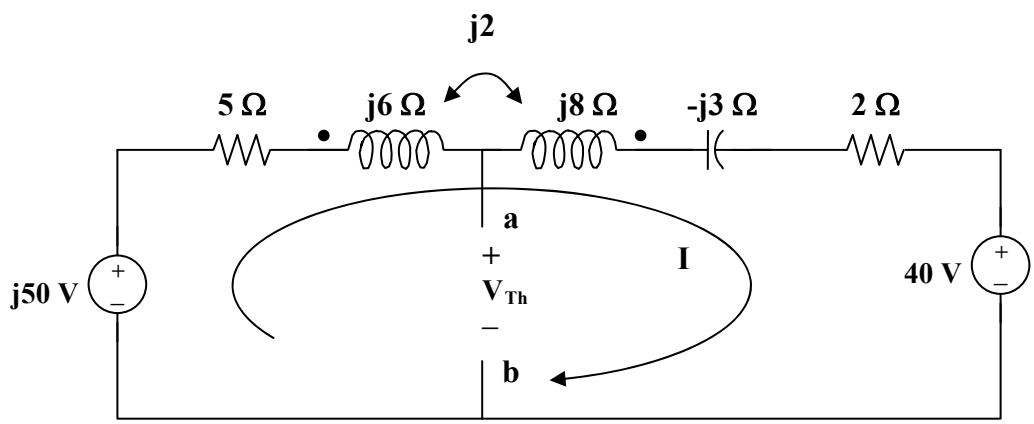

Note that the two coils are connected series aiding.

$$\omega L = \omega L_1 + \omega L_2 - 2\omega M$$

$$j\omega L = j6 + j8 - j4 = j10$$

Thus, $$-j50 + (5 + j10 - j3 + 2)I + 40 = 0$$

$$I = (-40 + j50)/(7 + j7)$$

But, $$-j50 + (5 + j6)I - j2I + V_{Th} = 0$$

$$V_{Th} = j50 - (5 + j4)I = j50 - (5 + j4)(-40 + j50)/(7 + j7)$$

$$V_{Th} = \mathbf{26.74\angle 34.11^\circ\ V}$$

To obtain Z_{Th}, we set all the sources to zero and insert a 1-A current source at the terminals a–b as shown below.

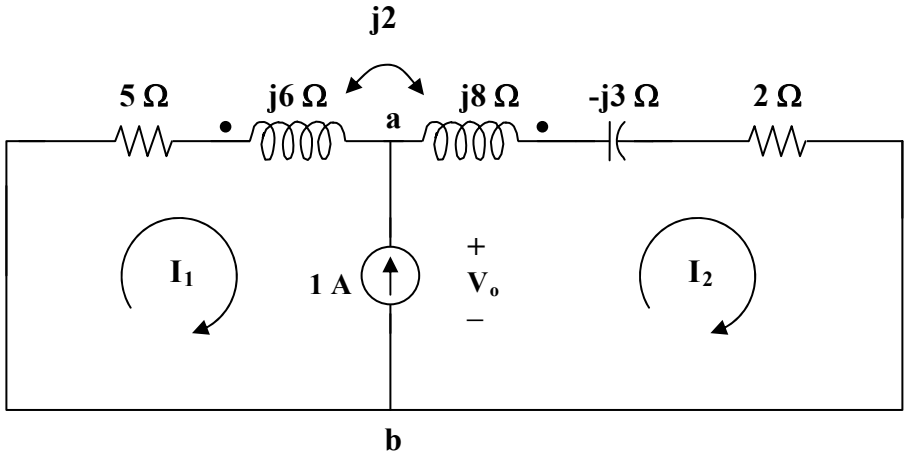

www.konkur.in

Clearly, we now have only a super mesh to analyze.

$$(5 + j6)I_1 - j2I_2 + (2 + j8 - j3)I_2 - j2I_1 = 0$$

$$(5 + j4)I_1 + (2 + j3)I_2 = 0 \qquad (1)$$

But, $$I_2 - I_1 = 1 \text{ or } I_2 = I_1 - 1 \qquad (2)$$

Substituting (2) into (1), $$(5 + j4)I_1 + (2 + j3)(1 + I_1) = 0$$

$$I_1 = -(2 + j3)/(7 + j7)$$

Now, $$((5 + j6)I_1 - j2I_1 + V_o = 0$$

$$V_o = -(5 + j4)I_1 = (5 + j4)(2 + j3)/(7 + j7) = (-2 + j23)/(7 + j7) = 2.332\angle 50°$$

$$Z_{Th} = V_o/1 = \mathbf{2.332\angle 50°\ \Omega}.$$

www.konkur.in

Chapter 13, Solution 15.

The first step is to replace the mutually coupled circuits with the equivalent circuits using dependent sources. To obtain I_N, short-circuit a–b as shown in Figure (a) and solve for I_{sc}.

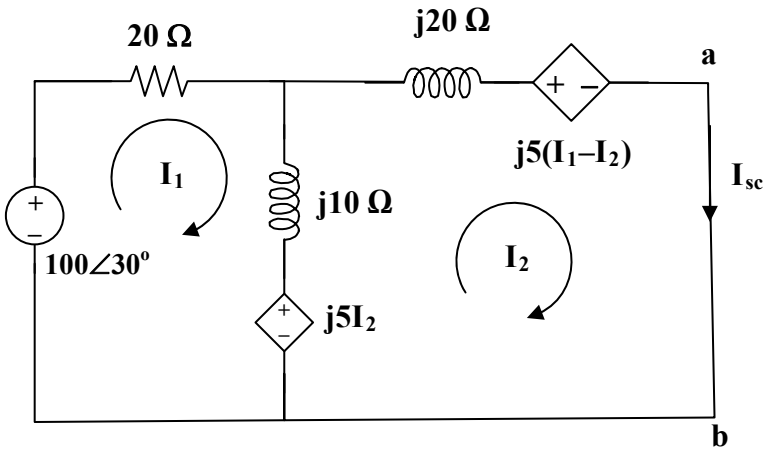

(a)

Now all we need to do is to write our two mesh equations.

Loop 1. $-100\angle 60^\circ + 20\mathbf{I_1} + j10(\mathbf{I_1}-\mathbf{I_2}) + j5\mathbf{I_2} = 0$ or $(20+j10)\mathbf{I_1} - j5\mathbf{I_2} = 100\angle 60^\circ$
or $(4+j2)\mathbf{I_1} - j\mathbf{I_2} = 20\angle 30^\circ$

Loop 2. $-j5\mathbf{I_2} + j10(\mathbf{I_2}-\mathbf{I_1}) + j20\mathbf{I_2} + j5(\mathbf{I_1}-\mathbf{I_2}) = 0$ or $-j5\mathbf{I_1} + j20\mathbf{I_2} = 0$ or $\mathbf{I_1} = 4\mathbf{I_2}$

Substituting back into the first equation, we get, $(4+j2)4\mathbf{I_2} - j\mathbf{I_2} = 20\angle 30^\circ$ or $(16+j7)\mathbf{I_2} = 20\angle 30^\circ$.

Now to solve for $\mathbf{I_2} = \mathbf{I_{sc}} = \mathbf{I_N} = (20\angle 30^\circ)/(16+j7) = (20\angle 30^\circ)/(17.464\angle 23.63^\circ) = \mathbf{1.1452\angle 6.37^\circ}$ **A**.

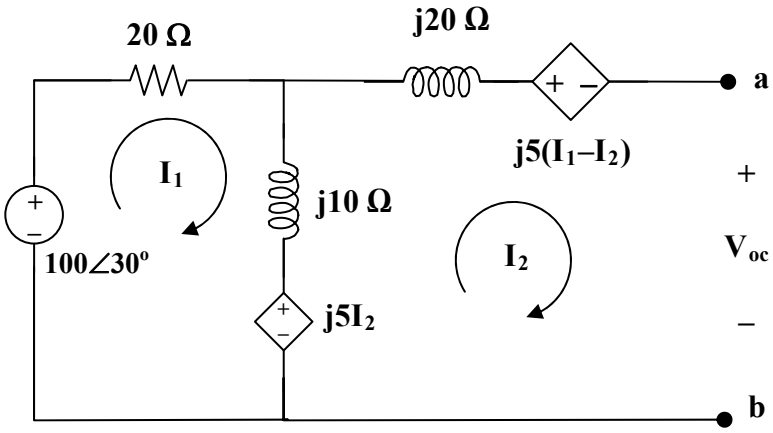

(b)

To solve for $\mathbf{Z_N} = \mathbf{Z_{eq}} = \mathbf{V_{oc}}/\mathbf{I_{sc}}$, all we need to do is to solve for $\mathbf{V_{oc}}$. In circuit (b) we note that $\mathbf{I_2} = 0$ and we get the mesh equation, $-100\angle 30^\circ + (20+j10)\mathbf{I_1} = 0$ or $\mathbf{I_1} = (100\angle 30^\circ)/(22.36\angle 26.57^\circ) = 4.472\angle 3.43^\circ$ A. $\mathbf{V_{oc}} = j10\mathbf{I_1} - j5\mathbf{I_1}$ (induced voltage due to the mutual coupling) $= j5\mathbf{I_1} = 22.36\angle 93.43^\circ$ V.

$$\mathbf{Z_{eq}} = \mathbf{Z_N} = (22.36\angle 93.43^\circ)/(1.1452\angle 6.37^\circ) = \mathbf{19.525\angle 87.06^\circ\ \Omega}.$$

or **[1.0014+j19.498] Ω**.

www.konkur.in

Chapter 13, Solution 16.

To find $\mathbf{I}_N$, we short-circuit a-b.

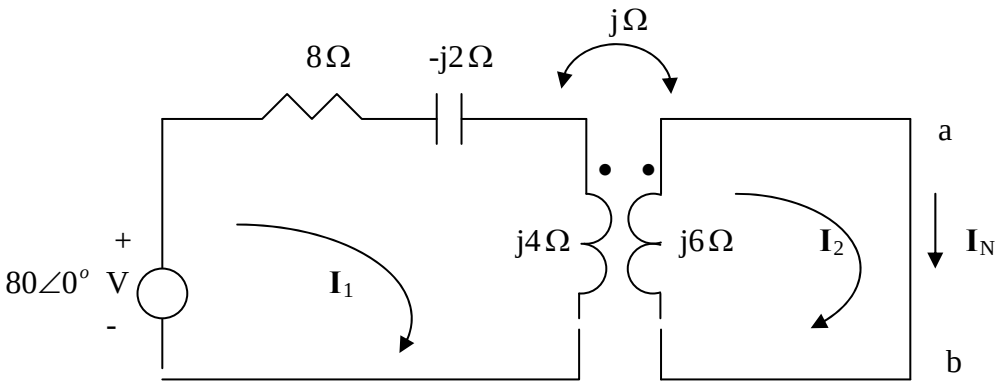

$$-80 + (8 - j2 + j4)I_1 - jI_2 = 0 \quad \longrightarrow \quad (8 + j2)I_1 - jI_2 = 80 \qquad (1)$$

$$j6I_2 - jI_1 = 0 \quad \longrightarrow \quad I_1 = 6I_2 \qquad (2)$$

Solving (1) and (2) leads to

$$I_N = I_2 = \frac{80}{48 + j11} = 1.584 - j0.362 = \mathbf{1.6246\angle{-12.91}°\ A}$$

To find Z_N, insert a 1-A current source at terminals a-b. Transforming the current source to voltage source gives the circuit below.

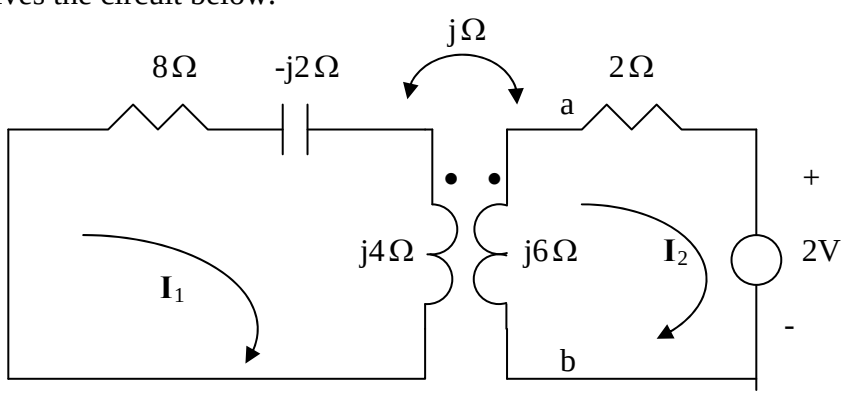

$$0 = (8 + j2)I_1 - jI_2 \quad \longrightarrow \quad I_1 = \frac{jI_2}{8 + j2}$$

www.konkur.in

$= [j/(8.24621\angle 14.036°)]\mathbf{I_2} = 0.121268\angle 75.964°\mathbf{I_2}$

$= (0.0294113+j0.117647)\mathbf{I_2}$ (3)

$2 + (2 + j6)I_2 - jI_1 = 0$ (4)

Solving (3) and (4) leads to $(2+j6)\mathbf{I_2} - j(0.0294113+j0.117647)\mathbf{I_2} = -2$ or

$(2.117647+j5.882353)\mathbf{I_2} = -2$ or $\mathbf{I_2} = -2/(6.25192\angle 70.201°) = 0.319902\angle 109.8°$.

$V_{ab} = 2(1+ \mathbf{I_2}) = 2(1-0.1083629+j0.30099) = (1.78327+j0.601979)$ V $= 1\mathbf{Z_{eq}}$ or

$$\mathbf{Z_{eq}} = (1.78327+j0.601979) = \mathbf{1.8821\angle 18.65°\ \Omega}$$

An alternate approach would be to calculate the open circuit voltage.

$-80 + (8+j2)\mathbf{I_1} - j\mathbf{I_2} = 0$ or $(8+j2)\mathbf{I_1} - j\mathbf{I_2} = 80$ (5)

$(2+j6)\mathbf{I_2} - j\mathbf{I_1} = 0$ or $\mathbf{I_1} = (2+j6)\mathbf{I_2}/j = (6-j2)\mathbf{I_2}$ (6)

Substituting (6) into (5) we get,

$(8.24621\angle 14.036°)(6.32456\angle -18.435°)\mathbf{I_2} - jI_2 = 80$ or

$[(52.1536\angle -4.399°)-j]I_2 = [52-j5]I_2 = (52.2398\angle -5.492°)I_2 = 80$ or

www.konkur.in

$I_2 = 1.5314\angle 5.492°$ A and $V_{oc} = 2I_2 = 3.0628\angle 5.492°$ V which leads to,

$Z_{eq} = V_{oc}/I_{sc} = (3.0628\angle 5.492°)/(1.6246\angle -12.91°) = \mathbf{1.8853\angle 18.4°\ \Omega}$

This is in good agreement with what we determined before.

www.konkur.in

Chapter 13, Solution 17.

$$j\omega L = j40 \longrightarrow \omega = \frac{40}{L} = \frac{40}{15x10^{-3}} = 2667 \text{ rad/s}$$

$$M = k\sqrt{L_1 L_2} = 0.6\sqrt{12x10^{-3}x30x10^{-3}} = 11.384 \text{ mH}$$

If 15 mH $\longrightarrow$ 40 Ω

Then 12 mH $\longrightarrow$ 32 Ω
30 mH $\longrightarrow$ 80 Ω
11.384 mH $\longrightarrow$ 30.36 Ω

The circuit becomes that shown below.

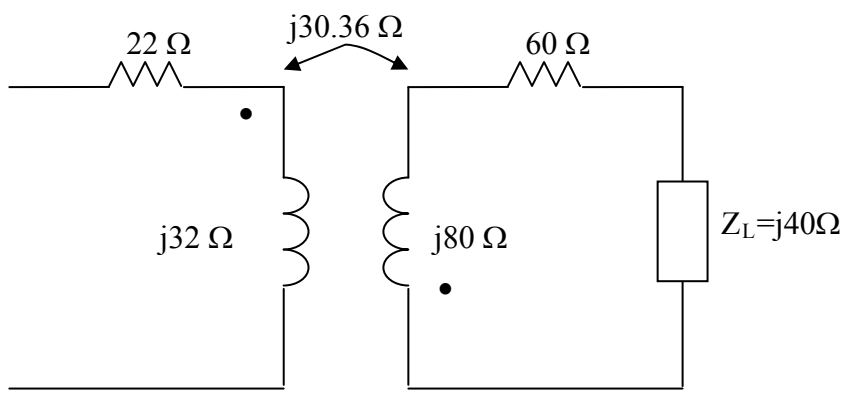

$$Z_{in} = 22 + j32 + \frac{\omega^2 M^2}{j80 + 60 + j40} = 22 + j32 + \frac{(30.36)^2}{60 + j120}$$

$$= 22 + j32 + \frac{921.7}{134.16\angle 63.43°} = 22 + j32 + 6.87\angle -63.43° = 22 + j32 + 3.073 - j6.144$$

$$= \mathbf{[25.07 + j25.86]\ \Omega}.$$

www.konkur.in

Chapter 13, Solution 18.

Replacing the mutually coupled circuit with the dependent source equivalent we get,

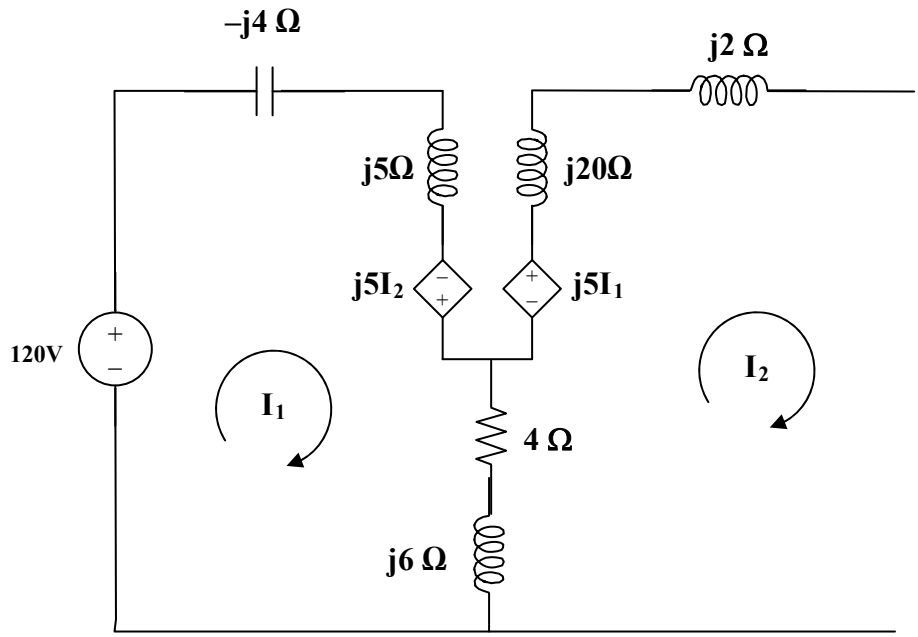

Now all we need to do is to find $\mathbf{V_{oc}}$ and $\mathbf{I_{sc}}$. To calculate the open circuit voltage, we note that I_2 is equal to zero. Thus,

$$-120 + (4 + j(-4+5+6))\mathbf{I_1} = 0 \text{ or } \mathbf{I_1} = 120/(4+j7) = 120/(8.06226\angle 60.255°)$$

$$= 14.8842\angle -60.255°.$$

$$\mathbf{V_{oc}} = \mathbf{V_{Thev}} = j5\mathbf{I_1} + (4+j6)\mathbf{I_1} = (4+j11)\mathbf{I_1}$$

$$= (11.7047\angle 70.017°)(14.8842\angle -60.255°) = \mathbf{174.22\angle 9.76°\ V}$$

To find the short circuit current ($\mathbf{I_{sc} = I_2}$), we need to solve the following mesh equations,

www.konkur.in

Mesh 1

$$-120 + (-j4+j5)\mathbf{I_1} - j5\mathbf{I_2} + (4+j6)(\mathbf{I_1}-\mathbf{I_2}) = 0 \text{ or}$$

$$(4+j7)\mathbf{I_1} - (4+j11)\mathbf{I_2} = 120 \qquad (1)$$

Mesh 2

$$(4+j6)(\mathbf{I_2}-\mathbf{I_1}) - j5\mathbf{I_1} + j22\mathbf{I_2} = 0 \text{ or } -(4+j11)\mathbf{I_1} + (4+j28)\mathbf{I_2} = 0 \text{ or}$$

$$\mathbf{I_1} = (28.2843\angle 81.87°)\mathbf{I_2}/(11.7047\angle 70.0169°) = (2.4165\angle 11.853°)\mathbf{I_2}$$

Substituting this into equation (1) we get,

$$(8.06226\angle 60.255°)(2.4165\angle 11.853°)\mathbf{I_2} - (4+j11)\mathbf{I_2} = 120 \text{ or}$$

$$[(19.4825\angle 72.108°) - 4 - j11]I_2 = 120 \text{ and}$$

$$[5.9855+j18.5403-4-j11]I_2 = (1.9855+j7.5403)I_2 = 120 \text{ or}$$

$$\mathbf{I_2} = \mathbf{I_{sc}} = 120/(7.79733\angle 75.248°) = 15.3899\angle -75.248° \text{ A}$$

Checking using MATLAB we get,

```
>> Z = [(4+7j) (-4-11j);(-4-11j) (4+28j)]

Z =

   4.0000 + 7.0000i  -4.0000 -11.0000i
  -4.0000 -11.0000i   4.0000 +28.0000i

>> V = [120;0]

V =

   120
     0
```

www.konkur.in

```
>> I = inv(Z)*V

I =

  16.6551 -33.2525i
```

(I_1)

3.9188 -14.8829i ($I_2 = I_{sc}$) = 15.3902∠−75.248° (answer checks)

Finally,

$$Z_{eq} = V_{Thev}/I_{sc} = (174.22\angle 9.76°)/(15.3899\angle -75.248°)$$

$$= \mathbf{(11.32\angle 85.01°)\ \Omega}$$

www.konkur.in

Chapter 13, Solution 19.

$X_{La} = X_{L1} - (-X_M) = 40 + 25 = 65\ \Omega$ and $X_{Lb} = X_{L2} - (-X_M) = 40 + 25 = 55\ \Omega$.

Finally, $X_C = X_M$ thus, the T-section is as shown below.

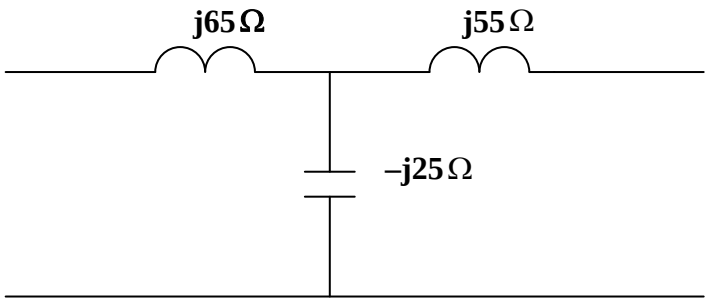

www.konkur.in

Chapter 13, Solution 20.

Transform the current source to a voltage source as shown below.

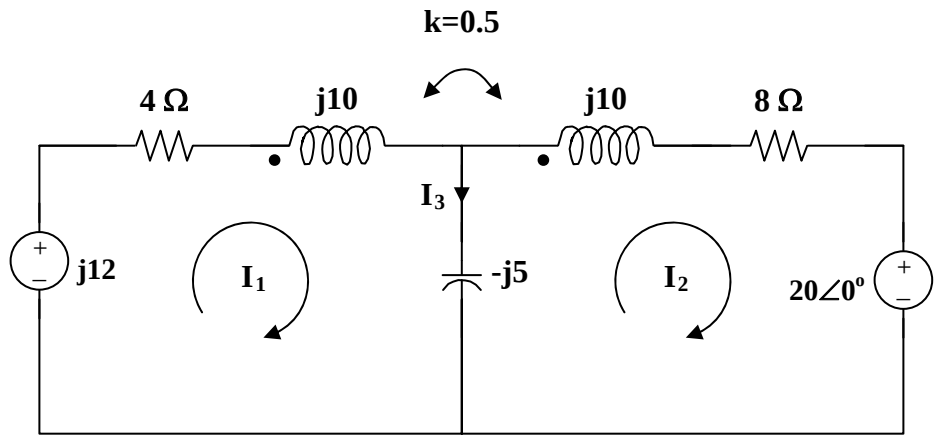

$$k = M/\sqrt{L_1L_2} \quad \text{or} \quad M = k\sqrt{L_1L_2}$$

$$\omega M = k\sqrt{\omega L_1 \omega L_2} = 0.5(10) = 5$$

For mesh 1, $j12 = (4 + j10 - j5)I_1 + j5I_2 + j5I_2 = (4 + j5)I_1 + j10I_2$ (1)

For mesh 2, $0 = 20 + (8 + j10 - j5)I_2 + j5I_1 + j5I_1$

$$-20 = +j10I_1 + (8 + j5)I_2 \qquad (2)$$

From (1) and (2),
$$\begin{bmatrix} j12 \\ 20 \end{bmatrix} = \begin{bmatrix} 4 + j5 & +j10 \\ +j10 & 8 + j5 \end{bmatrix} \begin{bmatrix} I_1 \\ I_2 \end{bmatrix}$$

$$\Delta = 107 + j60, \quad \Delta_1 = -60 - j296, \quad \Delta_2 = 40 - j100$$

$$I_1 = \Delta_1/\Delta = \mathbf{2.462\angle 72.18°\ A}$$

$$I_2 = \Delta_2/\Delta = \mathbf{878\angle -97.48°\ mA}$$

$$I_3 = I_1 - I_2 = \mathbf{3.329\angle 74.89°\ A}$$

$$i_1 = 2.462\cos(1000t + 72.18°)\ A$$

$$i_2 = 0.878\cos(1000t - 97.48°)\ A$$

At $t = 2$ ms, $1000t = 2$ rad $= 114.6°$

$$i_1(0.002) = 2.462\cos(114.6° + 72.18°) = -2.445A$$

www.konkur.in

$$-2.445$$

$$i_2 = 0.878\cos(114.6° - 97.48°) = -0.8391$$

The total energy stored in the coupled coils is

$$w = 0.5L_1 i_1^2 + 0.5L_2 i_2^2 + Mi_1 i_2$$

Since $\omega L_1 = 10$ and $\omega = 1000$, $L_1 = L_2 = 10$ mH, $M = 0.5L_1 = 5$mH

$$w = 0.5(0.01)(-2.445)^2 + 0.5(0.01)(-0.8391)^2 + 0.05(-2.445)(-0.8391)$$

$$\mathbf{w = 43.67\ mJ}$$

www.konkur.in

Chapter 13, Solution 21.

Using Fig. 13.90, design a problem to help other students to better understand energy in a coupled circuit.

Although there are many ways to solve this problem, this is an example based on the same kind of problem asked in the third edition.

Problem

Find $\mathbf{I}_1$ and $\mathbf{I}_2$ in the circuit of Fig. 13.90. Calculate the power absorbed by the 4-Ω resistor.

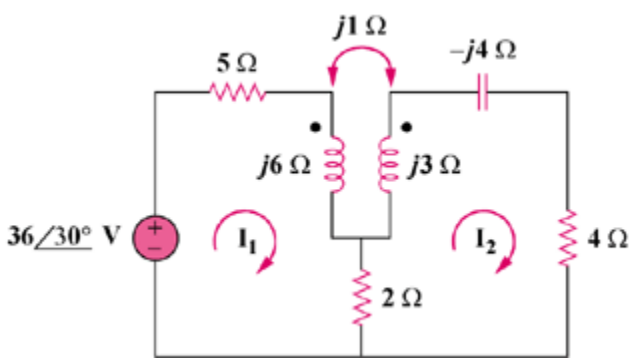

Figure 13.90

Solution

For mesh 1, $36\angle 30° = (7 + j6)I_1 - (2 + j)I_2$ (1)

For mesh 2, $0 = (6 + j3 - j4)I_2 - 2I_1 - jI_1 = -(2 + j)I_1 + (6 - j)I_2$ (2)

Placing (1) and (2) into matrix form, $\begin{bmatrix} 36\angle 30° \\ 0 \end{bmatrix} = \begin{bmatrix} 7 + j6 & -2 - j \\ -2 - j & 6 - j \end{bmatrix} \begin{bmatrix} I_1 \\ I_2 \end{bmatrix}$

$$\Delta = 45 + j25 = 51.48\angle 29.05°, \quad \Delta_1 = (6 - j)36\angle 30° = 219\angle 20.54°$$

$\Delta_2 = (2 + j)36\angle 30° = 80.5\angle 56.57°$, $I_1 = \Delta_1/\Delta =$ **4.254∠–8.51° A** , $I_2 = \Delta_2/\Delta =$ **1.5637∠27.52° A**

Power absorbed by the 4-ohm resistor,

$$= 0.5(I_2)^2 4 = 2(1.5637)^2 = \mathbf{4.89\ watts}$$

www.konkur.in

Chapter 13, Solution 22.

With more complex mutually coupled circuits, it may be easier to show the effects of the coupling as sources in terms of currents that enter or leave the dot side of the coil. Figure 13.85 then becomes,

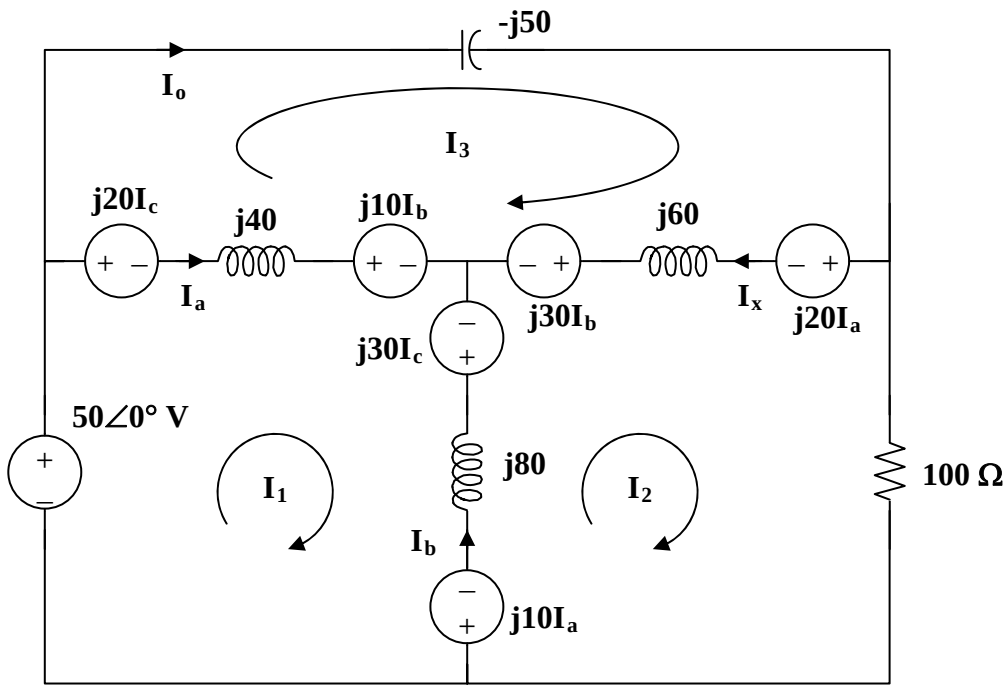

Note the following,

$$I_a = I_1 - I_3$$
$$I_b = I_2 - I_1$$
$$I_c = I_3 - I_2$$

and $I_o = I_3$

Now all we need to do is to write the mesh equations and to solve for I_o.

Loop # 1,

$$-50 + j20(I_3 - I_2)\ j\,40(I_1 - I_3) + j10(I_2 - I_1) - j30(I_3 - I_2) + j80(I_1 - I_2) - j10(I_1 - I_3) = 0$$

$$j100I_1 - j60I_2 - j40I_3 = 50$$

Multiplying everything by (1/j10) yields $10I_1 - 6I_2 - 4I_3 = -j5$ (1)

www.konkur.in

Loop # 2,

$$j10(I_1 - I_3) + j80(I_2 - I_1) + j30(I_3 - I_2) - j30(I_2 - I_1) + j60(I_2 - I_3) - j20(I_1 - I_3) + 100I_2 = 0$$

$$-j60I_1 + (100 + j80)I_2 - j20I_3 = 0 \qquad (2)$$

Loop # 3,

$$-j50I_3 + j20(I_1 - I_3) + j60(I_3 - I_2) + j30(I_2 - I_1) - j10(I_2 - I_1) + j40(I_3 - I_1) - j20(I_3 - I_2) = 0$$

$$-j40I_1 - j20I_2 + j10I_3 = 0$$

Multiplying by (1/j10) yields, $-4I_1 - 2I_2 + I_3 = 0$ (3)

Multiplying (2) by (1/j20) yields $-3I_1 + (4 - j5)I_2 - I_3 = 0$ (4)

Multiplying (3) by (1/4) yields $-I_1 - 0.5I_2 - 0.25I_3 = 0$ (5)

Multiplying (4) by (-1/3) yields $I_1 - ((4/3) - j(5/3))I_2 + (1/3)I_3 = -j0.5$ (7)

Multiplying [(6)+(5)] by 12 yields $(-22 + j20)I_2 + 7I_3 = 0$ (8)

Multiplying [(5)+(7)] by 20 yields $-22I_2 - 3I_3 = -j10$ (9)

(8) leads to $I_2 = -7I_3/(-22 + j20) = 0.2355\angle 42.3^o = (0.17418 + j0.15849)I_3$ (10)

(9) leads to $I_3 = (j10 - 22I_2)/3$, substituting (1) into this equation produces,

$$I_3 = j3.333 + (-1.2273 - j1.1623)I_3$$

or $I_3 = I_o =$ **$1.3040\angle 63^o$ amp.**

Chapter 13, Solution 23.

$\omega = 10$

0.5 H converts to $j\omega L_1 = j5$ ohms
1 H converts to $j\omega L_2 = j10$ ohms
0.2 H converts to $j\omega M = j2$ ohms
25 mF converts to $1/(j\omega C) = 1/(10 \times 25 \times 10^{-3}) = -j4$ ohms

The frequency-domain equivalent circuit is shown below.

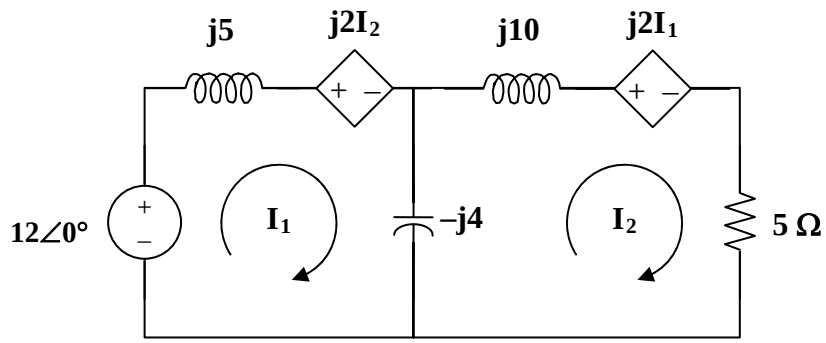

For mesh 1, $-12 + j5I_1 + j2I_2 + (-j4)(I_1 - I_2) = 0$ or $jI_1 + j6I_2 = 12$ or
$I_1 + 6I_2 = -j12$ (1)

For mesh 2, $(-j4)(I_2 - I_1) + j10I_2 + j2I_1 + 5I_2 = 0$ or
$j6I_1 + (5+j6)I_2 = 0$ (2)

From (1), $I_1 = -j12 - 6I_2$

Substituting this into (2) produces,

$$j6(-j12 - 6I_2) + (5+j6)I_2 = 0 = 72 + (5+j6-j36)I_2 \text{ or}$$

$$(5-j30)I_2 = (30.414\angle -80.54°)I_2 = -72 \text{ or } I_2 = 2.367\angle -99.46° \text{ A}$$

$$I_1 = -j12 - 6(-0.38909 - j2.3351) = 2.33454 + j(-12+14.0106)$$

$$= 2.33454 + j2.0106) = 3.081\angle 40.74° \text{ A}$$

Checking using matrices,

$$\begin{bmatrix} 1 & 6 \\ j6 & (5+j6) \end{bmatrix}\begin{bmatrix} I_1 \\ I_2 \end{bmatrix} = \begin{bmatrix} -j12 \\ 0 \end{bmatrix} \text{ which leads to } \begin{bmatrix} I_1 \\ I_2 \end{bmatrix} = \frac{\begin{bmatrix} (5+j6) & -6 \\ -j6 & 1 \end{bmatrix}}{5+j6-j36}\begin{bmatrix} -j12 \\ 0 \end{bmatrix}$$

www.konkur.in

$I_1 = [(72–j60)/(5–j30)] = (93.723\angle–39.806°)/(30.414\angle–80.538°) = 3.082\angle40.73°$ A and

$I_2 = [–72/(30.414\angle–80.54)] = 2.367\angle–99.46°$ A

Thus,

$$i_1(t) = \mathbf{3.081\cos(10t + 40.74°)\ A}, \quad i_2(t) = \mathbf{2.367\cos(10t – 99.46°)\ A}.$$

At $t = 15$ ms, $10t = 10\text{x}15\text{x}10^{-3} = 0.15$ rad $= 8.59°$

$$i_1 = 3.081\cos(49.33°) = \mathbf{2.00789\ A}$$

$$i_2 = 2.367\cos(–90.87°) = \mathbf{–0.03594\ A}$$

$$w = 0.5(5)(2.00789)^2 + 0.5(1)(–0.03594)^2 – (0.2)(2.00789)(–0.03594)$$
$$= 10.079056 + 0.0006458 + 0.0144327 = \mathbf{10.094\ J}.$$

3.081cos(10t + 40.74°) A, 2.367cos(10t – 99.46°) A, 10.094 J.

www.konkur.in

Chapter 13, Solution 24.

(a) $k = M/\sqrt{L_1L_2} = 1/\sqrt{4x2} = \mathbf{0.3535}$

(b) $\omega = 4$

1/4 F leads to $1/(j\omega C) = -j/(4x0.25) = -j$

$1||(-j) = -j/(1-j) = 0.5(1-j)$

1 H produces $j\omega M = j4$

4 H produces j16

2 H becomes j8

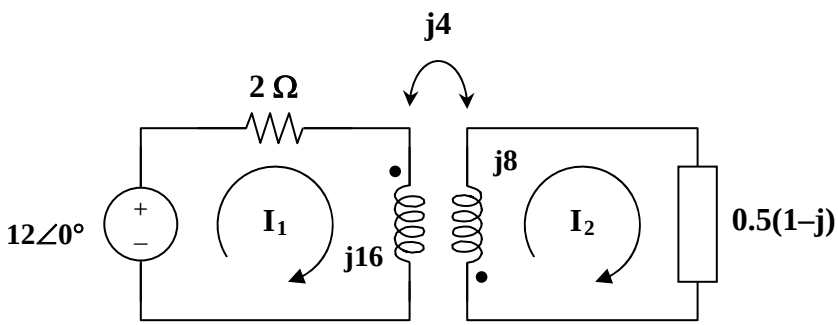

$$12 = (2 + j16)I_1 + j4I_2$$

or $$6 = (1 + j8)I_1 + j2I_2 \qquad (1)$$

$$0 = (j8 + 0.5 - j0.5)I_2 + j4I_1 \text{ or } I_1 = (0.5 + j7.5)I_2/(-j4) \qquad (2)$$

Substituting (2) into (1),

$$24 = (-11.5 - j51.5)I_2 \text{ or } I_2 = -24/(11.5 + j51.5) = -0.455\angle -77.41°$$

$$V_o = I_2(0.5)(1-j) = 0.3217\angle 57.59°$$

$$v_o = \mathbf{321.7cos(4t + 57.6°)\ mV}$$

(c) From (2), $I_1 = (0.5 + j7.5)I_2/(-j4) = 0.855\angle -81.21°$

$$i_1 = 0.885\cos(4t - 81.21°)\text{ A},\ i_2 = -0.455\cos(4t - 77.41°)\text{ A}$$

At t = 2s,

$$4t = 8\text{ rad} = 98.37°$$

www.konkur.in

$$i_1 = 0.885\cos(98.37° - 81.21°) = 0.8169$$

$$i_2 = -0.455\cos(98.37° - 77.41°) = -0.4249$$

$$w = 0.5L_1 i_1^2 + 0.5L_2 i_2^2 + Mi_1 i_2$$

$$= 0.5(4)(0.8169)^2 + 0.5(2)(-.4249)^2 + (1)(0.1869)(-0.4249) = \mathbf{1.168\ J}$$

www.konkur.in

Chapter 13, Solution 25.

$$m = k\sqrt{L_1L_2} = 0.5 \text{ H}$$

We transform the circuit to frequency domain as shown below.

$$12\sin 2t \text{ converts to } 12\angle 0°, \ \omega = 2$$

$$0.5 \text{ F converts to } 1/(j\omega C) = -j$$

$$2 \text{ H becomes } j\omega L = j4$$

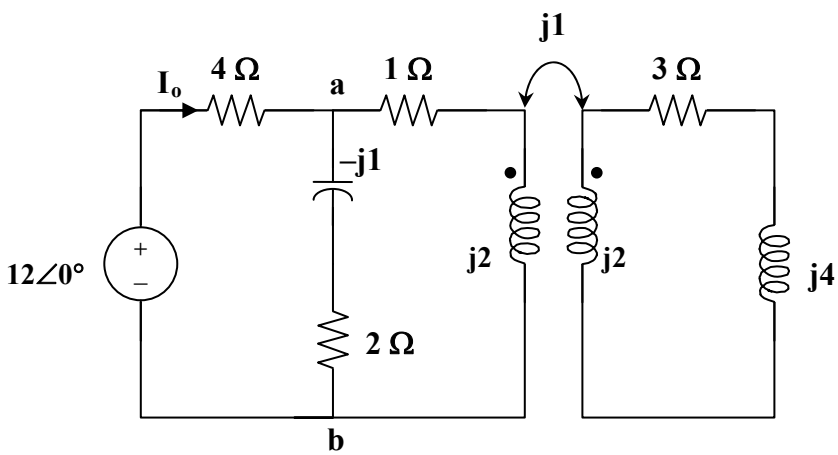

Applying the concept of reflected impedance,

$$Z_{ab} = (2 - j)||(1 + j2 + (1)^2/(j2 + 3 + j4))$$

$$= (2 - j)||(1 + j2 + (3/45) - j6/45)$$

$$= (2 - j)||(1 + j2 + (3/45) - j6/45)$$

$$= (2 - j)||(1.0667 + j1.8667)$$

$$=(2 - j)(1.0667 + j1.8667)/(3.0667 + j0.8667) = \mathbf{1.5085\angle 17.9° \ \Omega}$$

$$I_o = 12\angle 0°/(Z_{ab} + 4) = 12/(5.4355 + j0.4636) = 2.2\angle -4.88°$$

$$i_o = \mathbf{2.2\sin(2t - 4.88°) \ A}$$

www.konkur.in

Chapter 13, Solution 26.

$$M = k\sqrt{L_1L_2}$$

$$\omega M = k\sqrt{\omega L_1 \omega L_2} = 0.601\sqrt{20x40} = 17$$

The frequency-domain equivalent circuit is shown below.

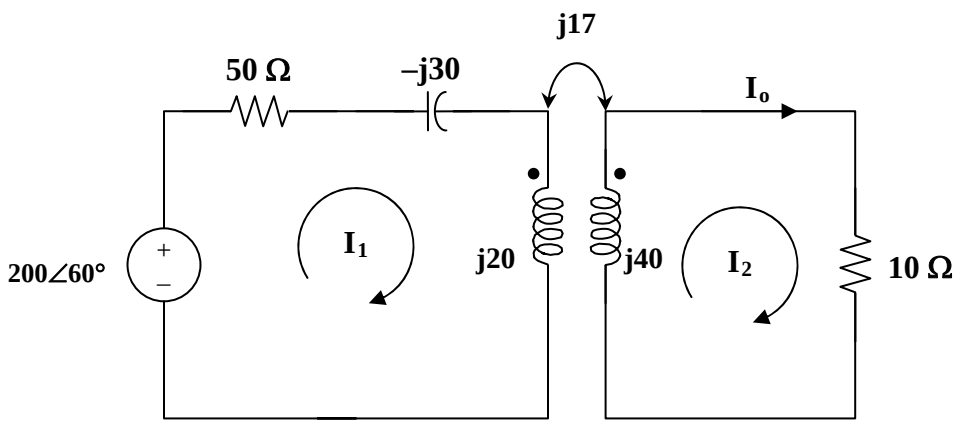

For mesh 1, $-200\angle 60° + (50-j30+j20)I_1 - j17I_2 = 0$ or

$$(50-j10)I_1 - j17I_2 = 200\angle 60° \qquad (1)$$

For mesh 2, $(10 + j40)I_2 - j17I_1 = 0$ or $-j17I_1 + (10+j40)I_2 = 0$ (2)

In matrix form,

$$\begin{bmatrix} 200\angle 60° \\ 0 \end{bmatrix} = \begin{bmatrix} 50-j10 & -j17 \\ -j17 & 10+j40 \end{bmatrix} \begin{bmatrix} I_1 \\ I_2 \end{bmatrix} \text{or}$$

$$\begin{bmatrix} I_1 \\ I_2 \end{bmatrix} = \frac{\begin{bmatrix} 10+j40 & j17 \\ j17 & 50-j10 \end{bmatrix}}{500+400+289-j100+j2{,}000} \begin{bmatrix} 200\angle 60° \\ 0 \end{bmatrix}$$

www.konkur.in

$I_1 = (10+j40)(200\angle 60°)/(1{,}189+j1{,}900)$

$= (41.231\angle 75.964°)(200\angle 60°)/(2{,}241.4\angle 57.962°) = 3.679\angle 78°$ A and

$I_2 = j17(200\angle 60°)/(2{,}241.4\angle 57.962°) = 1.5169\angle 92.04°$ A

$$\mathbf{I_o = I_2 = 1.5169\angle 92.04° \ A}$$

It should be noted that switching the dot on the winding on the right only reverses the direction of $\mathbf{I_o}$.

Chapter 13, Solution 27.

$$1H \longrightarrow j\omega L = j20$$
$$2H \longrightarrow j\omega L = j40$$
$$0.5H \longrightarrow j\omega L = j10$$

We apply mesh analysis to the circuit as shown below.

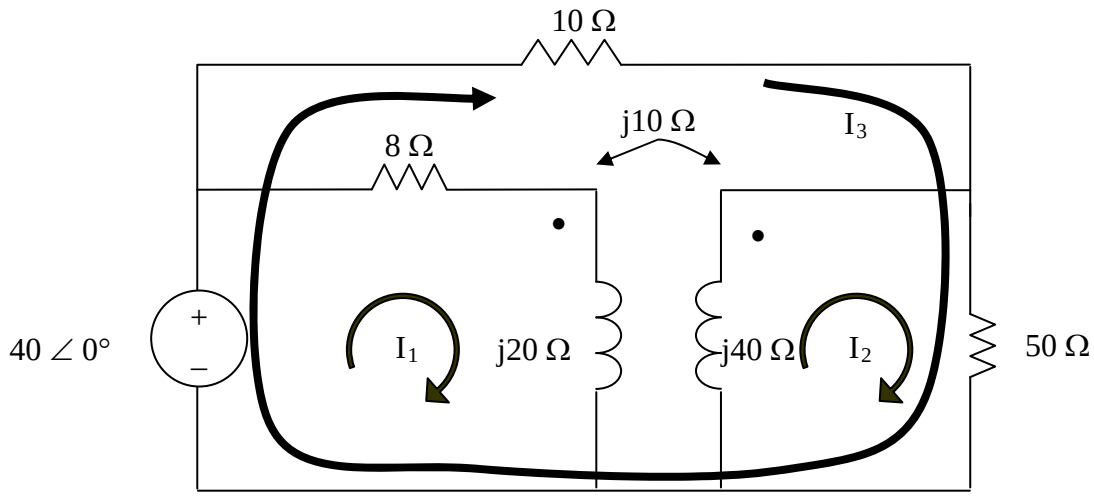

To make the problem easier to solve, let us have I_3 flow around the outside loop as shown.

For mesh 1,

$$-40 + 8I_1 + j20I_1 - j10I_2 = 0 \text{ or } (8+j20)I_1 - j10I_2 = 40 \qquad (1)$$

For mesh 2,

$$j40I_2 - j10I_1 + 50(I_2 + I_3) = 0 \text{ or } -j10I_1 + (50+j40)I_2 + 50I_3 = 0 \qquad (2)$$

For mesh 3,

$$-40 + 10I_3 + 50(I_3 + I_2) = 0 \text{ or } 50I_2 + 60I_3 = 40 \qquad (3)$$

In matrix form, (1) to (3) become

$$\begin{bmatrix} 8+j20 & -j10 & 0 \\ -j10 & 50+j40 & 50 \\ 0 & 50 & 60 \end{bmatrix} I = \begin{bmatrix} 40 \\ 0 \\ 40 \end{bmatrix}$$

```
>> Z=[(8+20i),-10i,0;-10i,(50+40i),50;0,50,60]
Z =
  8.0000 +20.0000i        0 -10.0000i        0
```

www.konkur.in

```
   0 -10.0000i  50.0000 +40.0000i  50.0000
   0            50.0000            60.0000

>> V=[40;0;40]
V =
   40
    0
   40

>> I=inv(Z)*V
I =
  0.6354 - 1.5118i
  0.0613 + 0.4682i
  0.6156 - 0.3901i
```

Solving this leads to $\mathbf{I_{50}} = \mathbf{I_2} + \mathbf{I_3} = 0.0613+0.6156 + j(0.4682–0.3901) =$

$0.6769+j0.0781 = 0.6814\angle 6.58°$ A or I_{50rms} $|\mathbf{I_{50rms}}| = 0.6814/1.4142 = 481.8$ mA.

The power delivered to the 50-Ω resistor is

$$P = (I_{50rms})^2R = (0.4818)^2 50 = \mathbf{11.608\ W}.$$

www.konkur.in

Chapter 13, Solution 28.

We find Z_{Th} by replacing the 20-ohm load with a unit source as shown below.

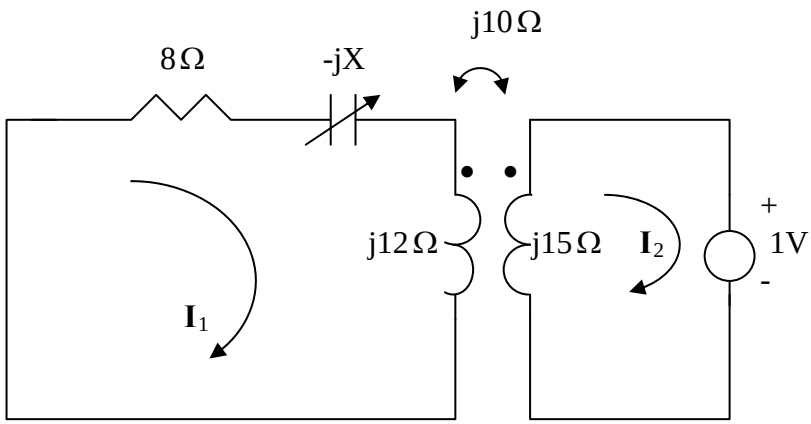

For mesh 1, $$0 = (8 - jX + j12)I_1 - j10I_2 \qquad (1)$$

For mesh 2,

$$1 + j15I_2 - j10I_1 = 0 \quad \longrightarrow \quad I_1 = 1.5I_2 - 0.1j \qquad (2)$$

Substituting (2) into (1) leads to

$$I_2 = \frac{-1.2 + j0.8 + 0.1X}{12 + j8 - j1.5X}$$

$$Z_{Th} = \frac{1}{-I_2} = \frac{12 + j8 - j1.5X}{1.2 - j0.8 - 0.1X}$$

$$|Z_{Th}| = 20 = \frac{\sqrt{12^2 + (8 - 1.5X)^2}}{\sqrt{(1.2 - 0.1X)^2 + 0.8^2}} \quad \longrightarrow \quad 0 = 1.75X^2 + 72X - 624$$

Solving the quadratic equation yields X = **6.425 Ω**

www.konkur.in

Chapter 13, Solution 29.

$$30 \text{ mH becomes } j\omega L = j30x10^{-3}x10^{3} = j30$$

$$50 \text{ mH becomes } j50$$

$$\text{Let } X = \omega M$$

Using the concept of reflected impedance,

$$Z_{in} = 10 + j30 + X^2/(20 + j50)$$

$$I_1 = V/Z_{in} = 165/(10 + j30 + X^2/(20 + j50))$$

$$p = 0.5|I_1|^2(10) = 320 \text{ leads to } |I_1|^2 = 64 \text{ or } |I_1| = 8$$

$$8 = |165(20 + j50)/(X^2 + (10 + j30)(20 + j50))|$$

$$= |165(20 + j50)/(X^2 - 1300 + j1100)|$$

$$\text{or} \quad 64 = 27225(400 + 2500)/((X^2 - 1300)^2 + 1{,}210{,}000)$$

$$(X^2 - 1300)^2 + 1{,}210{,}000 = 1{,}233{,}633$$

$$X = 33.86 \text{ or } 38.13$$

$$\text{If } X = 38.127 = \omega M$$

$$M = 38.127 \text{ mH}$$

$$k = M/\sqrt{L_1L_2} = 38.127/\sqrt{30x50} = \mathbf{0.984}$$

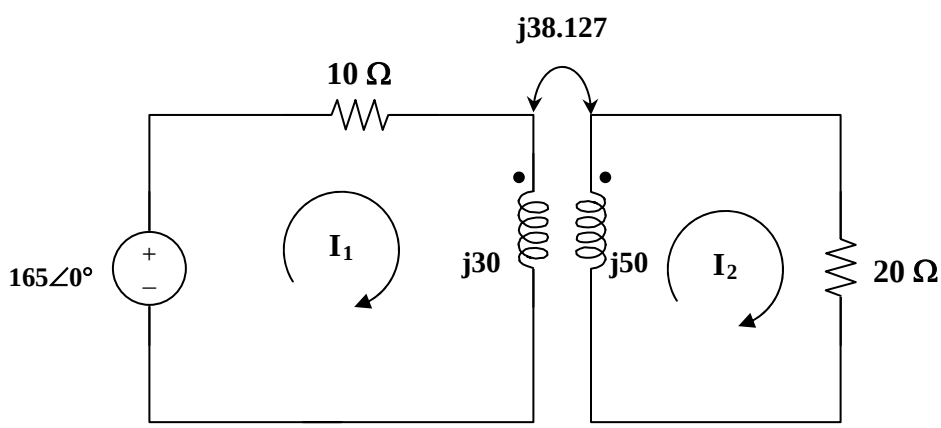

www.konkur.in

$$165 = (10 + j30)I_1 - j38.127I_2 \qquad (1)$$

$$0 = (20 + j50)I_2 - j38.127I_1 \qquad (2)$$

In matrix form,
$$\begin{bmatrix} 165 \\ 0 \end{bmatrix} = \begin{bmatrix} 10 + j30 & -j38.127 \\ -j38.127 & 20 + j50 \end{bmatrix} \begin{bmatrix} I_1 \\ I_2 \end{bmatrix}$$

$$\Delta = 154 + j1100 = 1110.73\angle 82.03°, \ \Delta_1 = 888.5\angle 68.2°, \ \Delta_2 = j6291$$

$$I_1 = \Delta_1/\Delta = 8\angle -13.81°, \ I_2 = \Delta_2/\Delta = 5.664\angle 7.97°$$

$$i_1 = 8\cos(1000t - 13.83°), \ i_2 = 5.664\cos(1000t + 7.97°)$$

$$\text{At } t = 1.5 \text{ ms}, \ 1000t = 1.5 \text{ rad} = 85.94°$$

$$i_1 = 8\cos(85.94° - 13.83°) = 2.457$$

$$i_2 = 5.664\cos(85.94° + 7.97°) = -0.3862$$

$$w = 0.5L_1 i_1^2 + 0.5L_2 i_2^2 + Mi_1 i_2$$

$$= 0.5(30)(2.547)^2 + 0.5(50)(-0.3862)^2 - 38.127(2.547)(-0.3862)$$

$$= \mathbf{130.51\ mJ}$$

www.konkur.in

Chapter 13, Solution 30.

(a) $Z_{in} = j40 + 25 + j30 + (10)^2/(8 + j20 - j6)$

$= 25 + j70 + 100/(8 + j14) =$ **(28.08 + j64.62) ohms**

(b) $j\omega L_a = j30 - j10 = j20,\ j\omega L_b = j20 - j10 = j10,\ j\omega L_c = j10$

Thus the Thevenin Equivalent of the linear transformer is shown below.

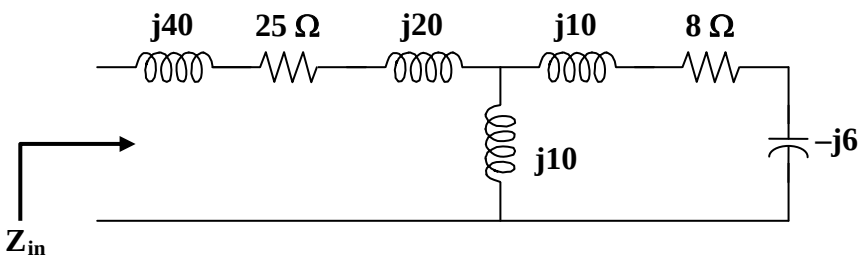

$Z_{in} = j40 + 25 + j20 + j10||(8 + j4) = 25 + j60 + j10(8 + j4)/(8 + j14)$

$=$ **(28.08 + j64.62) ohms**

www.konkur.in

Chapter 13, Solution 31.

Using Fig. 13.100, design a problem to help other students to better understand linear transformers and how to find T-equivalent and Π–equivalent circuits.

Although there are many ways to solve this problem, this is an example based on the same kind of problem asked in the third edition.

Problem

For the circuit in Fig. 13.99, find:

(a) the *T*-equivalent circuit,

(b) the Π-equivalent circuit.

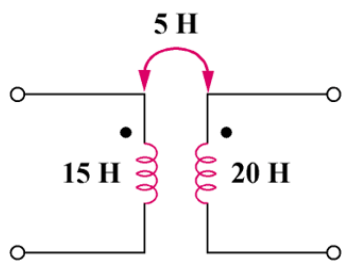

Figure 13.99

Solution

(a) $L_a = L_1 - M = \mathbf{10\ H}$

$L_b = L_2 - M = \mathbf{15\ H}$

$L_c = M = \mathbf{5\ H}$

(b) $L_1L_2 - M^2 = 300 - 25 = 275$

$L_A = (L_1L_2 - M^2)/(L_1 - M) = 275/15 = \mathbf{18.33\ H}$

$L_B = (L_1L_2 - M^2)/(L_1 - M) = 275/10 = \mathbf{27.5\ H}$

$L_C = (L_1L_2 - M^2)/M = 275/5 = \mathbf{55\ H}$

www.konkur.in

Chapter 13, Solution 32.

We first find Z_{in} for the second stage using the concept of reflected impedance.

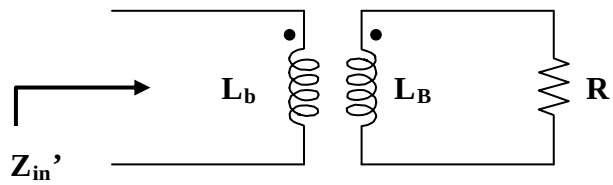

$$Z_{in}' = j\omega L_b + \omega^2 M_b^2/(R + j\omega L_b) = (j\omega L_b R - \omega^2 L_b^2 + \omega^2 M_b^2)/(R + j\omega L_b) \quad (1)$$

For the first stage, we have the circuit below.

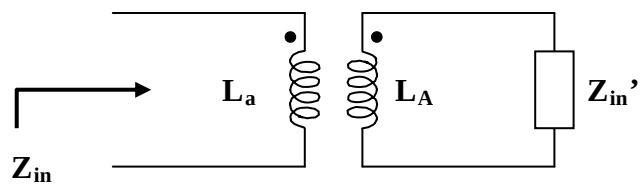

$$Z_{in} = j\omega L_a + \omega^2 M_a^2/(j\omega L_a + Z_{in})$$

$$= (-\omega^2 L_a^2 + \omega^2 M_a^2 + j\omega L_a Z_{in})/(j\omega L_a + Z_{in}) \qquad (2)$$

Substituting (1) into (2) gives,

$$= \frac{-\omega^2 L_a^2 + \omega^2 M_a^2 + j\omega L_a \dfrac{(j\omega L_b R - \omega^2 L_b^2 + \omega^2 M_b^2)}{R + j\omega L_b}}{j\omega L_a + \dfrac{j\omega L_b R - \omega^2 L_b^2 + \omega^2 M_b^2}{R + j\omega L_b}}$$

$$= \frac{-R\omega^2 L_a^2 + \omega^2 M_a^2 R - j\omega^3 L_b L_a + j\omega^3 L_b M_a^2 + j\omega L_a(j\omega L_b R - \omega^2 L_b^2 + \omega^2 M_b^2)}{j\omega RLa - \omega^2 L_a L_b + j\omega L_b R - \omega^2 L_a^2 + \omega^2 M_b^2}$$

$$Z_{in} = \frac{\boldsymbol{\omega^2 R(L_a^2 + L_a L_b - M_a^2) + j\omega^3(L_a^2 L_b + L_a L_b^2 - L_a M_b^2 - L_b M_a^2)}}{\boldsymbol{\omega^2(L_a L_b + L_b^2 - M_b^2) - j\omega R(L_a + L_b)}}$$

www.konkur.in

www.konkur.in

Chapter 13, Solution 33.

$$Z_{in} = 10 + j12 + (15)^2/(20 + j\,40 - j5) = 10 + j12 + 225/(20 + j35)$$

$$= 10 + j12 + 225(20 - j35)/(400 + 1225)$$

$$= \mathbf{(12.769 + j7.154)\ \Omega}$$

www.konkur.in

Chapter 13, Solution 34.

Using Fig. 13.103, design a problem to help other students to better understand how to find the input impedance of circuits with transformers.

Although there are many ways to solve this problem, this is an example based on the same kind of problem asked in the third edition.

Problem

Find the input impedance of the circuit in Fig. 13.102.

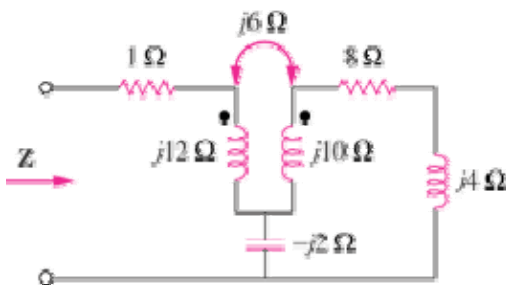

Figure 13.102

Solution

Insert a 1-V voltage source at the input as shown below.

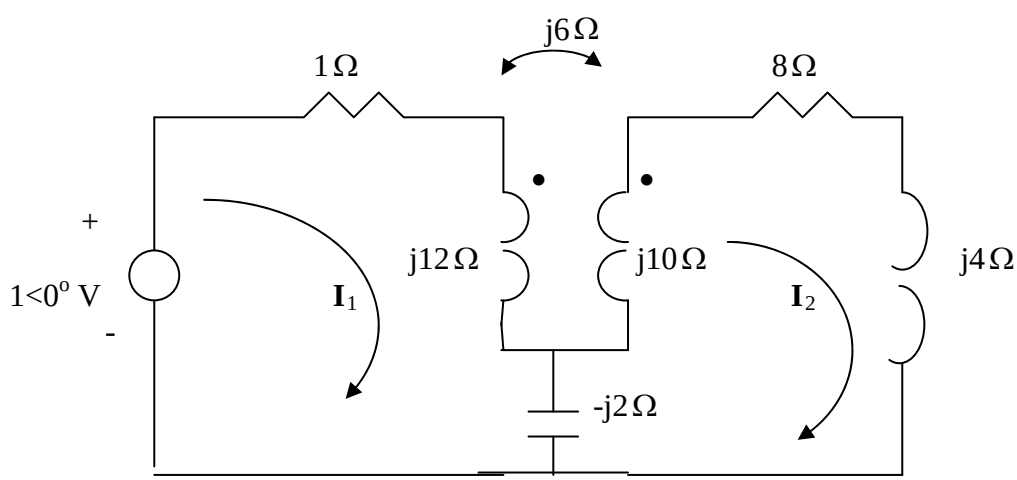

For loop 1,

$$1 = (1 + j10)I_1 - j4I_2 \qquad (1)$$

www.konkur.in

For loop 2,

$$0 = (8 + j4 + j10 - j2)I_2 + j2I_1 - j6I_1 \quad \longrightarrow \quad 0 = -jI_1 + (2 + j3)I_2 \qquad (2)$$

Solving (1) and (2) leads to $\mathbf{I}_1$=0.019 –j0.1068

$$\boldsymbol{Z} = \frac{\mathbf{1}}{\boldsymbol{I_1}} = \mathbf{1.6154} + \boldsymbol{j}\mathbf{9.077} = \underline{\mathbf{9.219\angle 79.91^o\,\Omega}}$$

Alternatively, an easier way to obtain **Z** is to replace the transformer with its equivalent T circuit and use series/parallel impedance combinations. This leads to exactly the same result.

www.konkur.in

Chapter 13, Solution 35.

For mesh 1,

$$16 = (10 + j4)I_1 + j2I_2 \qquad (1)$$

For mesh 2, $$0 = j2I_1 + (30 + j26)I_2 - j12I_3 \qquad (2)$$

For mesh 3, $$0 = -j12I_2 + (5 + j11)I_3 \qquad (3)$$

We may use MATLAB to solve (1) to (3) and obtain

$$\mathbf{I_1} = 1.3736 - \text{j}0.5385 = \mathbf{1.4754\angle{-21.41}°\ A}$$
$$\mathbf{I_2} = -0.0547 - \text{j}0.0549 = \mathbf{77.5\angle{-134.85}°\ mA}$$
$$\mathbf{I_3} = -0.0268 - \text{j}0.0721 = \mathbf{77\angle{-110.41}°\ mA}$$

1.4754∠–21.41° A, 77.5∠–134.85° mA, 77∠–110.41° mA

www.konkur.in

Chapter 13, Solution 36.

Following the two rules in section 13.5, we obtain the following:

(a) $V_2/V_1 = \mathbf{-n}$, $I_2/I_1 = \mathbf{-1/n}$ $(n = V_2/V_1)$

(b) $V_2/V_1 = \mathbf{-n}$, $I_2/I_1 = \mathbf{-1/n}$

(c) $V_2/V_1 = \mathbf{n}$, $I_2/I_1 = \mathbf{1/n}$

(d) $V_2/V_1 = \mathbf{n}$, $I_2/I_1 = \mathbf{-1/n}$

www.konkur.in

Chapter 13, Solution 37.

(a) $n = \dfrac{V_2}{V_1} = \dfrac{2400}{480} = \underline{5}$

(b) $S_1 = I_1 V_1 = S_2 = I_2 V_2 = 50{,}000 \longrightarrow I_1 = \dfrac{50{,}000}{480} = \underline{104.17\ \text{A}}$

(c) $I_2 = \dfrac{50{,}000}{2400} = \underline{20.83\ \text{A}}$

www.konkur.in

Chapter 13, Solution 38.

Design a problem to help other students to better understand ideal transformers.

Although there are many ways to solve this problem, this is an example based on the same kind of problem asked in the third edition.

Problem

A 4-kVA, 2300/230-V rms transformer has an equivalent impedance of $2\angle 10°\Omega$ on the primary side. If the transformer is connected to a load with 0.6 power factor leading, calculate the input impedance.

Solution

$Z_{in} = Z_p + Z_L/n^2, \quad n = v_2/v_1 = 230/2300 = 0.1$

$v_2 = 230 \text{ V}, \quad s_2 = v_2 I_2^*$

$I_2^* = s_2/v_2 = 17.391\angle -53.13° \text{ or } I_2 = 17.391\angle 53.13° \text{ A}$

$Z_L = v_2/I_2 = 230\angle 0°/17.391\angle 53.13° = 13.235\angle -53.13°$

$Z_{in} = 2\angle 10° + 1323.5\angle -53.13°$

$= 1.97 + j0.3473 + 794.1 - j1058.8$

$Z_{in} = \mathbf{1.324\angle -53.05° \text{ k}\Omega}$

www.konkur.in

Chapter 13, Solution 39.

Referred to the high-voltage side,

$$Z_L = (1200/240)^2(0.8\angle 10°) = 20\angle 10°$$

$$Z_{in} = 60\angle -30° + 20\angle 10° = 76.4122\angle -20.31°$$

$$I_1 = 1200/Z_{in} = 1200/76.4122\angle -20.31° = \mathbf{15.7\angle 20.31°\ A}$$

Since $S = I_1v_1 = I_2v_2$, $I_2 = I_1v_1/v_2$

$$= (1200/240)(15.7\angle 20.31°) = \mathbf{78.5\angle 20.31°\ A}$$

www.konkur.in

Chapter 13, Solution 40.

Consider the circuit as shown below.

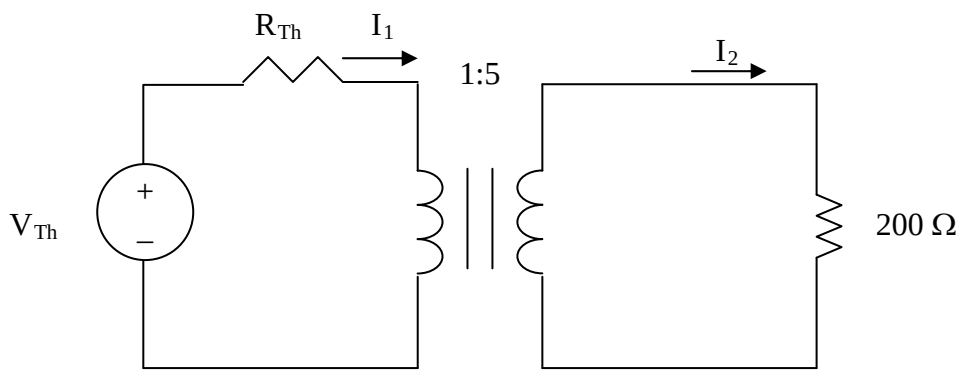

We reflect the 200-Ω load to the primary side.

$$Z_p = 100 + \frac{200}{5^2} = 108$$

$$I_1 = \frac{10}{108}, \qquad I_2 = \frac{I_1}{n} = 2/108$$

$$P = \frac{1}{2}|I_2|^2 R_L = \frac{1}{2}\left(\frac{2}{108}\right)^2(200) = \underline{34.3 \text{ mW}}$$

www.konkur.in

Chapter 13, Solution 41.

We reflect the 2-ohm resistor to the primary side.

$$\mathbf{Z_{in}} = 10 + 2/n^2, \quad n = -1/3$$

Since both $\mathbf{I_1}$ and $\mathbf{I_2}$ enter the dotted terminals, $\mathbf{Z_{in}} = 10 + 18 = 28$ ohms

$$\mathbf{I_1} = 14\angle 0°/28 = \mathbf{500\ mA} \text{ and } \mathbf{I_2} = \mathbf{I_1}/n = 0.5/(-1/3) = \mathbf{-1.5\ A}$$

www.konkur.in

Chapter 13, Solution 42.

We apply mesh analysis to the circuit as shown below.

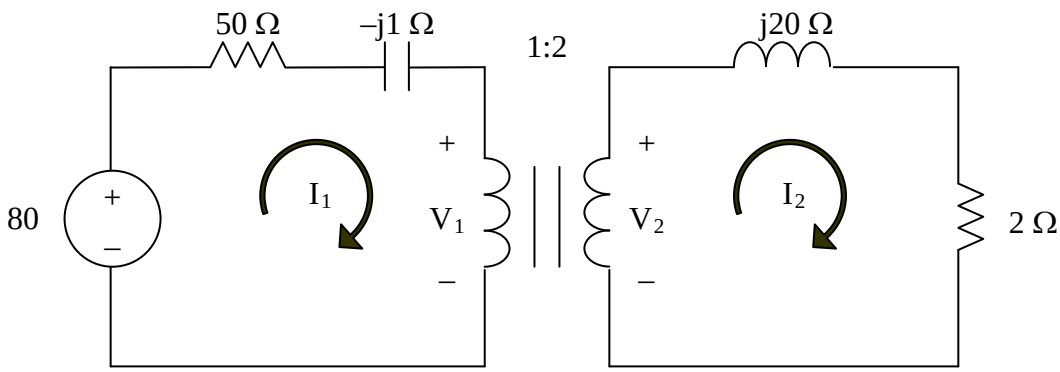

For mesh 1,

$$-80 + (50-j)I_1 + V_1 = 0 \qquad (1)$$

For mesh 2,

$$-V_2 + (2+j20)I_2 = 0 \qquad (2)$$

At the transformer terminals,

$$V_2 = 2V_1 \text{ or } 2V_1 - V_2 = 0 \qquad (3)$$

$$I_1 = 2I_2 \text{ or } I_1 - 2I_2 = 0 \qquad (4)$$

From (1) to (4),

$$\begin{bmatrix} 50-j & 0 & 1 & 0 \\ 0 & 2+j20 & 0 & -1 \\ 0 & 0 & 2 & -1 \\ 1 & -2 & 0 & 0 \end{bmatrix}\begin{bmatrix} I_1 \\ I_2 \\ V_1 \\ V_2 \end{bmatrix} = \begin{bmatrix} 80 \\ 0 \\ 0 \\ 0 \end{bmatrix}$$

Solving this with MATLAB,

```
>> A = [(50-j) 0 1 0;0 (2+20j) 0 -1;0 0 2 -1;1 -2 0 0]

A =

  Columns 1 through 3

  50.0000 - 1.0000i        0            1.0000
       0            2.0000 +20.0000i        0
       0                 0            2.0000
   1.0000           -2.0000                 0

  Column 4

       0
  -1.0000
  -1.0000
```

www.konkur.in

```
     0

>> B = [80;0;0;0]

B =

    80
     0
     0
     0

>> C = inv(A)*B

C =

   1.5743 - 0.1247i          (I1)
   0.7871 - 0.0623i          (I2)
   1.4106 + 7.8091i          (V1)
   2.8212 +15.6181i          (V2)
```

$$I_2 = (787.1 – j62.3) \text{ mA or } 789.6\angle –4.53° \text{ mA}$$

The power absorbed by the 2-Ω resistor is

$$P = |I_2|^2R = (0.7896)^2 2 = \mathbf{1.2469\ W}.$$

www.konkur.in

Chapter 13, Solution 43.

Transform the two current sources to voltage sources, as shown below.

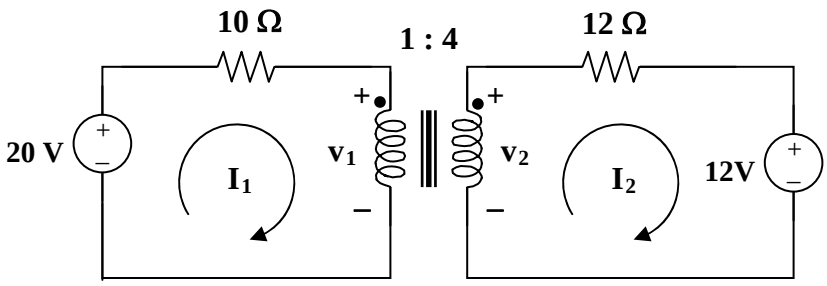

Using mesh analysis, $-20 + 10I_1 + v_1 = 0$

$$20 = v_1 + 10I_1 \qquad (1)$$

$$12 + 12I_2 - v_2 = 0 \text{ or } 12 = v_2 - 12I_2 \qquad (2)$$

At the transformer terminal, $v_2 = nv_1 = 4v_1$ (3)

$$I_1 = nI_2 = 4I_2 \qquad (4)$$

Substituting (3) and (4) into (1) and (2), we get,

$$20 = v_1 + 40I_2 \qquad (5)$$

$$12 = 4v_1 - 12I_2 \qquad (6)$$

Solving (5) and (6) gives $v_1 =$ **4.186 V** and $v_2 = 4v =$ **16.744 V**

www.konkur.in

Chapter 13, Solution 44.

We can apply the superposition theorem. Let $i_1 = i_1' + i_1''$ and $i_2 = i_2' + i_2''$ where the single prime is due to the DC source and the double prime is due to the AC source. Since we are looking for the steady-state values of i_1 and i_2,

$$i_1' = i_2' = 0.$$

For the AC source, consider the circuit below.

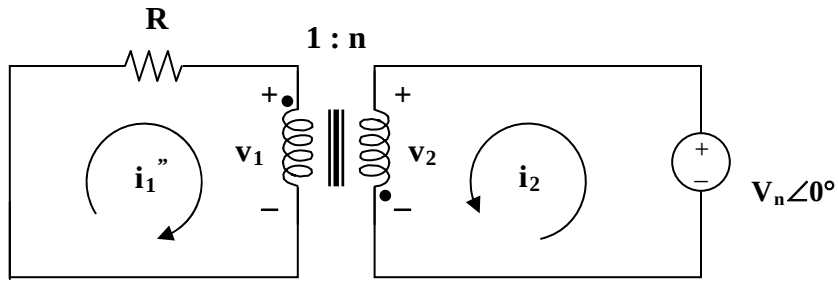

$$v_2/v_1 = -n, \quad I_2''/I_1'' = -1/n$$

But $v_2 = v_m$, $v_1 = -v_m/n$ or $I_1'' = v_m/(Rn)$

$$I_2'' = -I_1''/n = -v_m/(Rn^2)$$

Hence, $i_1(t) = \mathbf{(v_m/Rn)\cos\omega t\ A}$, and $i_2(t) = \mathbf{(-v_m/(n^2R))\cos\omega t\ A}$

www.konkur.in

Chapter 13, Solution 45.

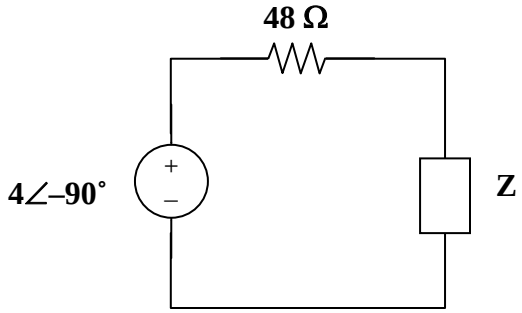

$$Z_L = 8 - \frac{j}{\omega C} = 8 - j4\,,\ \ n = 1/3$$

$$Z = \frac{Z_L}{n^2} = 9Z_L = 72 - j36$$

$$I = \frac{4\angle -90^\circ}{48 + 72 - j36} = \frac{4\angle -90^\circ}{125.28\angle -16.7^\circ} = 0.03193\angle -73.3^\circ$$

We now have some choices, we can go ahead and calculate the current in the second loop and calculate the power delivered to the 8-ohm resistor directly or we can merely say that the power delivered to the equivalent resistor in the primary side must be the same as the power delivered to the 8-ohm resistor. Therefore,

$$P_{8\Omega} = \left|\frac{I}{2}^2\right| 72 = 0.5098\text{x}10^{-3}72 = \mathbf{36.71\ mW}$$

The student is encouraged to calculate the current in the secondary and calculate the power delivered to the 8-ohm resistor to verify that the above is correct.

www.konkur.in

Chapter 13, Solution 46.

(a) Reflecting the secondary circuit to the primary, we have the circuit shown below.

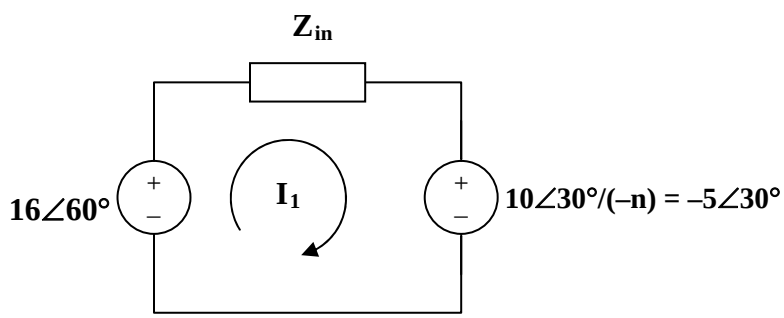

$\mathbf{Z_{in}} = 10 + j16 + (1/4)(12 - j8) = 13 + j14$

$-16\angle 60° + \mathbf{Z_{in}I_1} - 5\angle 30° = 0$ or $\mathbf{I_1} = (16\angle 60° + 5\angle 30°)/(13 + j14)$

Hence, $\mathbf{I_1} = \mathbf{1.072\angle 5.88°\ A}$, and $\mathbf{I_2} = -0.5\mathbf{I_1} = \mathbf{0.536\angle 185.88°\ A}$

(b) Switching a dot will not affect Z_{in} but will affect $\mathbf{I_1}$ and $\mathbf{I_2}$.

$\mathbf{I_1} = (16\angle 60° - 5\angle 30°)/(13 + j14) = \mathbf{0.625\ \angle 25\ A}$

and $\mathbf{I_2} = 0.5\mathbf{I_1} = \mathbf{0.3125\angle 25°\ A}$

Chapter 13, Solution 47.

$$(1/3)\text{ F } 1F \longrightarrow \frac{1}{j\omega C} = \frac{1}{j3x1/3} = -j1$$

Consider the circuit shown below.

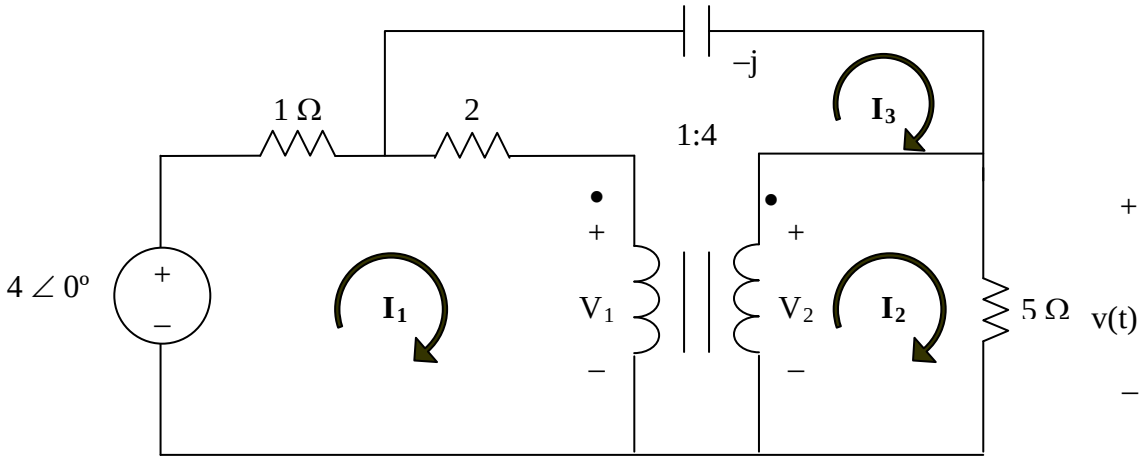

For mesh 1,

$$3I_1 - 2I_3 + V_1 = 4 \qquad (1)$$

For mesh 2,

$$5I_2 - V_2 = 0 \qquad (2)$$

For mesh 3,

$$-2I_1\ (2-j)I_3 - V_1 + V_2 = 0 \qquad (3)$$

At the terminals of the transformer,

$$V_2 = nV_1 = 4V_1 \qquad (4)$$

$$I_1 - I_3 = 4(I_2 - I_3) \qquad (5)$$

In matrix form,

$$\begin{bmatrix} 3 & 0 & -2 & 1 & 0 \\ 0 & 5 & 0 & 0 & -1 \\ -2 & 0 & 2-j & -1 & 1 \\ 0 & 0 & 0 & -4 & 1 \\ 1 & -4 & 3 & 0 & 0 \end{bmatrix} \begin{bmatrix} I_1 \\ I_2 \\ I_3 \\ V_1 \\ V_2 \end{bmatrix} = \begin{bmatrix} 4 \\ 0 \\ 0 \\ 0 \\ 0 \end{bmatrix}$$

Solving this using MATLAB yields

```
>>A = [3,0,-2,1,0; 0,5,0,0,-1; -2,0,(2-j),-1,1 ;0,0,0,-4,1; 1,-4,3,0,0]
```

www.konkur.in

```
A =

   3.0000         0   -2.0000    1.0000         0
        0    5.0000         0         0   -1.0000
  -2.0000         0    2.0000 - 1.0000i  -1.0000    1.0000
        0         0         0   -4.0000    1.0000
   1.0000   -4.0000    3.0000         0         0

>>U = [4;0;0;0;0]

>>X = inv(A)*U

X =

   1.2952 + 0.0196i
   0.5287 + 0.0507i
   0.2733 + 0.0611i
   0.6609 + 0.0634i
   2.6437 + 0.2537i
```

$\mathbf{V} = 5\mathbf{I_2} = V_2 = 2.6437+j0.2537 = 2.656\angle 5.48°$ V, therefore,

$$v(t) = \mathbf{2.656\cos(3t+5.48^{\circ})\ V}$$

www.konkur.in

Chapter 13, Solution 48.

Using Fig. 13.113, design a problem to help other students to better understand how ideal transformers work.

Although there are many ways to solve this problem, this is an example based on the same kind of problem asked in the third edition.

Problem

Find $\mathbf{I}_x$ in the ideal transformer circuit of Fig. 13.112.

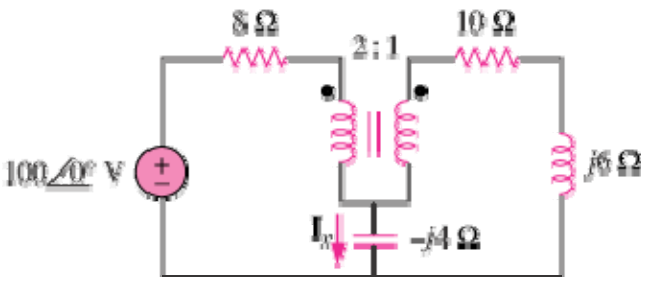

Figure 13.112

Solution

We apply mesh analysis.

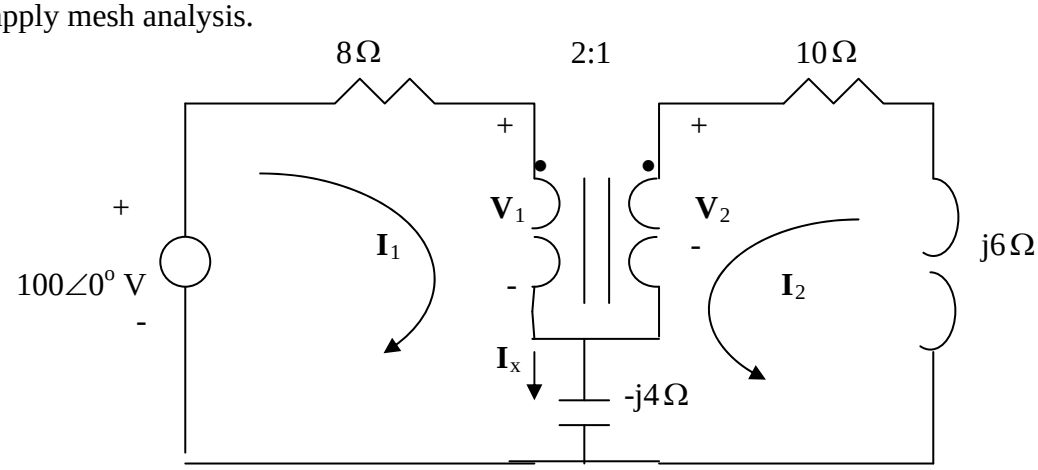

$$100 = (8 - j4)I_1 - j4I_2 + V_1 \qquad (1)$$

$$0 = (10 + j2)I_2 - j4I_1 + V_2 \qquad (2)$$

But

$$\frac{V_2}{V_1} = n = \frac{1}{2} \quad \longrightarrow \quad V_1 = 2V_2 \qquad (3)$$

www.konkur.in

$$\frac{I_2}{I_1} = -\frac{1}{n} = -2 \qquad \longrightarrow \qquad I_1 = -0.5I_2 \qquad (4)$$

Substituting (3) and (4) into (1) and (2), we obtain

$$100 = (-4 - j2)I_2 + 2V_2 \qquad (1)a$$
$$0 = (10 + j4)I_2 + V_2 \qquad (2)a$$

Solving (1)a and (2)a leads to $\mathbf{I}_2$ = -3.5503 +j1.4793

$$\boldsymbol{I_x = I_1 + I_2 = 0.5I_2 = \underline{1.923\angle 157.4^o \ \ A}}$$

www.konkur.in

Chapter 13, Solution 49.

$$\omega = 2, \quad \frac{1}{20}\text{F} \longrightarrow \frac{1}{j\omega C} = -j10$$

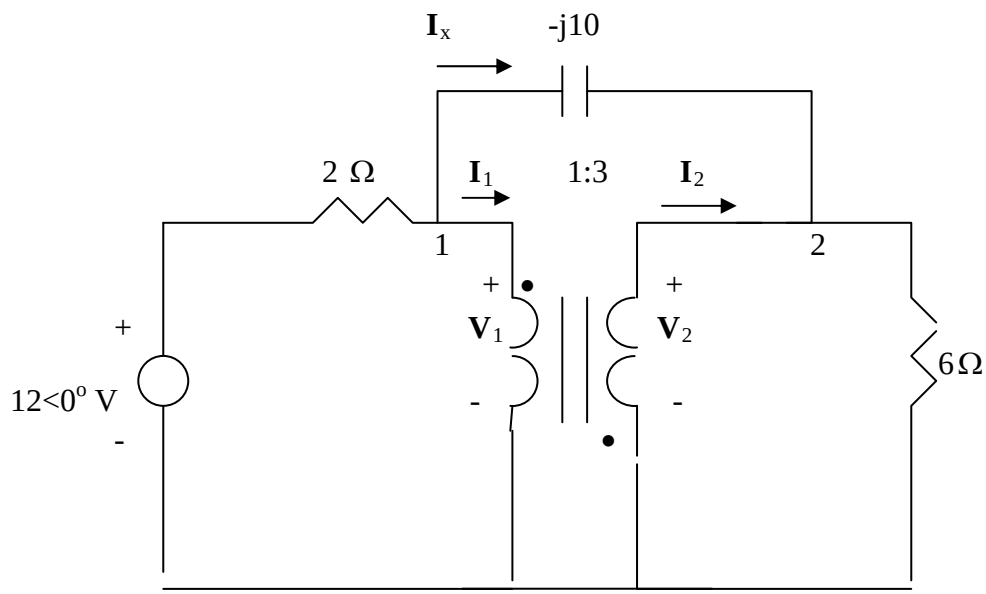

At node 1,

$$\frac{12 - V_1}{2} = \frac{V_1 - V_2}{-j10} + I_1 \longrightarrow 12 = 2I_1 + V_1(1 + j0.2) - j0.2V_2 \qquad (1)$$

At node 2,

$$I_2 + \frac{V_1 - V_2}{-j10} = \frac{V_2}{6} \longrightarrow 0 = 6I_2 + j0.6V_1 - (1 + j0.6)V_2 \qquad (2)$$

At the terminals of the transformer, $V_2 = -3V_1, \quad I_2 = -\frac{1}{3}I_1$

Substituting these in (1) and (2),

$$12 = -6I_2 + V_1(1 + j0.8), \qquad 0 = 6I_2 + V_1(3 + j2.4)$$

Adding these gives $\mathbf{V}_1$=1.829 –j1.463 and

$$I_x = \frac{V_1 - V_2}{-j10} = \frac{4V_1}{-j10} = 0.937\angle 51.34^o$$

$i_x(t)$ = **937cos(2t+51.34˚) mA**.

www.konkur.in

Chapter 13, Solution 50.

The value of Z_{in} is not effected by the location of the dots since n^2 is involved.

$Z_{in}' = (6 - j10)/(n')^2, \; n' = 1/4$

$Z_{in}' = 16(6 - j10) = 96 - j160$

$Z_{in} = 8 + j12 + (Z_{in}' + 24)/n^2, \quad n = 5$

$Z_{in} = 8 + j12 + (120 - j160)/25 = 8 + j12 + 4.8 - j6.4$

$$Z_{in} = \mathbf{(12.8 + j5.6)\ \Omega}$$

www.konkur.in

Chapter 13, Solution 51.

Let $\mathbf{Z_3}$ = 36 +j18, where $\mathbf{Z_3}$ is reflected to the middle circuit.

$\mathbf{Z_R'} = \mathbf{Z_L}/n^2 = (12 + j2)/4 = 3 + j0.5$

$$\mathbf{Z_{in}} = 5 - j2 + \mathbf{Z_R'} = \mathbf{[8 - j1.5]\ \Omega}$$

$$\mathbf{I_1} = 24\angle 0°/\mathbf{Z_{eq}} = 24\angle 0°/(8 - j1.5) = 24\angle 0°/8.14\angle -10.62° = \mathbf{8.95\angle 10.62°\ A}$$

[8 – j1.5] Ω, 8.95∠10.62° A

www.konkur.in

Chapter 13, Solution 52.

For maximum power transfer,

$40 = Z_L/n^2 = 10/n^2$ or $n^2 = 10/40$ which yields $n = 1/2 = 0.5$

$I = 120/(40 + 40) = 3/2$

$p = I^2R = (9/4)x40 =$ **90 watts**.

www.konkur.in

Chapter 13, Solution 53.

(a) The Thevenin equivalent to the left of the transformer is shown below.

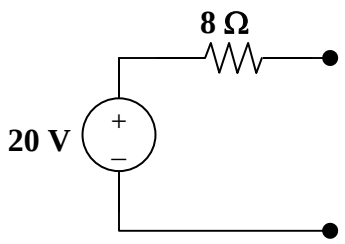

The reflected load impedance is $Z_L' = Z_L/n^2 = 200/n^2$.

For maximum power transfer, $8 = 200/n^2$ produces $n =$ **5**.

(b) If $n = 10$, $Z_L' = 200/10 = 2$ and $I = 20/(8 + 2) = 2$

$p = I^2 Z_L' = (2)^2(2) =$ **8 watts**.

www.konkur.in

Chapter 13, Solution 54.

(a)

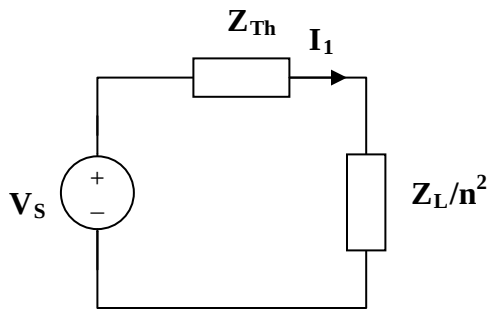

For maximum power transfer,

$$Z_{Th} = Z_L/n^2, \text{ or } n^2 = Z_L/Z_{Th} = 8/128$$

$$n = \mathbf{0.25}$$

(b) $I_1 = V_{Th}/(Z_{Th} + Z_L/n^2) = 10/(128 + 128) = \mathbf{39.06\ mA}$

(c) $v_2 = I_2 Z_L = 156.24\text{x}8\ \text{mV} = 1.25\ \text{V}$

But $v_2 = nv_1$ therefore $v_1 = v_2/n = 4(1.25) = \mathbf{5\ V}$

www.konkur.in

Chapter 13, Solution 55.

We first reflect the 60-Ω resistance to the middle circuit.

$$Z_L^{'} = 20 + \frac{60}{3^2} = 26.67\Omega$$

We now reflect this to the primary side.

$$Z_L = \frac{Z_L^{'}}{4^2} = \frac{26.67}{16} = \mathbf{1.6669\ \Omega}$$

www.konkur.in

Chapter 13, Solution 56.

We apply mesh analysis to the circuit as shown below.

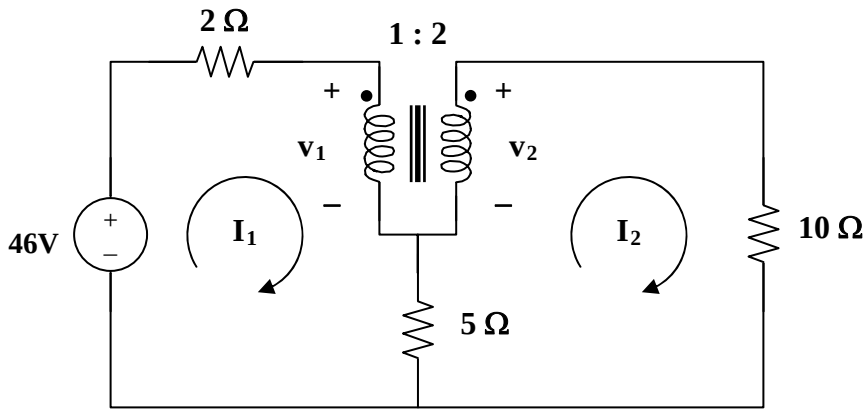

For mesh 1, $46 = 7\mathbf{I_1} - 5\mathbf{I_2} + \mathbf{v_1}$ (1)

For mesh 2, $\mathbf{v_2} = 15\mathbf{I_2} - 5\mathbf{I_1}$ (2)

At the terminals of the transformer,

$$\mathbf{v_2} = n\mathbf{v_1} = 2\mathbf{v_1} \quad (3)$$

$$\mathbf{I_1} = n\mathbf{I_2} = 2\mathbf{I_2} \quad (4)$$

Substituting (3) and (4) into (1) and (2),

$$46 = 9\mathbf{I_2} + \mathbf{v_1} \quad (5)$$

$$\mathbf{v_1} = 2.5\mathbf{I_2} \quad (6)$$

Combining (5) and (6), $46 = 11.5\mathbf{I_2}$ or $I_2 = 4$

$$P_{10} = 0.5|\mathbf{I_2}|^2(10) = \mathbf{80\ watts}.$$

www.konkur.in

Chapter 13, Solution 57.

(a) $Z_L = j3||(12 - j6) = j3(12 - j6)/(12 - j3) = (12 + j54)/17$

Reflecting this to the primary side gives

$Z_{in} = 2 + Z_L/n^2 = 2 + (3 + j13.5)/17 = 2.3168\angle 20.04°$

$I_1 = v_s/Z_{in} = 60\angle 90°/2.3168\angle 20.04° =$ **$25.9\angle 69.96°$ A(rms)**

$I_2 = I_1/n =$ **$12.95\angle 69.96°$ A(rms)**

(b) $60\angle 90° = 2I_1 + v_1$ or $v_1 = j60 - 2I_1 = j60 - 51.8\angle 69.96°$

$v_1 =$ **$21.06\angle 147.44°$ V(rms)**

$v_2 = nv_1 =$ **$42.12\angle 147.44°$ V(rms)**

$v_o = v_2 =$ **$42.12\angle 147.44°$ V(rms)**

(c) $S = v_s I_1^* = (60\angle 90°)(25.9\angle -69.96°) =$ **$1.554\angle 20.04°$ kVA**

www.konkur.in

Chapter 13, Solution 58.

Consider the circuit below.

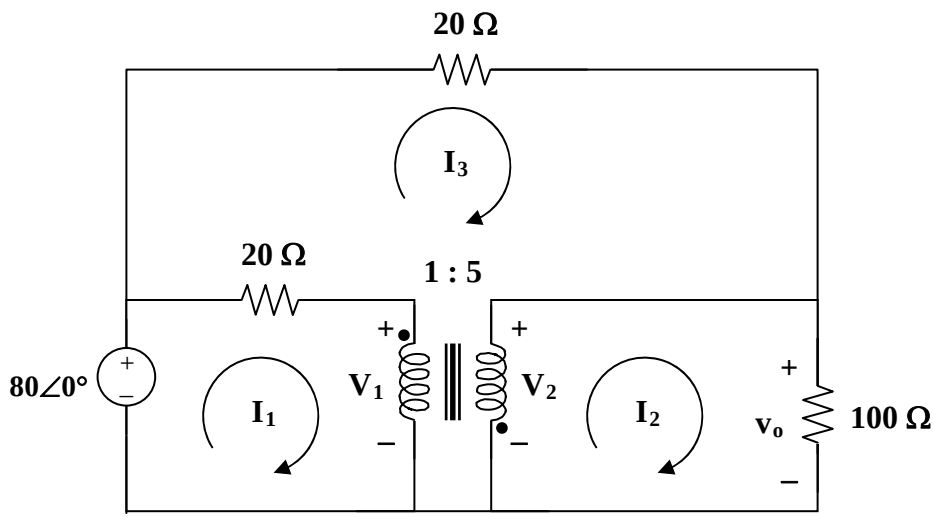

For mesh1, $-80 + 20I_1 - 20I_3 + V_1 = 0$ or
$20I_1 - 20I_3 + V_1 = 80$ (1)

For mesh 2, $V_2 = 100I_2$ or $100I_2 - V_2 = 0$
(2)

For mesh 3, $40I_3 - 20I_1 + V_2 - V_1 = 0$ which leads to
$-20 I_1 + 40I_3 - V_1 + V_2 = 0$ (3)

At the transformer terminals, $V_2 = -nV_1 = -5V_1$ or $5V_1 + V_2$ (4)

$I_1 - I_3 = -n(I_2 - I_3) = -5(I_2 - I_3)$ or
$I_1 + 5I_2 - 6I_3 = 0$ (5)

Solving using MATLAB,

```
>>A = [ 20  0  -20  1  0 ; 0  100  0  0  -1; -20  0  40  -1  1; 0  0  0  5  1;  1  5  -6  0
0 ]

A =

    20     0   -20     1     0
     0   100     0     0    -1
   -20     0    40    -1     1
     0     0     0     5     1
     1     5    -6     0     0
```

www.konkur.in

```
>> B = [ 80  0  0  0  0 ]'

B =

    80
     0
     0
     0
     0

>> Y = inv(A)*B

Y =

    5.9355
    0.5161
    1.4194
  -10.3226
   51.6129
```

P20,1 = 0.5*(I1 – I3)^2*20 = 0.5*(5.9355– 1.4194)^2*20 = 203.95

p_{20}(the one between 1 and 3) = $0.5(20)(I_1 - I_3)^2 = 10(5.9355-1.4194)^2$

= **203.95 watts**

p_{20}(at the top of the circuit) = $0.5(20)I_3^2$ = **20.15 watts**

$p_{100} = 0.5(100)I_2^2$ = **13.318 watts**

www.konkur.in

Chapter 13, Solution 59.

We apply mesh analysis to the circuit as shown below.

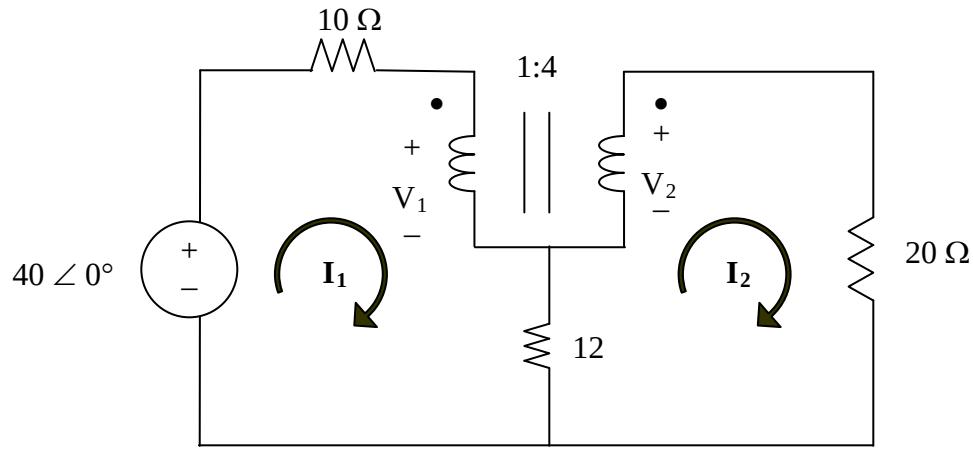

For mesh 1,

$$-40 + 22\mathbf{I_1} - 12\mathbf{I_2} + \mathbf{V_1} = 0 \qquad (1)$$

For mesh 2,

$$-12\mathbf{I_1} + 32\mathbf{I_2} - \mathbf{V_2} = 0 \qquad (2)$$

At the transformer terminals,

$$-4\mathbf{V_1} + \mathbf{V_2} = 0 \qquad (3)$$

$$\mathbf{I_1} - 4\mathbf{I_2} = 0 \qquad (4)$$

Putting (1), (2), (3), and (4) in matrix form, we obtain

$$\begin{bmatrix} 22 & -12 & 1 & 0 \\ -12 & 32 & 0 & -1 \\ 0 & 0 & -4 & 1 \\ 1 & -4 & 0 & 0 \end{bmatrix} \mathrm{I} = \begin{bmatrix} 40 \\ 0 \\ 0 \\ 0 \end{bmatrix}$$

```
>> A=[22,-12,1,0;-12,32,0,-1;0,0,-4,1;1,-4,0,0]
A =
    22   -12     1     0
   -12    32     0    -1
     0     0    -4     1
     1    -4     0     0
```

www.konkur.in

```
>> U=[40;0;0;0]
U =
    40
     0
     0
     0
>> X=inv(A)*U
X =
    2.2222
    0.5556
   -2.2222
   -8.8889
```

For 10-Ω resistor,

$$P_{10} = [(2.222)^2/2]10 = \mathbf{24.69\ W}$$

For 12-Ω resistor,

$$P_{12} = [(2.222–0.5556)^2/2]12 = \mathbf{16.661\ W}$$

For 20-Ω resistor,

$$P_{20} = [(0.5556)^2/2]20 = \mathbf{3.087\ W}.$$

24.69 W, 16.661 W, 3.087 W

www.konkur.in

Chapter 13, Solution 60.

(a) Transferring the 40-ohm load to the middle circuit,

$Z_L' = 40/(n')^2 = 10$ ohms where $n' = 2$

$10||(5 + 10) = 6$ ohms

We transfer this to the primary side.

$Z_{in} = 4 + 6/n^2 = 4 + 0.375 = 4.375$ ohms, where $n = 4$

$I_1 = 120/4.375 =$ **27.43 A** and $I_2 = I_1/n =$ **6.857 A**

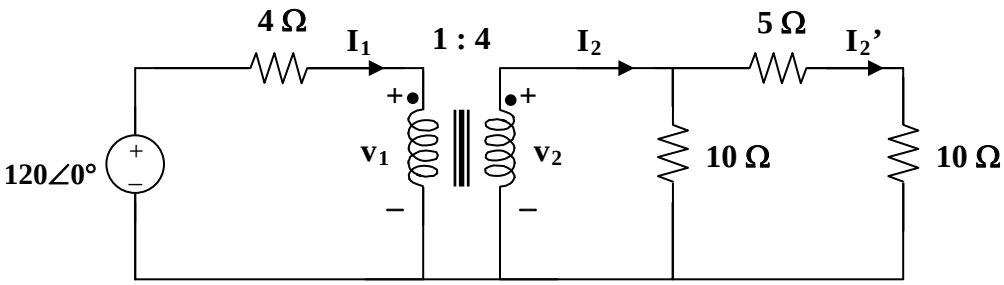

Using current division, $I_2' = (10/25)I_2 = 2.7429$ and

$I_3 = I_2'/n' =$ **1.3714 A**

(b) $p = 0.5(I_3)^2(40) =$ **37.62 watts**

www.konkur.in

Chapter 13, Solution 61.

We reflect the 160-ohm load to the middle circuit.

$$Z_R = Z_L/n^2 = 160/(4/3)^2 = 90 \text{ ohms, where } n = 4/3$$

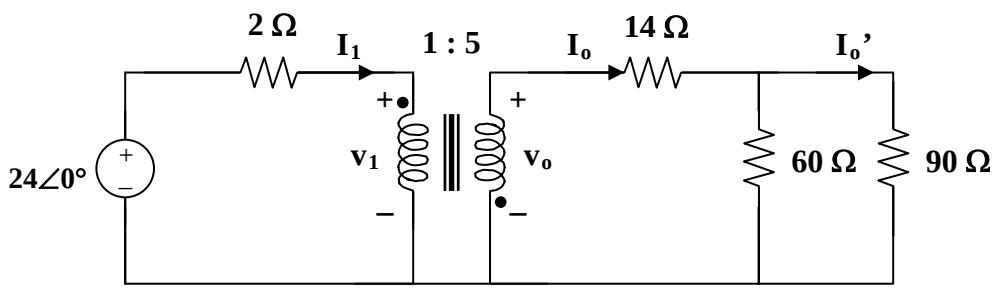

$$14 + 60||90 = 14 + 36 = 50 \text{ ohms}$$

We reflect this to the primary side.

$$Z_R' = Z_L'/(n')^2 = 50/5^2 = 2 \text{ ohms when } n' = 5$$

$$I_1 = 24/(2 + 2) = \mathbf{6A}$$

$$24 = 2I_1 + v_1 \text{ or } v_1 = 24 - 2I_1 = 12 \text{ V}$$

$$v_o = -nv_1 = \mathbf{-60\ V},\ I_o = -I_1/n_1 = -6/5 = -1.2$$

$$I_o' = [60/(60 + 90)]I_o = -0.48\text{A}$$

$$I_2 = -I_o'/n = 0.48/(4/3) = \mathbf{360\ mA}$$

www.konkur.in

Chapter 13, Solution 62.

(a) Reflect the load to the middle circuit.

$\mathbf{Z_L}' = 8 - j20 + (18 + j45)/3^2 = 10 - j15$

We now reflect this to the primary circuit so that

$\mathbf{Z_{in}} = 6 + j4 + (10 - j15)/n^2 = 7.6 + j1.6 = 7.767\angle 11.89°$, where $n = 5/2 = 2.5$

$\mathbf{I_1} = 40/\mathbf{Z_{in}} = 40/7.767\angle 11.89° = 5.15\angle -11.89°$

$$\mathbf{S} = \mathbf{v_s I_1}^* = (40\angle 0°)(5.15\angle 11.89°) = \mathbf{206\angle 11.89°\ VA}$$

(b) $\mathbf{I_2} = -\mathbf{I_1}/n, \quad n = 2.5$

$\mathbf{I_3} = -\mathbf{I_2}/n', \quad n = 3$

$\mathbf{I_3} = \mathbf{I_1}/(nn') = 5.15\angle -11.89°/(2.5x3) = 0.6867\angle -11.89°$

$$p = |\mathbf{I_2}|^2(18) = 18(0.6867)^2 = \mathbf{8.488\ watts}$$

www.konkur.in

Chapter 13, Solution 63.

Reflecting the (9 + j18)-ohm load to the middle circuit gives,

$Z_{in}' = 7 - j6 + (9 + j18)/(n')^2 = 7 - j6 + 1 + j2 = 8 - j4$ when $n' = 3$

Reflecting this to the primary side,

$Z_{in} = 1 + Z_{in}'/n^2 = 1 + 2 - j = 3 - j$, where $n = 2$

$I_1 = 12\angle 0°/(3 - j) = 12/3.162\angle -18.43° =$ **$3.795\angle 18.43$A**

$I_2 = I_1/n =$ **$1.8975\angle 18.43°$ A**

$I_3 = -I_2/n^2 =$ **$632.5\angle 161.57°$ mA**

www.konkur.in

Chapter 13, Solution 64.

The Thevenin equivalent to the left of the transformer is shown below.

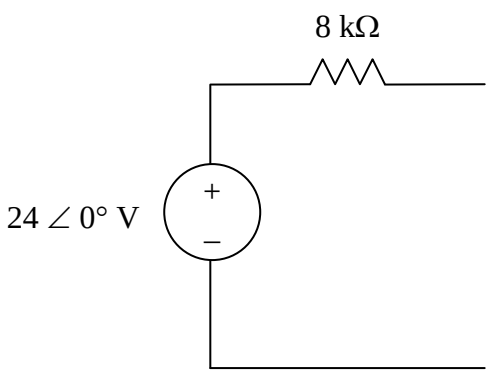

The reflected load impedance is

$$Z_L^{'} = \frac{Z_L}{n^2} = \frac{30k}{n^2}$$

For maximum power transfer,

$$8k\Omega = \frac{30k\Omega}{n^2} \longrightarrow n^2 = 30/8 = 3.75$$

n =**1.9365**

www.konkur.in

Chapter 13, Solution 65.

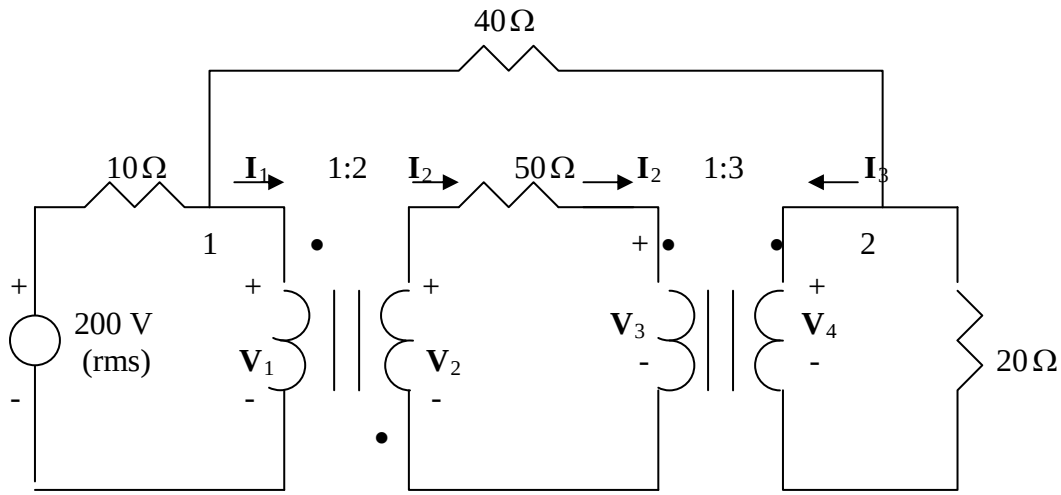

At node 1,

$$\frac{200 - V_1}{10} = \frac{V_1 - V_4}{40} + I_1 \quad \longrightarrow \quad 200 = 1.25V_1 - 0.25V_4 + 10I_1 \qquad (1)$$

At node 2,

$$\frac{V_1 - V_4}{40} = \frac{V_4}{20} + I_3 \quad \longrightarrow \quad V_1 = 3V_4 + 40I_3 \qquad (2)$$

At the terminals of the first transformer,

$$\frac{V_2}{V_1} = -2 \quad \longrightarrow \quad V_2 = -2V_1 \qquad (3)$$

$$\frac{I_2}{I_1} = -1/2 \quad \longrightarrow \quad I_1 = -2I_2 \qquad (4)$$

For the middle loop,

$$-V_2 + 50I_2 + V_3 = 0 \quad \longrightarrow \quad V_3 = V_2 - 50I_2 \qquad (5)$$

At the terminals of the second transformer,

$$\frac{V_4}{V_3} = 3 \quad \longrightarrow \quad V_4 = 3V_3 \qquad (6)$$

www.konkur.in

$$\frac{I_3}{I_2} = -1/3 \quad \longrightarrow \quad I_2 = -3I_3 \tag{7}$$

We have seven equations and seven unknowns. Combining (1) and (2) leads to

$$200 = 3.5V_4 + 10I_1 + 50I_3$$

But from (4) and (7), $I_1 = -2I_2 = -2(-3I_3) = 6I_3$. Hence

$$200 = 3.5V_4 + 110I_3 \tag{8}$$

From (5), (6), (3), and (7),

$$V_4 = 3(V_2 - 50I_2) = 3V_2 - 150I_2 = -6V_1 + 450I_3$$

Substituting for V_1 in (2) gives

$$V_4 = -6(3V_4 + 40I_3) + 450I_3 \quad \longrightarrow \quad I_3 = \frac{19}{210}V_4 \tag{9}$$

Substituting (9) into (8) yields

$$200 = 13.452V_4 \quad \longrightarrow \quad V_4 = 14.87$$

$$\boldsymbol{P = \frac{V^2{}_4}{20} = \underline{11.05\ \mathrm{W}}}$$

www.konkur.in

Chapter 13, Solution 66.

Design a problem to help other students to better understand how the ideal autotransformer works.

Although there are many ways to solve this problem, this is an example based on the same kind of problem asked in the third edition.

Problem

An ideal autotransformer with a 1:4 step-up turns ratio has its secondary connected to a 120-Ω load and the primary to a 420-V source. Determine the primary current.

Solution

$$v_1 = 420 \text{ V} \qquad (1)$$

$$v_2 = 120I_2 \qquad (2)$$

$$v_1/v_2 = 1/4 \text{ or } v_2 = 4v_1 \qquad (3)$$

$$I_1/I_2 = 4 \text{ or } I_1 = 4\ I_2 \qquad (4)$$

Combining (2) and (4),

$$v_2 = 120[(1/4)I_1] = 30\ I_1$$

$$4v_1 = 30I_1$$

$$4(420) = 1680 = 30I_1 \text{ or } I_1 = \mathbf{56\ A}$$

www.konkur.in

Chapter 13, Solution 67.

(a) $$\frac{V_1}{V_2} = \frac{N_1 + N_2}{N_2} = \frac{1}{0.4} \longrightarrow V_2 = 0.4V_1 = 0.4x400 = \underline{160\text{ V}}$$

(b) $$S_2 = I_2V_2 = 5{,}000 \longrightarrow I_2 = \frac{5000}{160} = \underline{31.25\text{ A}}$$

(c) $$S_2 = S_1 = I_1V_1 = 5{,}000 \longrightarrow I_1 = \frac{5000}{400} = \underline{12.5\text{ A}}$$

www.konkur.in

Chapter 13, Solution 68.

This is a step-up transformer.

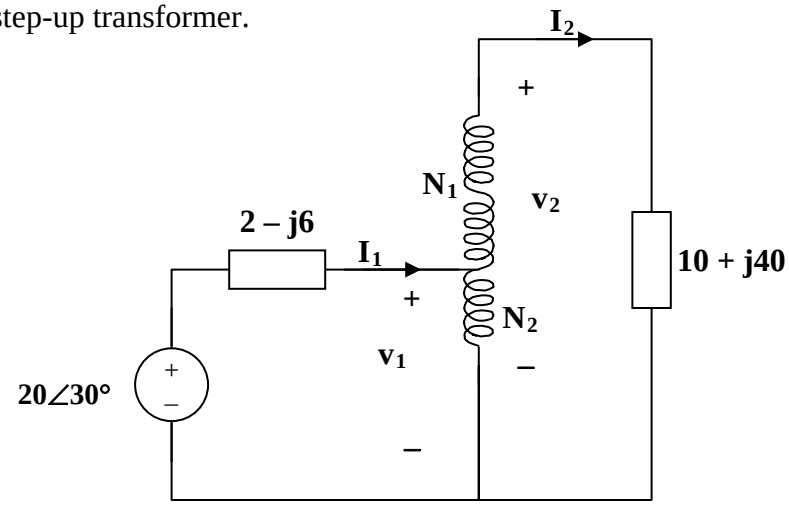

For the primary circuit, $20\angle 30° = (2 - j6)\mathbf{I_1} + \mathbf{v_1}$ (1)

For the secondary circuit, $\mathbf{v_2} = (10 + j40)\mathbf{I_2}$ (2)

At the autotransformer terminals,

$$\mathbf{v_1}/\mathbf{v_2} = N_1/(N_1 + N_2) = 200/280 = 5/7,$$

$$\text{thus } \mathbf{v_2} = 7\mathbf{v_1}/5 \quad (3)$$

Also, $\mathbf{I_1}/\mathbf{I_2} = 7/5$ or $\mathbf{I_2} = 5\mathbf{I_1}/7$ (4)

Substituting (3) and (4) into (2), $\mathbf{v_1} = (10 + j40)25\mathbf{I_1}/49$

Substituting that into (1) gives $20\angle 30° = (7.102 + j14.408)\mathbf{I_1}$

$$\mathbf{I_1} = 20\angle 30°/16.063\angle 63.76° = \mathbf{1.245\angle -33.76°\ A}$$

$$\mathbf{I_2} = 5\mathbf{I_1}/7 = \mathbf{889.3\angle -33.76°\ mA}$$

$$\mathbf{I_o} = \mathbf{I_1} - \mathbf{I_2} = [(5/7) - 1]\mathbf{I_1} = -2\mathbf{I_1}/7 = \mathbf{355.7\angle 146.2°\ mA}$$

$$p = |\mathbf{I_2}|^2 R = (0.8893)^2(10) = \mathbf{7.51\ watts}$$

www.konkur.in

Chapter 13, Solution 69.

We can find the Thevenin equivalent.

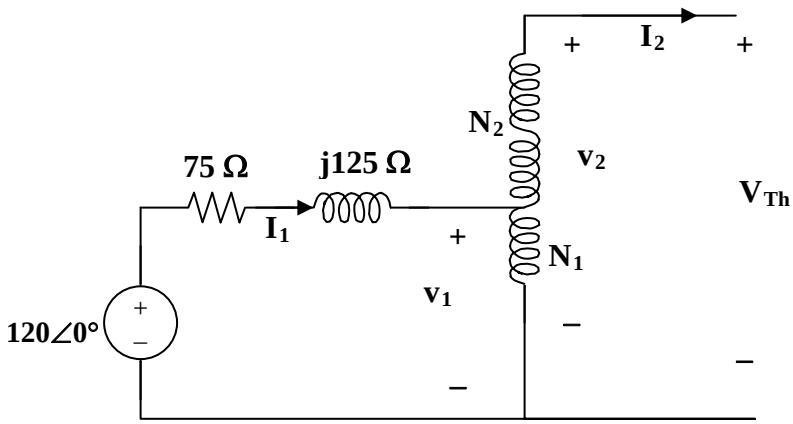

$$I_1 = I_2 = 0$$

As a step up transformer, $v_1/v_2 = N_1/(N_1 + N_2) = 600/800 = 3/4$

$$v_2 = 4v_1/3 = 4(120)/3 = 160\angle 0° \text{ rms} = V_{Th}.$$

To find Z_{Th}, connect a 1-V source at the secondary terminals. We now have a step-down transformer.

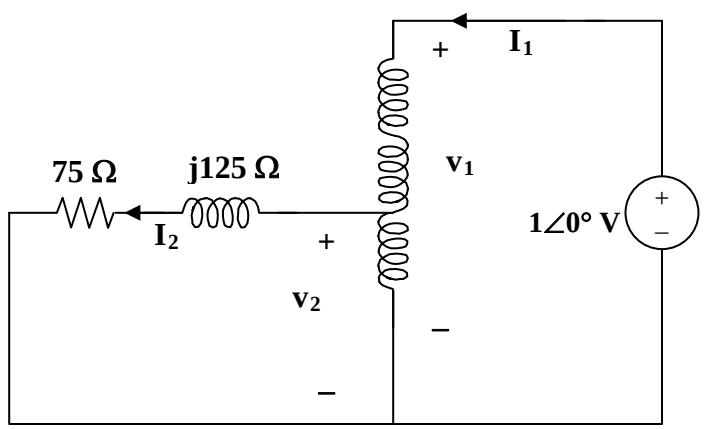

$$v_1 = 1V, \; v_2 = I_2(75 + j125)$$

But $v_1/v_2 = (N_1 + N_2)/N_1 = 800/200$ which leads to $v_1 = 4v_2 = 1$

and $v_2 = 0.25$

$I_1/I_2 = 200/800 = 1/4$ which leads to $I_2 = 4I_1$

www.konkur.in

Hence $0.25 = 4I_1(75 + j125)$ or $I_1 = 1/[16(75 + j125)$

$Z_{Th} = 1/I_1 = 16(75 + j125)$

Therefore, $Z_L = Z_{Th}^* =$ **(1.2 – j2) kΩ**

Since V_{Th} is rms, $p = (|V_{Th}|/2)^2/R_L = (80)^2/1200 =$ **5.333 watts**

www.konkur.in

Chapter 13, Solution 70.

This is a step-down transformer.

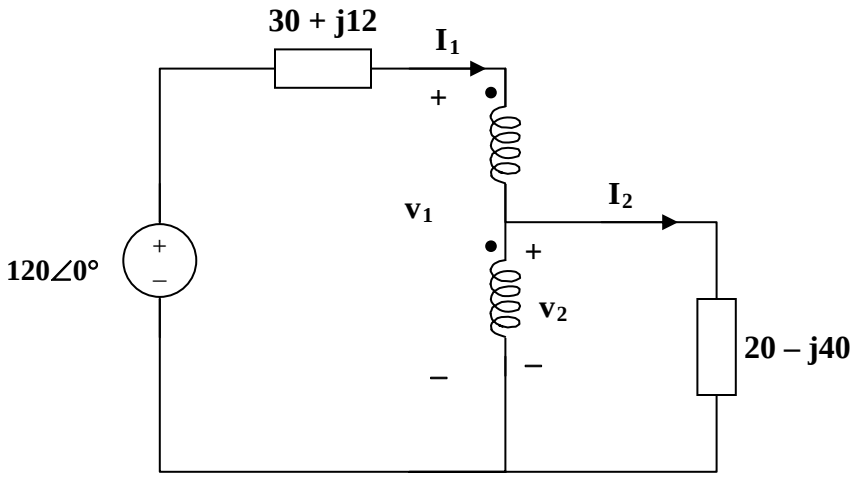

$I_1/I_2 = N_2/(N_1 + N_2) = 200/1200 = 1/6$, or $I_1 = I_2/6$ (1)

$v_1/v_2 = (N_2 + N_2)/N_2 = 6$, or $v_1 = 6v_2$ (2)

For the primary loop, $120 = (30 + j12)I_1 + v_1$ (3)

For the secondary loop, $v_2 = (20 - j40)I_2$ (4)

Substituting (1) and (2) into (3),

$$120 = (30 + j12)(I_2/6) + 6v_2$$

and substituting (4) into this yields

$$120 = (49 - j38)I_2 \text{ or } I_2 = 1.935\angle 37.79°$$

$p = |I_2|^2(20) =$ **74.9 watts**.

www.konkur.in

Chapter 13, Solution 71.

$$Z_{in} = V_1/I_1$$

But $V_1I_1 = V_2I_2$, or $V_2 = I_2Z_L$ and $I_1/I_2 = N_2/(N_1 + N_2)$

Hence $V_1 = V_2I_2/I_1 = Z_L(I_2/I_1)I_2 = Z_L(I_2/I_1)^2I_1$

$$V_1/I_1 = Z_L[(N_1 + N_2)/N_2]^2$$

$$Z_{in} = \mathbf{[1 + (N_1/N_2)]^2Z_L}$$

www.konkur.in

Chapter 13, Solution 72.

(a) Consider just one phase at a time.

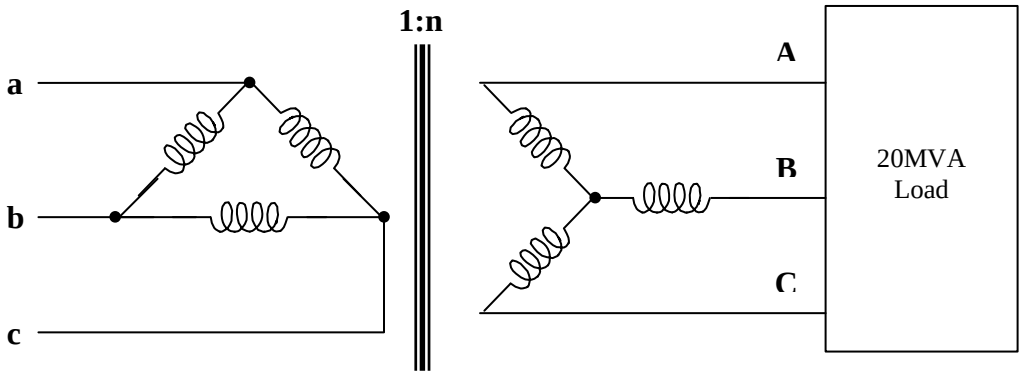

$$n = V_L/\sqrt{3}V_{Lp} = 7200/(12470\sqrt{3}) = \mathbf{1/3}$$

(b) The load carried by each transformer is 60/3 = 20 MVA.

Hence I_{Lp} = 20 MVA/12.47 k = **1604 A**

I_{Ls} = 20 MVA/7.2 k = **2778 A**

(c) The current in incoming line a, b, c is

$$\sqrt{3}I_{Lp} = \sqrt{3}\text{x}1603.85 = \mathbf{2778\ A}$$

Current in each outgoing line A, B, C is

$$2778/(n\sqrt{3}) = \mathbf{4812\ A}$$

www.konkur.in

Chapter 13, Solution 73.

(a) This is a **three-phase Δ-Y transformer**.

(b) $V_{Ls} = nv_{Lp}/\sqrt{3} = 450/(3\sqrt{3}) = 86.6$ V, where $n = 1/3$

As a Y-Y system, we can use per phase equivalent circuit.

$I_a = V_{an}/Z_Y = 86.6\angle 0°/(8 - j6) = 8.66\angle 36.87°$

$I_c = I_a\angle 120° =$ **$8.66\angle 156.87°$ A**

$I_{Lp} = n\sqrt{3}\, I_{Ls}$

$I_1 = (1/3)\sqrt{3}\,(8.66\angle 36.87°) = 5\angle 36.87°$

$I_2 = I_1\angle -120° =$ **$5\angle -83.13°$ A**

(c) $p = 3|I_a|^2(8) = 3(8.66)^2(8) =$ **1.8 kw**.

www.konkur.in

Chapter 13, Solution 74.

(a) This is a **Δ-Δ connection**.

(b) The easy way is to consider just one phase.

$$1:n = 4:1 \text{ or } n = 1/4$$

$n = V_2/V_1$ which leads to $V_2 = nV_1 = 0.25(2400) = 600$

$$\text{i.e. } V_{Lp} = 2400 \text{ V and } V_{Ls} = 600 \text{ V}$$

$S = p/\cos\theta = 120/0.8 \text{ kVA} = 150 \text{ kVA}$

$$p_L = p/3 = 120/3 = 40 \text{ kw}$$

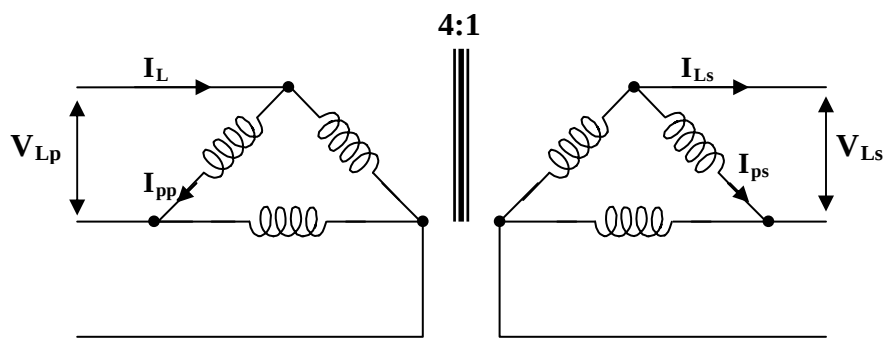

But $p_{Ls} = V_{ps}I_{ps}$

For the Δ-load, $I_L = \sqrt{3}\, I_p$ and $V_L = V_p$

Hence, $I_{ps} = 40{,}000/600 = 66.67$ A

$$I_{Ls} = \sqrt{3}\, I_{ps} = \sqrt{3} \times 66.67 = \mathbf{115.48\ A}$$

(c) Similarly, for the primary side

$$p_{pp} = V_{pp}I_{pp} = p_{ps} \text{ or } I_{pp} = 40{,}000/2400 = \mathbf{16.667\ A}$$

$$\text{and } I_{Lp} = \sqrt{3}\, I_p = \mathbf{28.87\ A}$$

(d) Since $S = 150$ kVA therefore $S_p = S/3 =$ **50 kVA**

www.konkur.in

Chapter 13, Solution 75.

(a) $n = V_{Ls}/(\sqrt{3}\,V_{Lp}) = 900/(4500\sqrt{3}) = \mathbf{0.11547}$

(b) $S = \sqrt{3}\,V_{Ls}I_{Ls}$ or $I_{Ls} = 120{,}000/(900\sqrt{3}) = \mathbf{76.98\ A}$

$I_{Ls} = I_{Lp}/(n\sqrt{3}) = 76.98/(2.887\sqrt{3}) = \mathbf{15.395\ A}$

www.konkur.in

Chapter 13, Solution 76.

Using Fig. 13.138, design a problem to help other students to better understand a wye-delta, three-phase transformer and how they work.

Although there are many ways to solve this problem, this is an example based on the same kind of problem asked in the third edition.

Problem

A Y-Δ three-phase transformer is connected to a 60-kVA load with 0.85 power factor (leading) through a feeder whose impedance is 0.05 + j0.1Ω per phase, as shown in Fig. 13.137 below. Find the magnitude of:

(a) the line current at the load,

(b) the line voltage at the secondary side of the transformer,

(c) the line current at the primary side of the transformer.

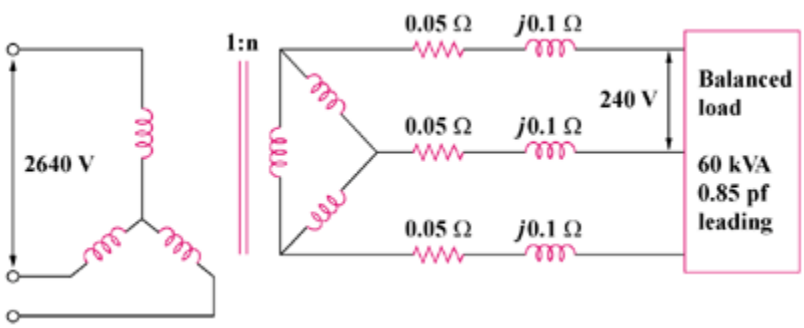

Figure 13.137

Solution

(a) At the load, $V_L = 240\text{ V} = V_{AB}$

$$V_{AN} = V_L/\sqrt{3} = 138.56\text{ V}$$

Since $S = \sqrt{3}\,V_L I_L$ then $I_L = 60{,}000/(240\sqrt{3}) =$ **144.34 A**

www.konkur.in

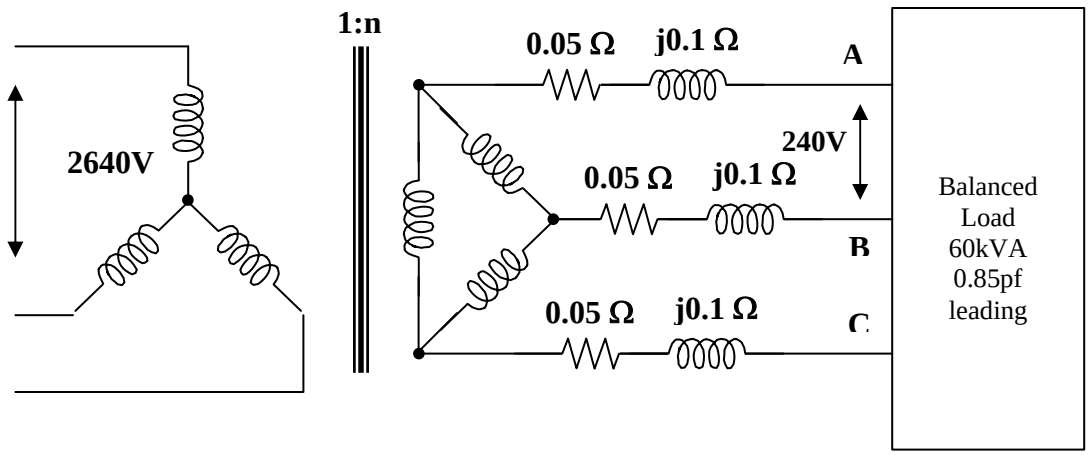

(b) Let $V_{AN} = |V_{AN}|\angle 0° = 138.56\angle 0°$

$\cos\theta = pf = 0.85$ or $\theta = 31.79°$

$I_{AA'} = I_L\angle\theta = 144.34\angle 31.79°$

$V_{A'N'} = ZI_{AA'} + V_{AN}$

$= 138.56\angle 0° + (0.05 + j0.1)(144.34\angle 31.79°)$

$= 138.03\angle 6.69°$

$V_{Ls} = V_{A'N'}\sqrt{3} = 138.03\sqrt{3} =$ **239.1 V**

(c) For Y-Δ connections,

$n = \sqrt{3}\,V_{Ls}/V_{ps} = \sqrt{3}\,x238.7/2640 = 0.1569$

$f_{Lp} = nI_{Ls}/\sqrt{3} = 0.1569x144.34/\sqrt{3} =$ **13.05 A**

www.konkur.in

Chapter 13, Solution 77.

(a) This is a single phase transformer. $V_1 = 13.2$ kV, $V_2 = 120$ V

$n = V_2/V_1 = 120/13{,}200 = 1/110$, therefore $n =$ **1/110**

or 110 turns on the primary to every turn on the secondary.

(b) $P = VI$ or $I = P/V = 100/120 = 0.8333$ A

$I_1 = nI_2 = 0.8333/110 =$ **7.576 mA**

www.konkur.in

Chapter 13, Solution 78.

We convert the reactances to their inductive values.

$$X = \omega L \quad \longrightarrow \quad L = \frac{X}{\omega}$$

The schematic is as shown below.

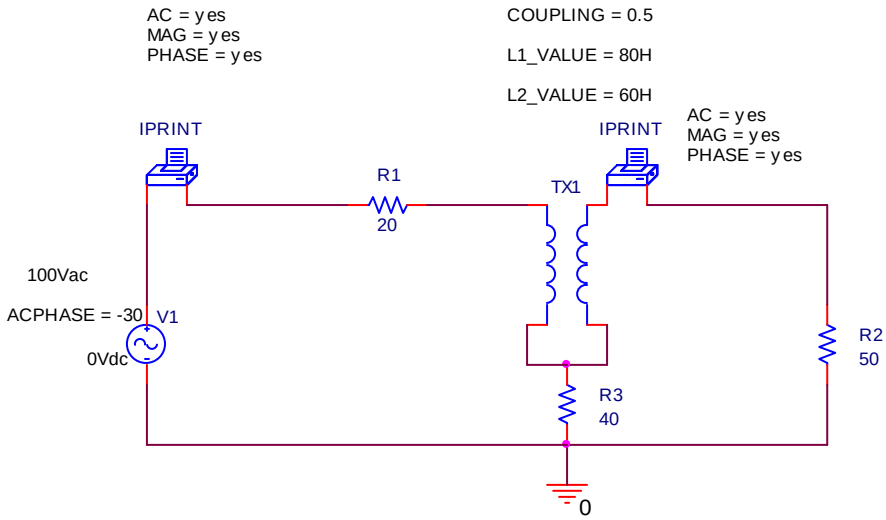

FREQ IM(V_PRINT1)IP(V_PRINT1)

1.592E-01 1.347E+00 -8.489E+01

FREQ IM(V_PRINT2)IP(V_PRINT2)

1.592E-01 6.588E-01 -7.769E+01

Thus,

$\mathbf{I_1 = 1.347\angle{-84.89^\circ}}$ **amps** and $\mathbf{I_2 = 658.8\angle{-77.69^\circ}}$ **mA**

www.konkur.in

Chapter 13, Solution 79.

The schematic is shown below.

$$k_1 = 15/\sqrt{5000} = 0.2121,\ k_2 = 10/\sqrt{8000} = 0.1118$$

In the AC Sweep box, we type Total Pts = 1, Start Freq = 0.1592, and End Freq = 0.1592. After the circuit is saved and simulated, the output includes

FREQ	IM(V_PRINT1)	IP(V_PRINT1)
1.592 E–01	4.068 E–01	–7.786 E+01
FREQ	IM(V_PRINT2)	IP(V_PRINT2)
1.592 E–01	1.306 E+00	–6.801 E+01
FREQ	IM(V_PRINT3)	IP(V_PRINT3)
1.592 E–01	1.336 E+00	–5.492 E+01

Thus, $\mathbf{I_1 = 1.306\angle{-68.01°}\ A}$, $\mathbf{I_2 = 406.8\angle{-77.86°}\ mA}$, $\mathbf{I_3 = 1.336\angle{-54.92°}\ A}$

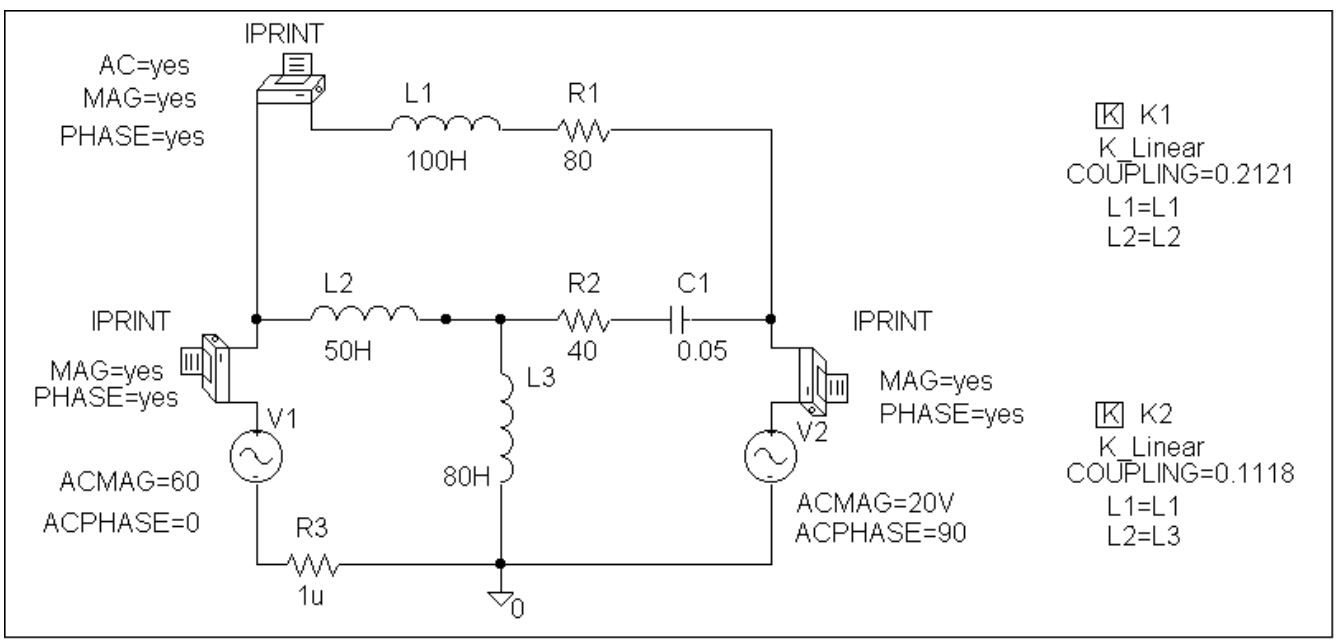

www.konkur.in

Chapter 13, Solution 80.

The schematic is shown below.

$$k_1 = 10/\sqrt{40x80} = 0.1768,\ k_2 = 20/\sqrt{40x60} = 0.4082$$

$$k_3 = 30/\sqrt{80x60} = 0.433$$

In the AC Sweep box, we set Total Pts = 1, Start Freq = 0.1592, and End Freq = 0.1592. After the simulation, we obtain the output file which includes

FREQ	IM(V_PRINT1)	IP(V_PRINT1)
1.592 E–01	1.304 E+00	6.292 E+01

i.e. I_o = **1.304∠62.92° A**

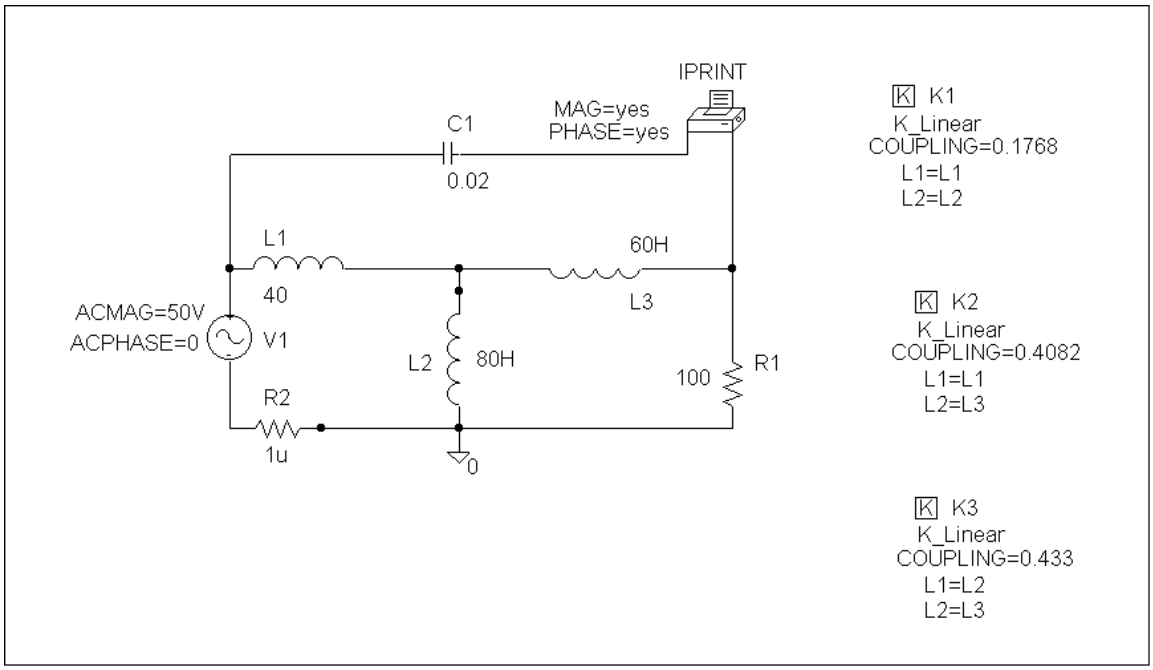

www.konkur.in

Chapter 13, Solution 81.

The schematic is shown below.

$$k_1 = 2/\sqrt{4x8} = 0.3535, \; k_2 = 1/\sqrt{2x8} = 0.25$$

In the AC Sweep box, we let Total Pts = 1, Start Freq = 100, and End Freq = 100. After simulation, the output file includes

FREQ	IM(V_PRINT1)	IP(V_PRINT1)
1.000 E+02	1.0448 E–01	1.396 E+01

FREQ	IM(V_PRINT2)	IP(V_PRINT2)
1.000 E+02	2.954 E–02	–1.438 E+02

FREQ	IM(V_PRINT3)	IP(V_PRINT3)
1.000 E+02	2.088 E–01	2.440 E+01

i.e. I_1 = **104.5∠13.96° mA**, I_2 = **29.54∠–143.8° mA**,

I_3 = **208.8∠24.4° mA**.

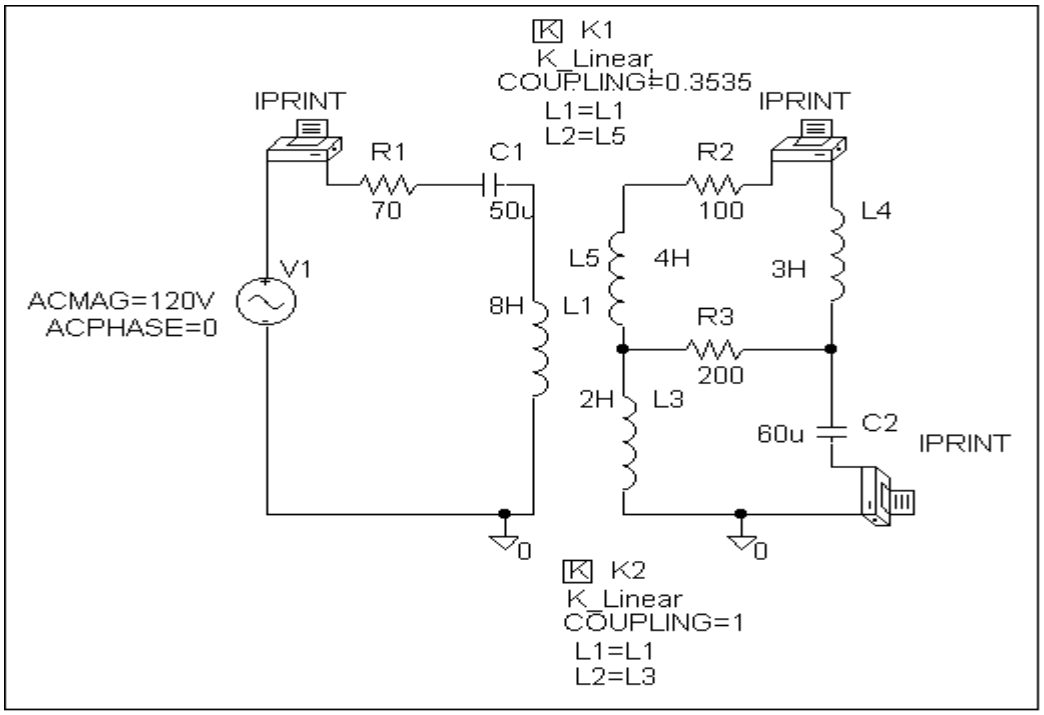

www.konkur.in

Chapter 13, Solution 82.

The schematic is shown below. In the AC Sweep box, we type Total Pts = 1, Start Freq = 0.1592, and End Freq = 0.1592. After simulation, we obtain the output file which includes

FREQ	IM(V_PRINT1)	IP(V_PRINT1)
1.592 E–01	1.955 E+01	8.332 E+01

FREQ	IM(V_PRINT2)	IP(V_PRINT2)
1.592 E–01	6.847 E+01	4.640 E+01

FREQ	IM(V_PRINT3)	IP(V_PRINT3)
1.592 E–01	4.434 E–01	–9.260 E+01

i.e. V_1 = **19.55∠83.32° V**, V_2 = **68.47∠46.4° V**,

I_o = **443.4∠–92.6° mA**.

These answers are incorrect, we need to adjust the magnitude of the inductances.

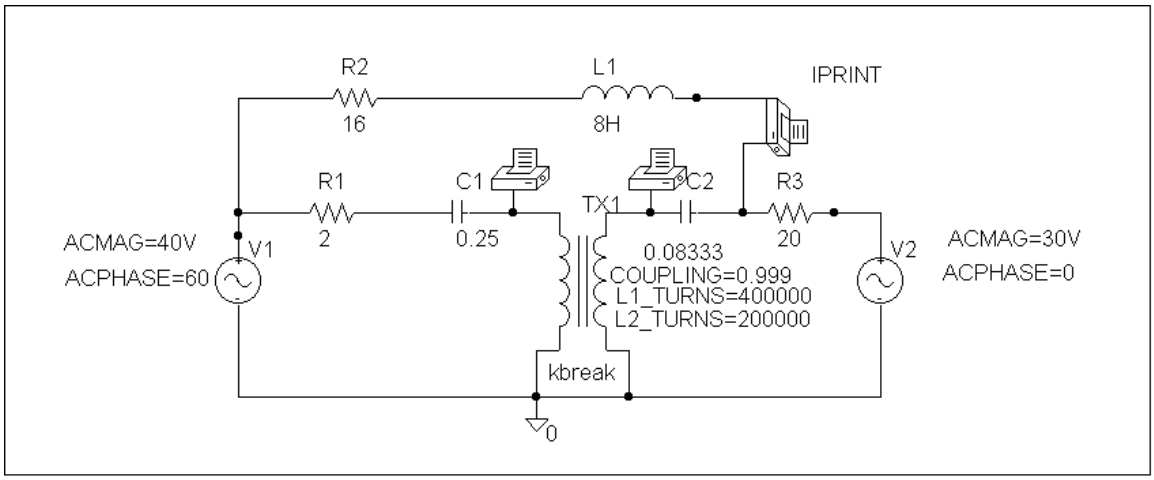

www.konkur.in

Chapter 13, Solution 83.

The schematic is shown below. In the AC Sweep box, we set Total Pts = 1, Start Freq = 0.1592, and End Freq = 0.1592. After simulation, the output file includes

FREQ	IM(V_PRINT1)	IP(V_PRINT1)
1.592 E–01	1.080 E+00	3.391 E+01

FREQ	VM($N_0001)	VP($N_0001)
1.592 E–01	1.514 E+01	–3.421 E+01

i.e. $\mathbf{i_X = 1.08\angle 33.91°\ A}$, $\mathbf{V_x = 15.14\angle -34.21°\ V}$.

This is most likely incorrect and needs to have the values of turns changed.

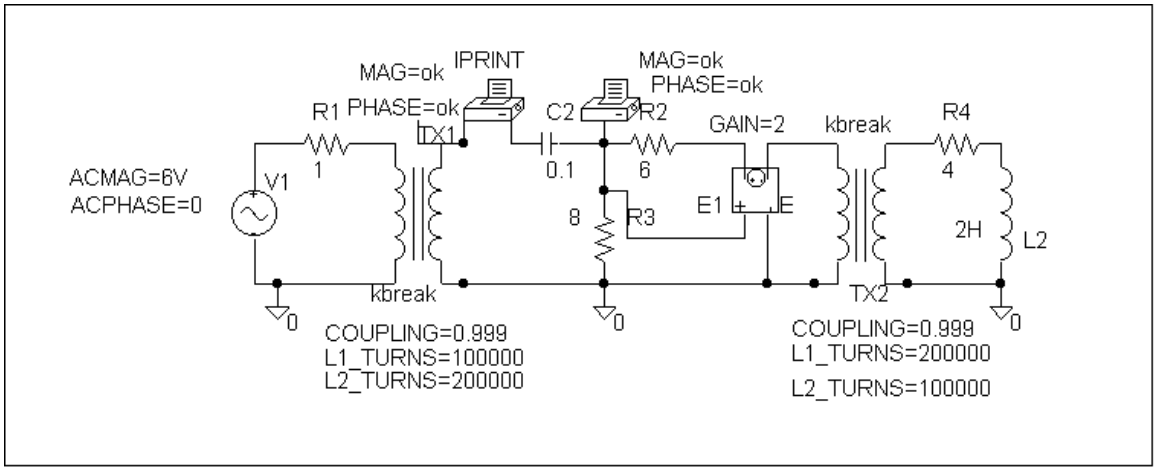

Checking with hand calculations.

Loop 1. $-6 + 1I_1 + V_1 = 0$ or $I_1 + V_1 = 6$ (1)

Loop 2. $-V_2 - j10I_2 + 8(I_2 - I_3) = 0$ or $(8-j10)I_2 - 8I_3 - V_2 = 0$ (2)

Loop 3. $8(I_3 - I_2) + 6I_3 + 2V_x + V_3 = 0$ or $-8I_2 + 14I_3 + V_3 + 2V_x = 0$ but $V_x = 8(I_2 - I_3)$, therefore we get $8I_2 - 2I_3 + V_3 = 0$ (3)

Loop 4. $-V_4 + (4+j2)I_4 = 0$ or $(4+j2)I_4 - V_4 = 0$ (4)

We also need the constraint equations, $V_2 = 2V_1$, $I_1 = 2I_2$, $V_3 = 2V_4$, and $I_4 = 2I_3$. Finally, $I_x = I_2$ and $V_x = 8(I_2 - I_3)$.

www.konkur.in

We can eliminate the voltages from the equations (we only need I_2 and I_3 to obtain the required answers) by,

$$(1)+0.5(2) = I_1 + (4–j5)I_2 – 4I_3 = 6 \text{ and}$$

$$0.5(3) + (4) = 4I_2 – I_3 + (4+j2)I_4 = 0.$$

Next we use $I_1 = 2I_2$ and $I_4 = 2I_3$ to end up with the following equations,

$$(6–j5)I_2 – 4I_3 = 6 \text{ and } 4I_2 + (7+j4)I_3 = 0 \text{ or } I_2 = –[(7+j4)I_3]/4 = (–1.75–j)I_3$$

$$= (2.01556\angle–150.255°)I_3$$

This leads to $(6–j5)(–1.75–j)I_3 – 4I_3 = (–10.5–5–4+j(8.75–6))I_3 = (–19.5+j2.75)I_3 = 6$ or

$$I_3 = 6/(19.69296\angle171.973°) = 0.304677\angle–171.973° \text{ amps}$$

$$= –0.301692–j0.042545.$$

$$I_2 = (–1.75–j)(0.304677\angle–171.973°)$$

$$= (2.01556\angle–150.255°)(0.304677\angle–171.973°)$$

$$= 614.096\angle37.772° \text{ mA} = 0.48541+j0.37615$$

$$\text{and } I_2 – I_3 = 0.7871+j0.4187 = 0.89154\angle28.01°.$$

Therefore,

www.konkur.in

$$V_x = 8(0.854876\angle 22.97°) = \mathbf{7.132\angle 28.01°\ V}$$

$$I_x = I_2 = \mathbf{614.1\angle 37.77°\ mA}.$$

Checking with MATLAB we get A and X from equations (1) – (4) and the four constraint equations.

```
>> A = [1 0 0 0 1 0 0 0;0 (8-10j) -8 0 0 -1 0 0;0 8 -2 0 0 0 1 0;0 0 0 (4+2j) 0 0 0 -1;0 0 0 0 -2 1 0
0;1 -2 0 0 0 0 0 0;0 0 0 0 0 0 1 -2;0 0 -2 1 0 0 0 0]

A =

   1.0000         0         0         0    1.0000         0         0
0
        0    8.0000 -10.0000i  -8.0000         0         0   -1.0000         0
0
        0    8.0000   -2.0000         0         0         0    1.0000
0
        0         0         0    4.0000 + 2.0000i         0         0         0   -
1.0000
        0         0         0         0   -2.0000    1.0000         0
0
   1.0000   -2.0000         0         0         0         0         0
0
        0         0         0         0         0         0    1.0000   -
2.0000
        0         0   -2.0000    1.0000         0         0         0
0

>> X = [6;0;0;0;0;0;0;0]

X =

     6
     0
     0
     0
```

www.konkur.in

0
0
0
0

```
>> Y = inv(A)*X

Y =
```

$0.9708 + 0.7523i = I_1 = 1.2817\angle 37.773°$ amps

$0.4854 + 0.3761i = I_2 = 614.056\angle 37.769°$ mA $= I_x$

$-0.3017 - 0.0425i = I_3 = 0.30468\angle -171.982°$ amps

$-0.6034 - 0.0851i = I_4$
$5.0292 - 0.7523i = V_1$
$10.0583 - 1.5046i = V_2$
$-4.4867 - 3.0943i = V_3$
$-2.2434 - 1.5471i = V_4$

$I_x = 614.1\angle 37.77°$ mA

Finally, $V_x = 8(I_2 - I_3) = 8(0.7871+j0.4186) = 8(0.891489\angle 28.01°)$

$= 7.132\angle 28.01°$ volts

www.konkur.in

www.konkur.in

Chapter 13, Solution 84.

The schematic is shown below. we set Total Pts = 1, Start Freq = 0.1592, and End Freq = 0.1592. After simulation, the output file includes

FREQ	IM(V_PRINT1)	IP(V_PRINT1)
1.592 E–01	4.028 E+00	–5.238 E+01

FREQ	IM(V_PRINT2)	IP(V_PRINT2)
1.592 E–01	2.019 E+00	–5.211 E+01

FREQ	IM(V_PRINT3)	IP(V_PRINT3)
1.592 E–01	1.338 E+00	–5.220 E+01

i.e. I_1 = **4.028∠–52.38° A**, I_2 = **2.019∠–52.11° A**,

I_3 = **1.338∠–52.2° A**.

Dot convention is wrong.

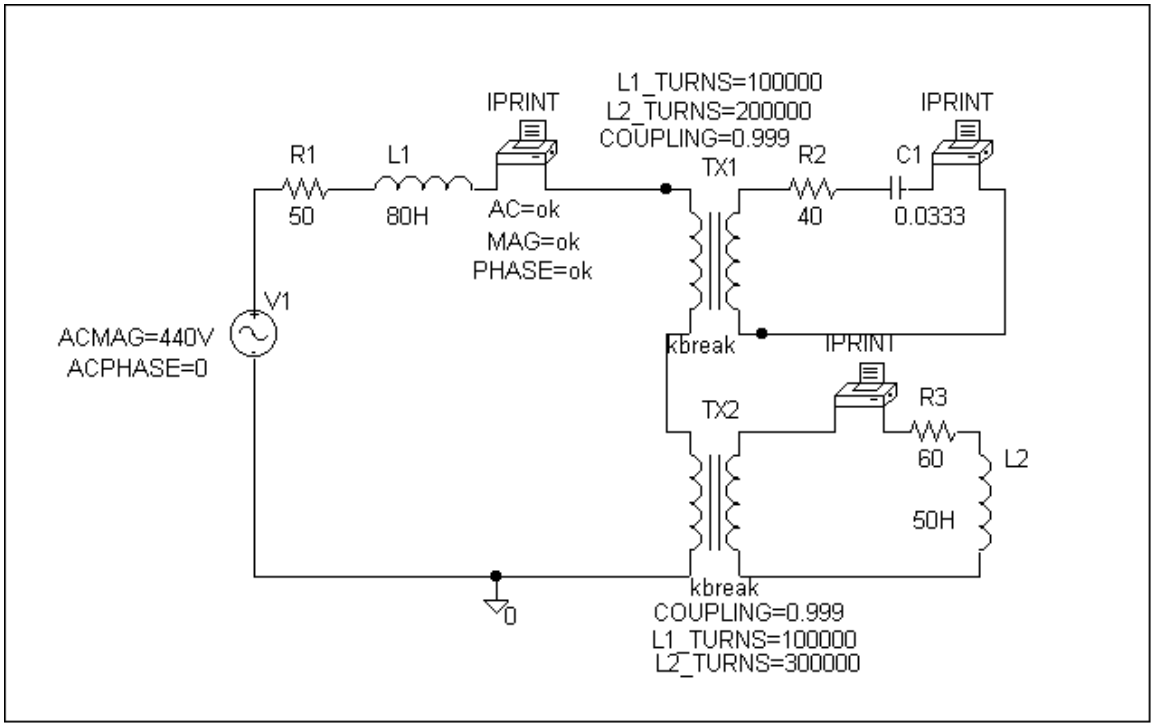

www.konkur.in

Chapter 13, Solution 85.

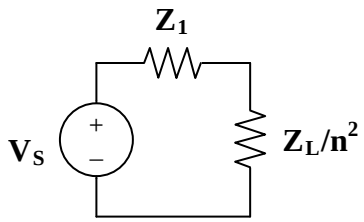

For maximum power transfer,

$Z_1 = Z_L/n^2$ or $n^2 = Z_L/Z_1 = 8/7200 = 1/900$

$n = 1/30 = N_2/N_1$. Thus $N_2 = N_1/30 = 3000/30 =$ **100 turns**.

www.konkur.in

Chapter 13, Solution 86.

$$n = N_2/N_1 = 48/2400 = 1/50$$

$$Z_{Th} = Z_L/n^2 = 3/(1/50)^2 = \mathbf{7.5\ k\Omega}$$

www.konkur.in

Chapter 13, Solution 87.

$$Z_{Th} = Z_L/n^2 \text{ or } n = \sqrt{Z_L / Z_{Th}} = \sqrt{75/300} = \mathbf{0.5}$$

www.konkur.in

Chapter 13, Solution 88.

$n = V_2/V_1 = I_1/I_2$ or $I_2 = I_1/n = 2.5/0.1 = 25$ A

$p = IV = 25x12.6 =$ **315 watts**

www.konkur.in

Chapter 13, Solution 89.

$n = V_2/V_1 = 120/240 =$ **0.5**

$S = I_1V_1$ or $I_1 = S/V_1 = 10x10^3/240 =$ **41.67 A**

$S = I_2V_2$ or $I_2 = S/V_2 = 10^4/120 =$ **83.33 A**

www.konkur.in

Chapter 13, Solution 90.

(a) $n = V_2/V_1 = 240/2400 =$ **0.1**

(b) $n = N_2/N_1$ or $N_2 = nN_1 = 0.1(250) =$ **25 turns**

(c) $S = I_1V_1$ or $I_1 = S/V_1 = 4x10^3/2400 =$ **1.6667 A**

$S = I_2V_2$ or $I_2 = S/V_2 = 4x10^4/240 =$ **16.667 A**

www.konkur.in

Chapter 13, Solution 91.

(a) The kVA rating is $S = VI = 25{,}000 \times 75 =$ **1.875 MVA**

(b) Since $S_1 = S_2 = V_2 I_2$ and $I_2 = 1875 \times 10^3/240 =$ **7.812 kA**

www.konkur.in

Chapter 13, Solution 92.

(a) $V_2/V_1 = N_2/N_1 = n, V_2 = (N_2/N_1)V_1 = (28/1200)4800 =$ **112 V**

(b) $I_2 = V_2/R = 112/10 =$ **11.2 A** and $I_1 = nI_2$, $n = 28/1200$

$I_1 = (28/1200)11.2 =$ **261.3 mA**

(c) $p = |I_2|^2R = (11.2)^2(10) =$ **1254 watts**.

www.konkur.in

Chapter 13, Solution 93.

(a) For an input of 110 V, the primary winding must be connected in parallel, with series aiding on the secondary. The coils must be series opposing to give 14 V. Thus, the connections are shown below.

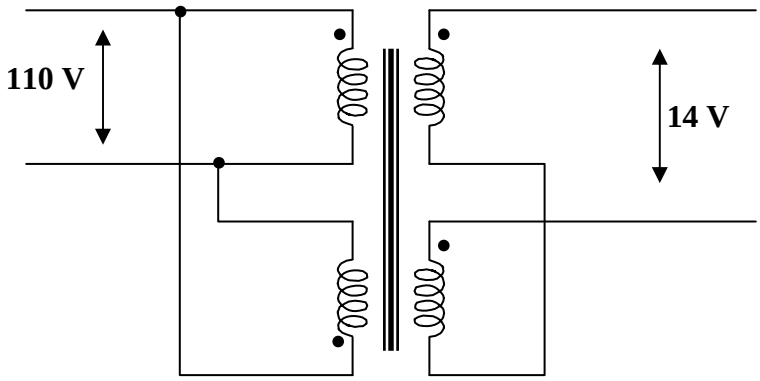

(b) To get 220 V on the primary side, the coils are connected in series, with series aiding on the secondary side. The coils must be connected series aiding to give 50 V. Thus, the connections are shown below.

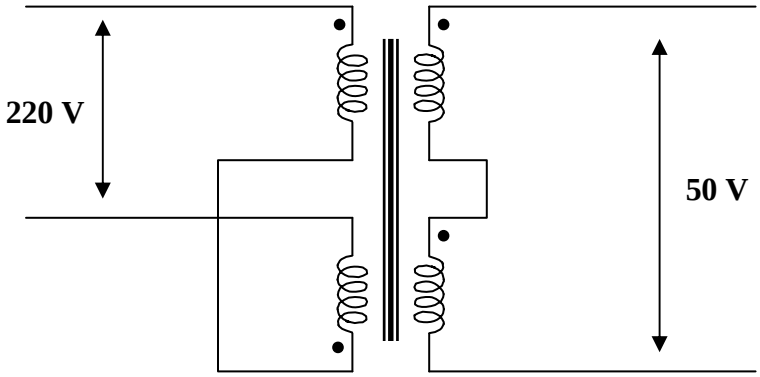

www.konkur.in

Chapter 13, Solution 94.

$V_2/V_1 = 110/440 = 1/4 = I_1/I_2$

There are four ways of hooking up the transformer as an auto-transformer. However it is clear that there are only two outcomes.

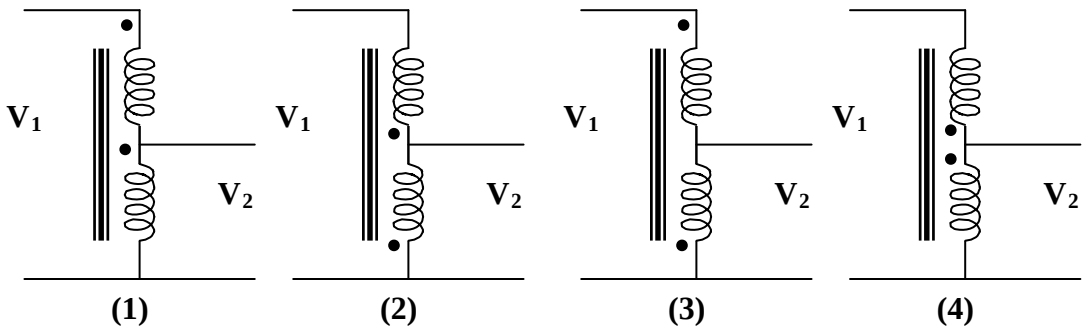

(1) and (2) produce the same results and (3) and (4) also produce the same results. Therefore, we will only consider Figure (1) and (3).

(a) For Figure (3), $V_1/V_2 = 550/V_2 = (440 - 110)/440 = 330/440$

Thus, $V_2 = 550x440/330 =$ **733.4 V (not the desired result)**

(b) For Figure (1), $V_1/V_2 = 550/V_2 = (440 + 110)/440 = 550/440$

Thus, $V_2 = 550x440/550 =$ **440 V (the desired result)**

www.konkur.in

Chapter 13, Solution 95.

(a) $n = V_s/V_p = 120/7200 =$ **1/60**

(b) $I_s = 10x120/144 = 1200/144$

$$S = V_pI_p = V_sI_s$$

$$I_p = V_sI_s/V_p = (1/60)x1200/144 = \mathbf{139\ mA}$$

www.konkur.in

***Chapter 13, Solution 96.**

Problem,

Some modern power transmission systems now have major, high voltage DC transmission segments. There are a lot of good reasons for doing this but we will not go into them here. To go from the AC to DC, power electronics are used. We start with three-phase AC and then rectify it (using a full-wave rectifier). It was found that using a delta to wye and delta combination connected secondary would give us a much smaller ripple after the full-wave rectifier. How is this accomplished? Remember that these are real devices and are wound on common cores. Hint, using Figures 13.47 and 13.49, and the fact that each coil of the wye connected secondary and each coil of the delta connected secondary are wound around the same core of each coil of the delta connected primary so the voltage of each of the corresponding coils are in phase. When the output leads of both secondaries are connected through full-wave rectifiers with the same load, you will see that the ripple is now greatly reduced. Please consult the instructor for more help if necessary.

Solution,

This is a most interesting and very practical problem. The solution is actually quite easy, you are creating a second set of sine waves to send through the full-wave rectifier, 30˚ out of phase with the first set. We will look at this graphically in a minute. We begin by showing the transformer components.

The key to making this work is to wind the secondary coils with each phase of the primary. Thus, a-b is wound around the same core as A_1-N_1 and A_2-B_2. The next thing we need to do is to make sure the voltages come out equal. We need to work the number of turns of each secondary so that the peak of $V_{A1} - V_{B1}$ is equal to $V_{A2} - V_{B2}$. Now, let us look at some of the equations involved.

If we let $v_{ab}(t) = 100\sin(t)$ V, assume that we have an ideal transformer, and the turns ratios are such that we get $v_{A1\text{-}N1}(t) = 57.74\sin(t)$ V and $V_{A2\text{-}B2}(t) = 100\sin(t)$ V. Next, let us look at $V_{bc}(t) = 100\sin(t+120^\circ)$ V. This leads to $V_{B1\text{-}N1}(t) = 57.74\sin(t+120^\circ)$ V. We now need to determine $V_{A1\text{-}B1}(t)$.

$$V_{A1\text{-}B1}(t) = 57.74\sin(t) - 57.74\sin(t+120^\circ) = 100\sin(t-30^\circ) \text{ V.}$$

This then leads to the output per phase voltage being equal to $v_{out}(t) = [100\sin(t) + 100\sin(t-30^\circ)]$ V. We can do this for each phase and end up with the output being sent to the full-wave rectifier. This looks like $v_{out}(t) = [|100\sin(t)| + |100\sin(t-30^\circ)| + |\sin(t+120^\circ)|\ |100\sin(t+90^\circ)| + |100\sin(t-120^\circ)| + |100\sin(t-150^\circ)|]$ V. The end result will be more obvious if we look at plots of the rectified output.

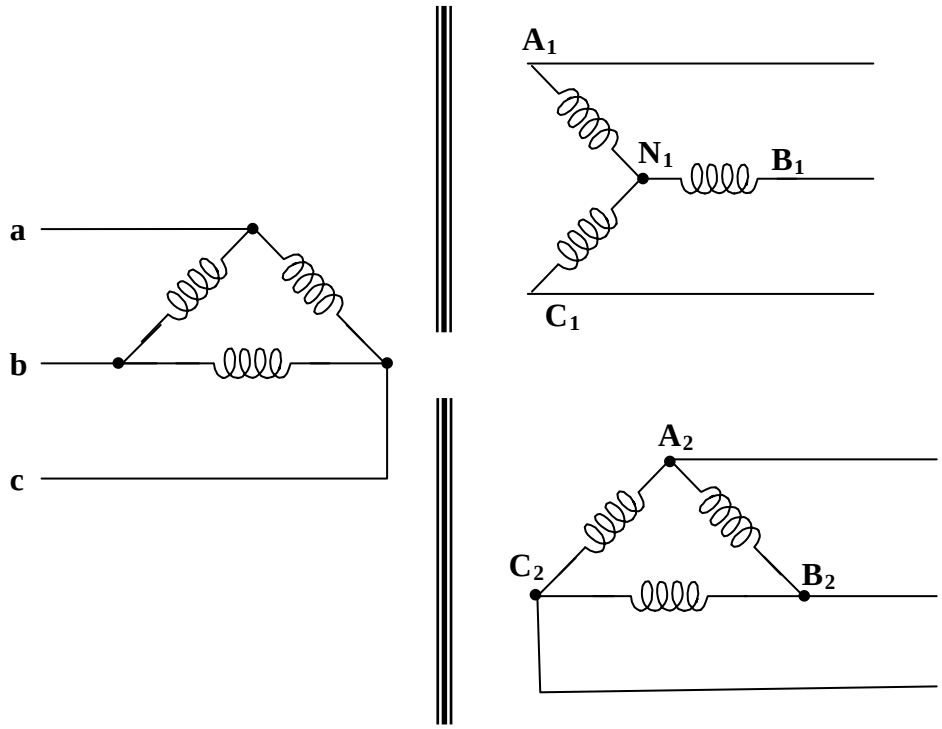

In the plot below we see the normalized (1 corresponds to 100 volts) ripple with only one of the secondary sets of windings and then the plot with both. Clearly the ripple is greatly reduced!

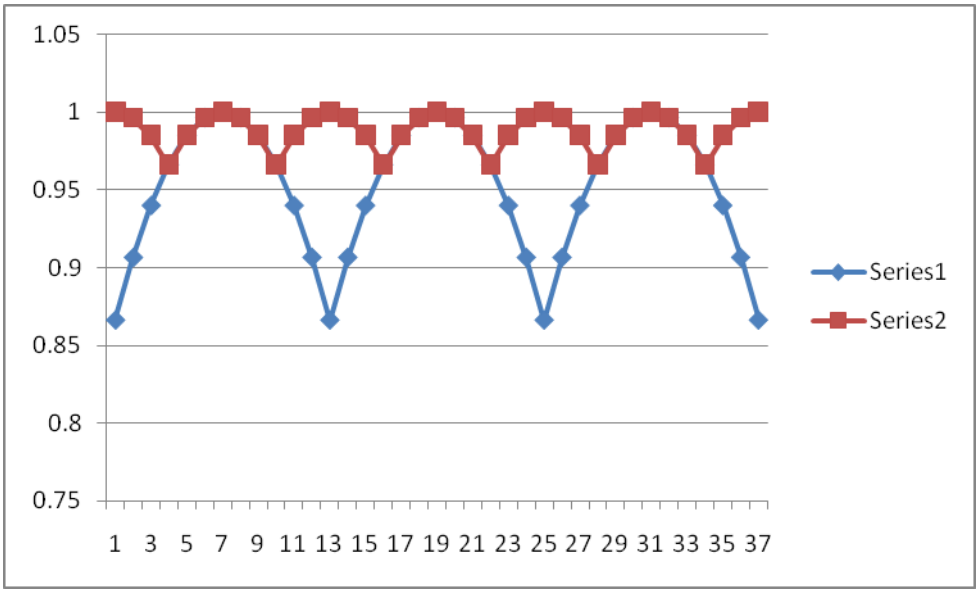

www.konkur.in

Chapter 14, Solution 1.

$$\mathbf{H}(\omega) = \frac{\mathbf{V}_o}{\mathbf{V}_i} = \frac{R}{R + 1/j\omega C} = \frac{j\omega RC}{1 + j\omega RC}$$

$$\mathbf{H}(\omega) = \frac{\mathbf{j\omega/\omega_0}}{\mathbf{1 + j\omega/\omega_0}}, \qquad \text{where } \boldsymbol{\omega_0 = \frac{1}{RC}}$$

$$H = \left|\mathbf{H}(\omega)\right| = \frac{\omega/\omega_0}{\sqrt{1 + (\omega/\omega_0)^2}} \qquad \phi = \angle\mathbf{H}(\omega) = \frac{\pi}{2} - \tan^{-1}\left(\frac{\omega}{\omega_0}\right)$$

This is a highpass filter. The frequency response is the same as that for P.P.14.1 except that $\omega_0 = 1/RC$. Thus, the sketches of H and ϕ are shown below.

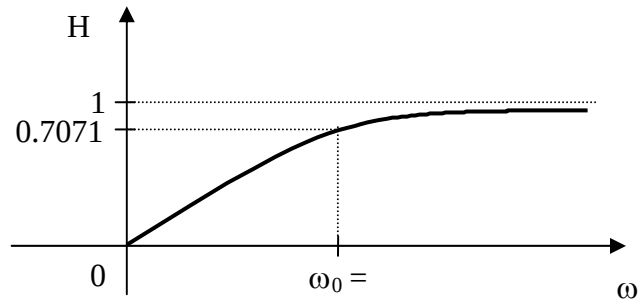

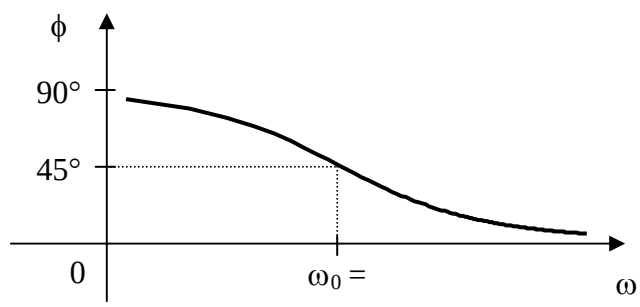

www.konkur.in

Chapter 14, Solution 2.

Using Fig. 14.69, design a problem to help other students to better understand how to determine transfer functions.

Although there are many ways to solve this problem, this is an example based on the same kind of problem asked in the third edition.

Problem

Obtain the transfer function $\mathbf{V}_o/\mathbf{V}_i$ of the circuit in Fig. 14.66.

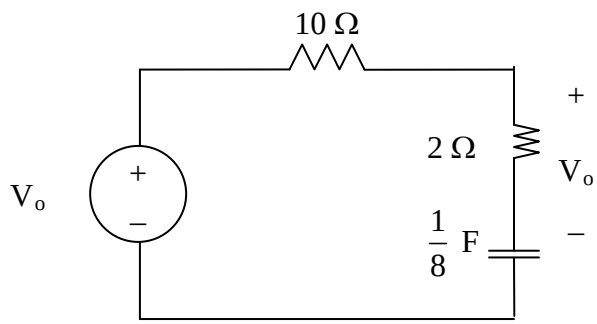

Figure 14.66 For Prob. 14.2.

Solution

$$H(s) = \frac{V_o}{V_i} = \frac{2 + \dfrac{1}{s/8}}{10 + 20 + \dfrac{1}{s/8}} = \frac{2 + 8/s}{12 + 8/s} = \frac{1}{6}\,\frac{s + 4}{s + 0.6667}$$

www.konkur.in

Chapter 14, Solution 3.

$$0.2F \longrightarrow \frac{1}{j\omega C} = \frac{1}{s(0.2)} = \frac{5}{s}$$

$$0.1F \longrightarrow \frac{1}{s(0.1)} = \frac{10}{s}$$

The circuit becomes that shown below.

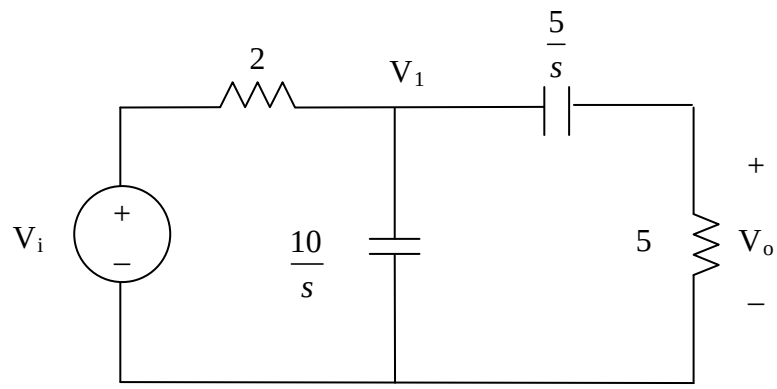

Let $Z = \frac{10}{s} // (5 + \frac{5}{s}) = \frac{\frac{10}{s}(5+\frac{5}{s})}{5+\frac{15}{s}} = \frac{\frac{10}{s}5(\frac{1+s}{s})}{\frac{5}{s}(3+s)} = \frac{10(s+1)}{s(s+3)}$

$$V_1 = \frac{Z}{Z+2}V_i$$

$$V_o = \frac{5}{5+5/s}V_1 = \frac{s}{s+1}V_1 = \frac{s}{s+1} \bullet \frac{Z}{Z+2}V_i$$

$$H(s) = V_o/V_i = \frac{s}{s+1} \bullet \frac{\frac{10(s+1)}{s(s+3)}}{2+\frac{10(s+1)}{s(s+3)}} = \frac{10s}{2s(s+3)+10(s+1)} = \frac{5s}{s^2+8s+5}$$

H(s) = **5s/(s^2+8s+5)**

www.konkur.in

Chapter 14, Solution 4.

(a) $$R \parallel \frac{1}{j\omega C} = \frac{R}{1 + j\omega RC}$$

$$\mathbf{H}(\omega) = \frac{\mathbf{V}_o}{\mathbf{V}_i} = \frac{\dfrac{R}{1 + j\omega RC}}{j\omega L + \dfrac{R}{1 + j\omega RC}} = \frac{R}{R + j\omega L(1 + j\omega RC)}$$

$$\mathbf{H}(\omega) = \frac{\mathbf{R}}{\mathbf{-\omega^2 RLC + R + j\omega L}}$$

(b) $$\mathbf{H}(\omega) = \frac{R + j\omega L}{R + j\omega L + 1/j\omega C} = \frac{j\omega C(R + j\omega L)}{1 + j\omega C(R + j\omega L)}$$

$$\mathbf{H}(\omega) = \frac{\mathbf{-\omega^2 LC + j\omega RC}}{\mathbf{1 - \omega^2 LC + j\omega RC}}$$

www.konkur.in

Chapter 14, Solution 5.

(a) Let $Z = R // sL = \dfrac{sRL}{R + sL}$

$$V_o = \frac{Z}{Z + R_s} V_s$$

$$H(s) = \frac{V_o}{V_s} = \frac{Z}{Z + R_s} = \frac{\dfrac{sRL}{R + sL}}{R_s + \dfrac{sRL}{R + sL}} = \underline{\frac{sRL}{RR_s + s(R + R_s)L}}$$

(b) Let $Z = R // \dfrac{1}{sC} = \dfrac{Rx\dfrac{1}{sC}}{R + \dfrac{1}{sC}} = \dfrac{R}{1 + sRC}$

$$V_o = \frac{Z}{Z + sL} V_s$$

$$\mathrm{H(s)} = \frac{\mathrm{V_o}}{\mathrm{V_i}} = \frac{\mathrm{Z}}{\mathrm{Z + sL}} = \frac{\dfrac{\mathrm{R}}{\mathrm{1 + sRC}}}{\mathrm{sL} + \dfrac{\mathrm{R}}{\mathrm{1 + sRC}}} = \frac{\mathrm{R}}{\mathrm{s^2 LRC + sL + R}}$$

www.konkur.in

Chapter 14, Solution 6.

The 2 H inductors become jω2 or 2s.

Let **Z** = 2s||2 = [(2s)(2)/(2s+2)] = 2s/(s+1)

We convert the current source to a voltage source as shown below.

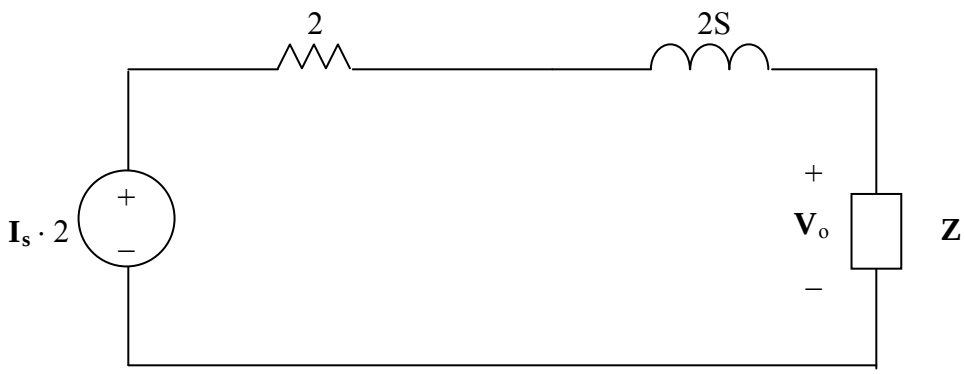

$$\mathbf{V}_o = [(Z)/(Z+2s+2)](2I_s) = \frac{\frac{2s}{s+1}}{\frac{2s+2s^2+2s+2s+2}{s+1}}(2I_s) = \frac{2s}{s^2+3s+1}I_s$$ or

$$H(s) = I_o/I_s = \mathbf{[2s/(s^2+3s+1)]}.$$

www.konkur.in

Chapter 14, Solution 7.

(a) $0.05 = 20\log_{10} H$

$2.5\times10^{-3} = \log_{10} H$

$H = 10^{2.5\times10^{-3}} = \mathbf{1.005773}$

(b) $-6.2 = 20\log_{10} H$

$-0.31 = \log_{10} H$

$H = 10^{-0.31} = \mathbf{0.4898}$

(c) $104.7 = 20\log_{10} H$

$5.235 = \log_{10} H$

$H = 10^{5.235} = \mathbf{1.718\times10^{5}}$

www.konkur.in

Chapter 14, Solution 8.

Design a problem to help other students to better calculate the magnitude in dB and phase in degrees of a variety of transfer functions at a single value of ω.

Although there are many ways to solve this problem, this is an example based on the same kind of problem asked in the third edition.

Problem

Determine the magnitude (in dB) and the phase (in degrees) of **H**(ω) at $\omega = 1$ if **H**(ω) equals

(a) 0.05
(b) 125
(c) $\dfrac{10j\omega}{2+j\omega}$
(d) $\dfrac{3}{1+j\omega}+\dfrac{6}{2+j\omega}$

Solution

(a) $H = 0.05$
$H_{dB} = 20\log_{10} 0.05 =$ **- 26.02** , $\varphi =$ **0°**

(b) $H = 125$
$H_{dB} = 20\log_{10} 125 =$ **41.94** , $\varphi =$ **0°**

(c) $H(1) = \dfrac{j10}{2+j} = 4.472\angle 63.43°$
$H_{dB} = 20\log_{10} 4.472 =$ **13.01** , $\varphi =$ **63.43°**

(d) $H(1) = \dfrac{3}{1+j}+\dfrac{6}{2+j} = 3.9 - j2.7 = 4.743\angle -34.7°$
$H_{dB} = 20\log_{10} 4.743 =$ **13.521**, $\varphi =$ **–34.7°**

www.konkur.in

Chapter 14, Solution 9.

$$\mathbf{H}(\omega) = \frac{10}{10(1+j\omega)(1+j\omega/10)}$$

$$H_{dB} = 20\log_{10}|1| - 20\log_{10}|1+j\omega| - 20\log_{10}|1+j\omega/10|$$

$$\phi = -\tan^{-1}(\omega) - \tan^{-1}(\omega/10)$$

<u>The magnitude and phase plots are shown below</u>.

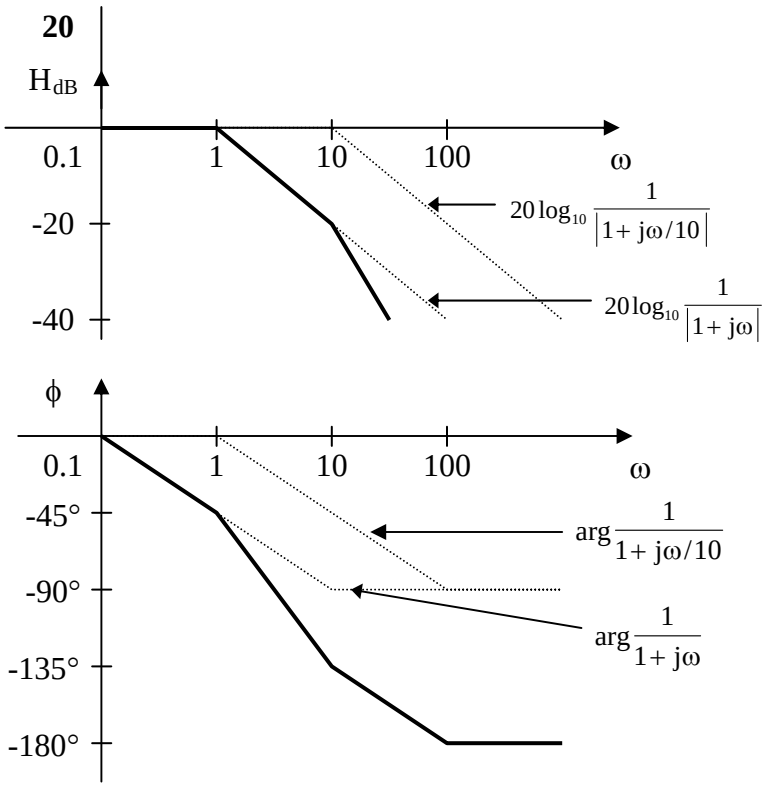

www.konkur.in

Chapter 14, Solution 10.

Design a problem to help other students to better understand how to determine the Bode magnitude and phase plots of a given transfer function in terms of jω.

Although there are many ways to solve this problem, this is an example based on the same kind of problem asked in the third edition.

Problem

Sketch the Bode magnitude and phase plots of:

$$H(j\omega) = \frac{50}{j\omega(5 + j\omega)}$$

Solution

$$H(j\omega) = \frac{50}{j\omega(5 + j\omega)} = \frac{10}{1j\omega\left(1 + \frac{j\omega}{5}\right)}$$

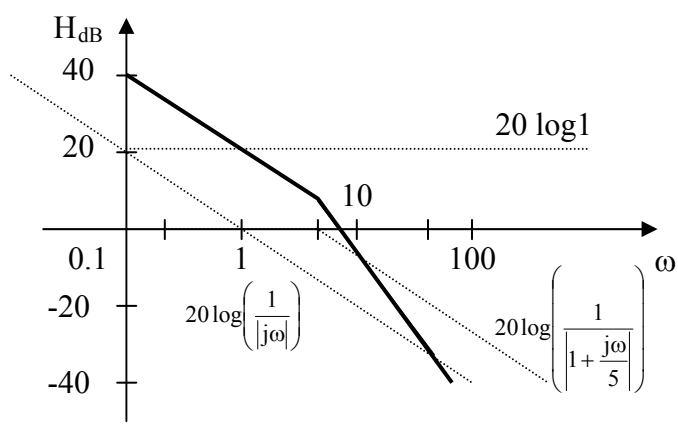

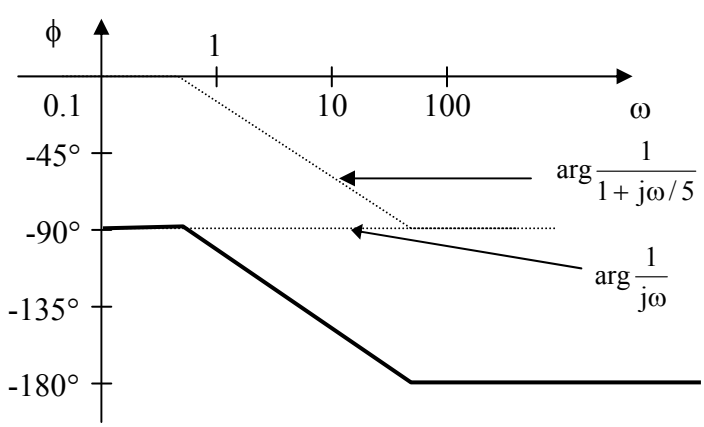

www.konkur.in

Chapter 14, Solution 11.

$$\mathbf{H}(\omega) = \frac{0.2x10(1 + j\omega/10)}{2[j\omega(1 + j\omega/2)]}$$

$$H_{dB} = 20\log_{10} 1 + 20\log_{10}|1 + j\omega/10| - 20\log_{10}|j\omega| - 20\log_{10}|1 + j\omega/2|$$

$$\phi = -90° + \tan^{-1}\omega/10 - \tan^{-1}\omega/2$$

The magnitude and phase plots are shown below.

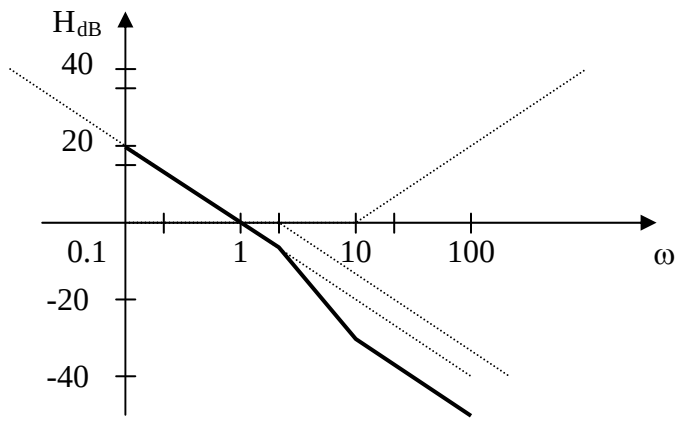

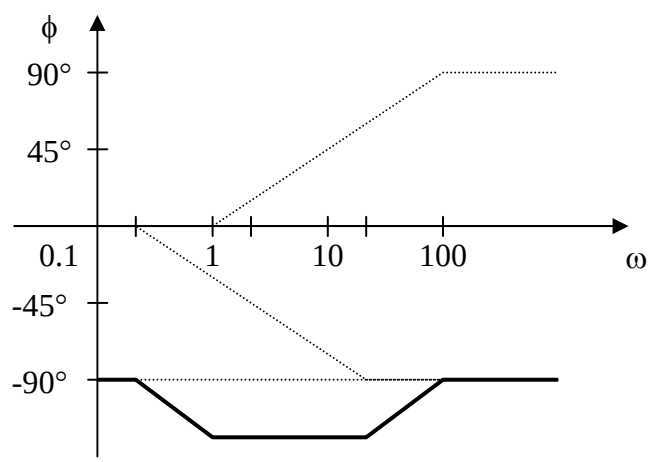

www.konkur.in

Chapter 14, Solution 12.

$$T(\omega) = \frac{10(1+j\omega)}{j\omega(1+j\omega/10)}$$

To sketch this we need $20\log_{10}|T(\omega)| = 20\log_{10}|10| + 20\log_{10}|1+j\omega| - 20\log_{10}|j\omega| - 20\log_{10}|1+j\omega/10|$ and the phase is equal to $\tan^{-1}(\omega) - 90° - \tan^{-1}(\omega/10)$.

The plots are shown below.

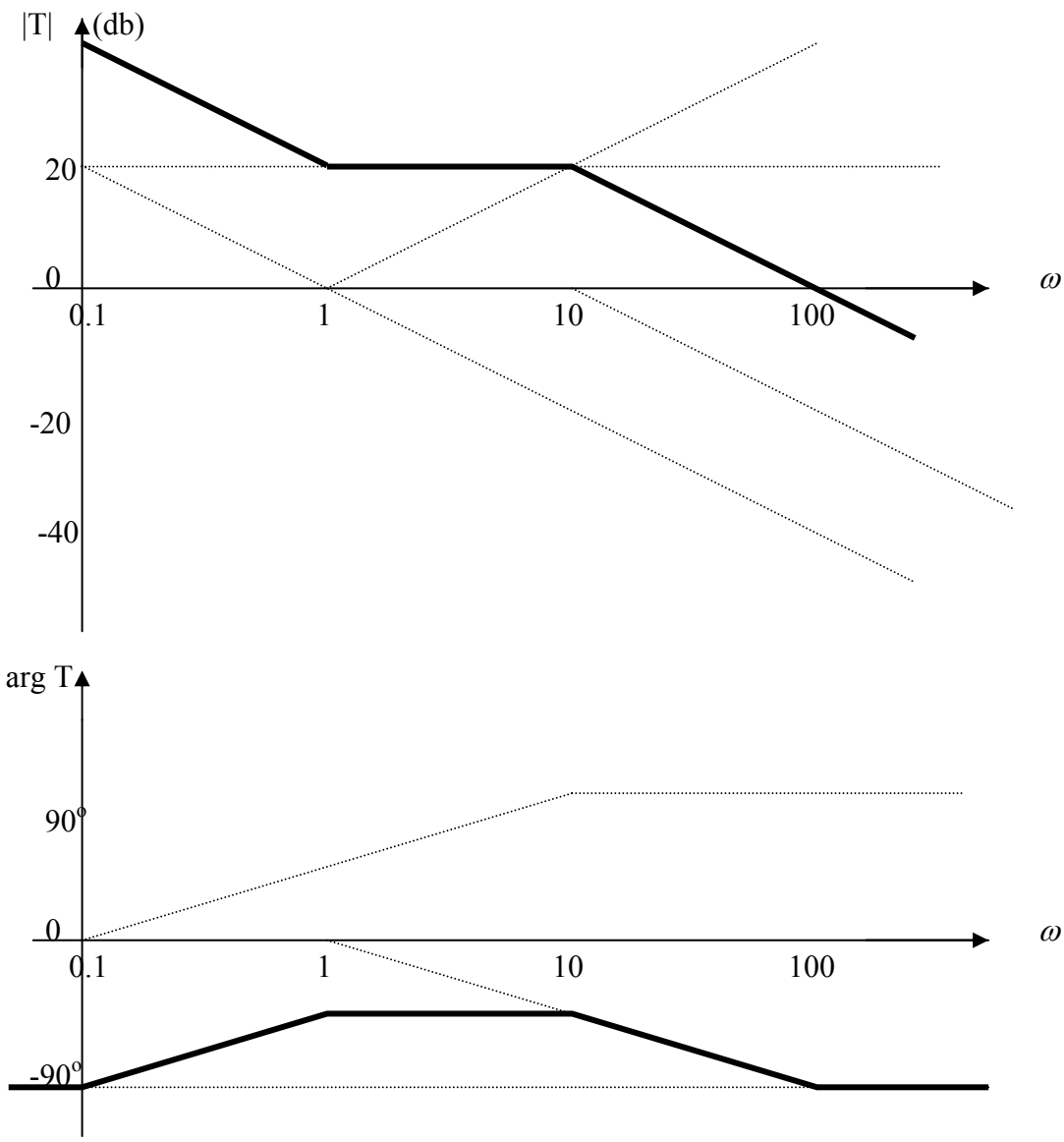

www.konkur.in

Chapter 14, Solution 13.

$$\mathbf{G}(\omega) = \frac{0.1(1+j\omega)}{(j\omega)^2(10+j\omega)} = \frac{(1/100)(1+j\omega)}{(j\omega)^2(1+j\omega/10)}$$

$$G_{dB} = -40 + 20\log_{10}|1+j\omega| - 40\log_{10}|j\omega| - 20\log_{10}|1+j\omega/10|$$

$$\phi = -180° + \tan^{-1}\omega - \tan^{-1}\omega/10$$

The magnitude and phase plots are shown below.

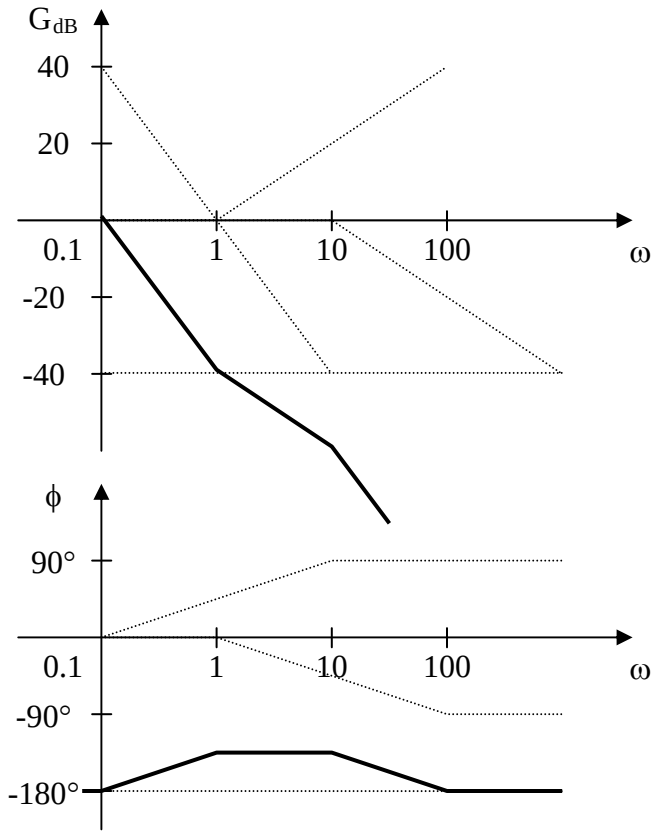

www.konkur.in

Chapter 14, Solution 14.

$$\mathbf{H}(\omega) = \frac{250}{25}\frac{1+j\omega}{j\omega\left(1+\frac{j\omega 10}{25}+\left(\frac{j\omega}{5}\right)^2\right)}$$

$$H_{dB} = 20\log_{10}10 + 20\log_{10}|1+j\omega| - 20\log_{10}|j\omega|$$

$$-20\log_{10}|1+j\omega 2/5+(j\omega/5)^2|$$

$$\phi = -90° + \tan^{-1}\omega - \tan^{-1}\left(\frac{\omega 10/25}{1-\omega^2/5}\right)$$

The magnitude and phase plots are shown below.

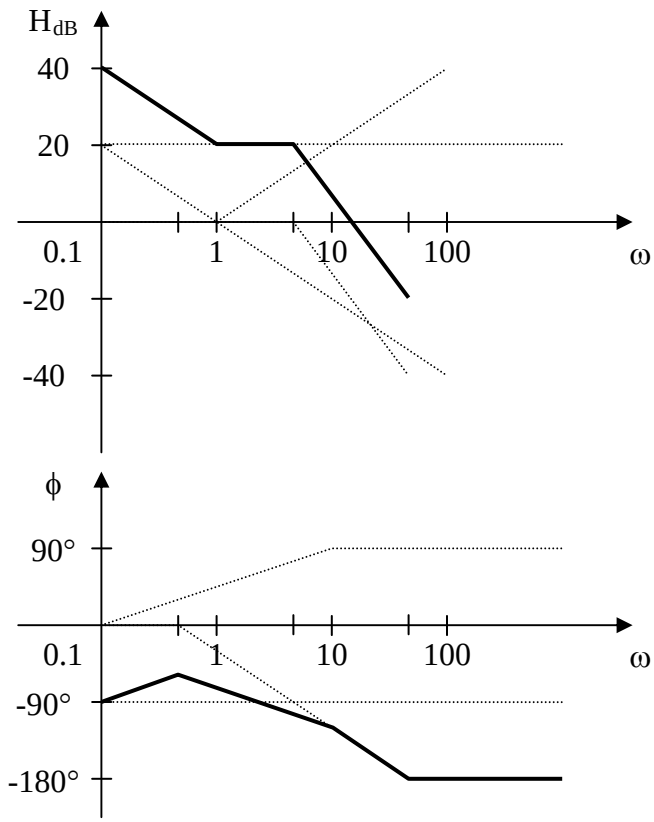

www.konkur.in

Chapter 14, Solution 15.

$$\mathbf{H}(\omega) = \frac{2(1+j\omega)}{(2+j\omega)(10+j\omega)} = \frac{0.1(1+j\omega)}{(1+j\omega/2)(1+j\omega/10)}$$

$$H_{dB} = 20\log_{10} 0.1 + 20\log_{10}|1+j\omega| - 20\log_{10}|1+j\omega/2| - 20\log_{10}|1+j\omega/10|$$

$$\phi = \tan^{-1}\omega - \tan^{-1}\omega/2 - \tan^{-1}\omega/10$$

The magnitude and phase plots are shown below.

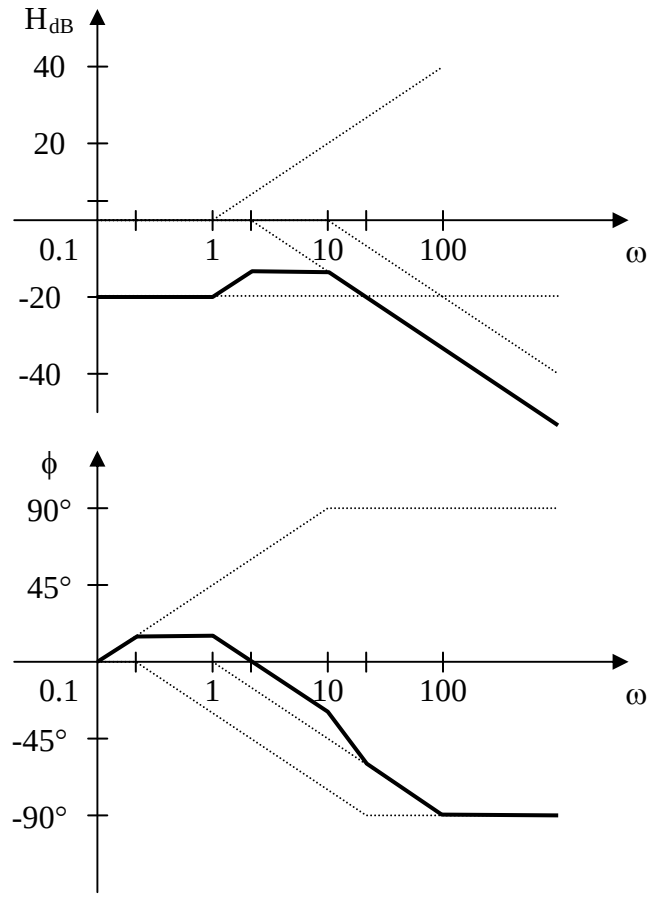

www.konkur.in

Chapter 14, Solution 16.

$$H(\omega) = \frac{\frac{1.6}{16}}{j\omega\left[1 + j\omega + \left(\frac{j\omega}{4}\right)^2\right]} = \frac{0.1}{j\omega\left[1 + j\omega + \left(\frac{j\omega}{4}\right)^2\right]}$$

$$H_{db} = 20\log_{10}|0.1| - 20\text{olg}_{10}|j\omega| - 20\log_{10}|1+j\omega+(j\omega/4)^2|$$

The magnitude and phase plots are shown below.

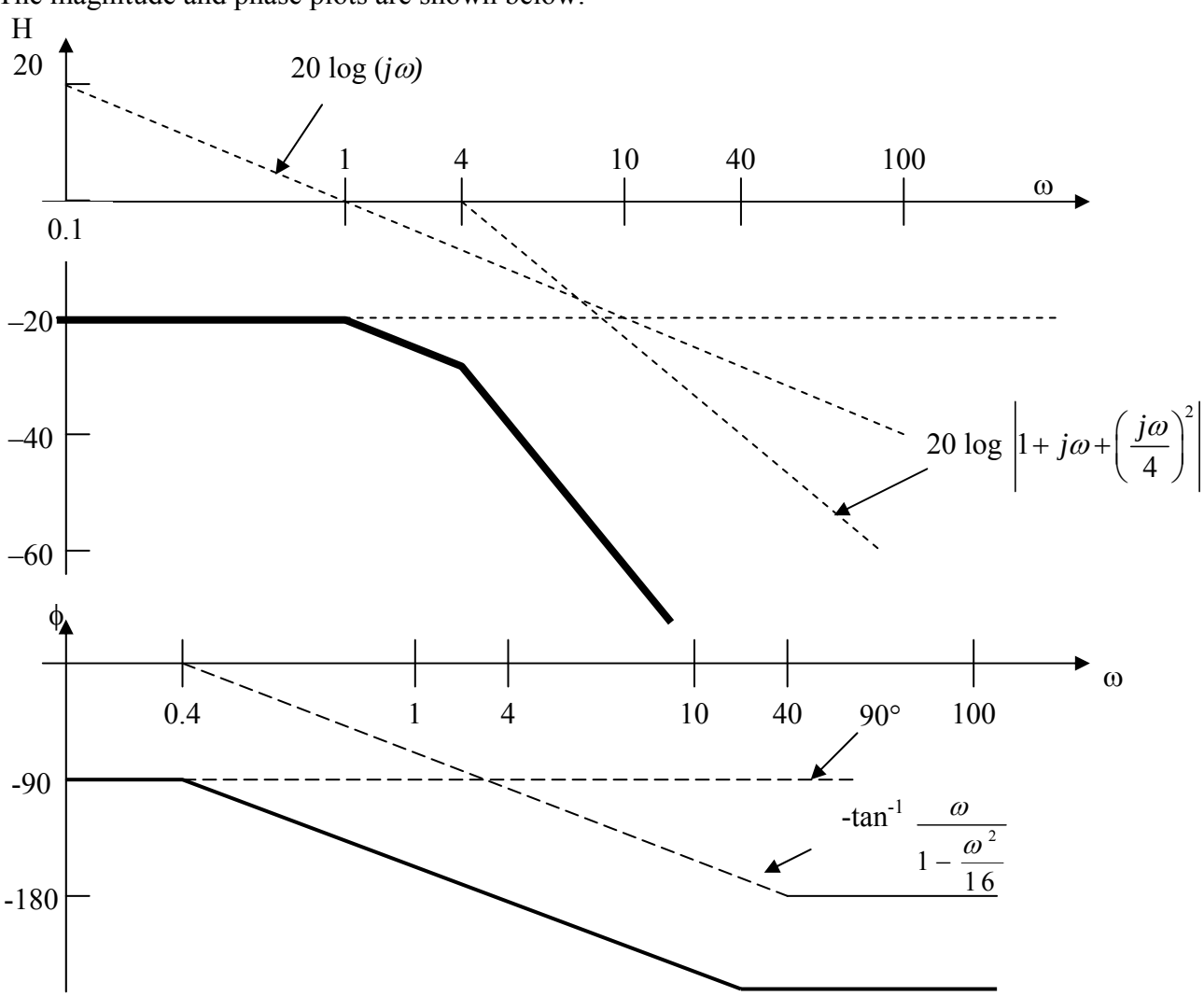

www.konkur.in

Chapter 14, Solution 17.

$$\mathbf{G}(\omega) = \frac{(1/4)\, j\omega}{(1+j\omega)(1+j\omega/2)^2}$$

$$G_{dB} = -20\log_{10} 4 + 20\log_{10}|j\omega| - 20\log_{10}|1+j\omega| - 40\log_{10}|1+j\omega/2|$$

$$\phi = -90° - \tan^{-1}\omega - 2\tan^{-1}\omega/2$$

The magnitude and phase plots are shown below.

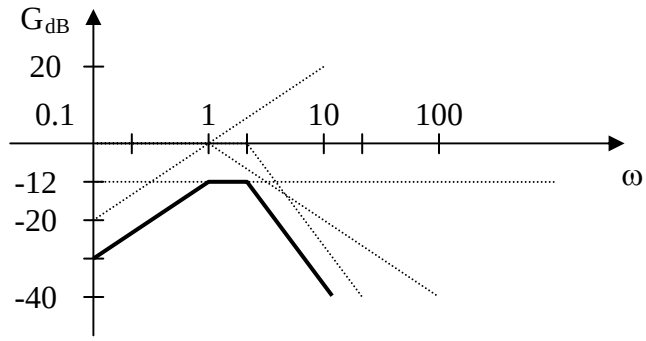

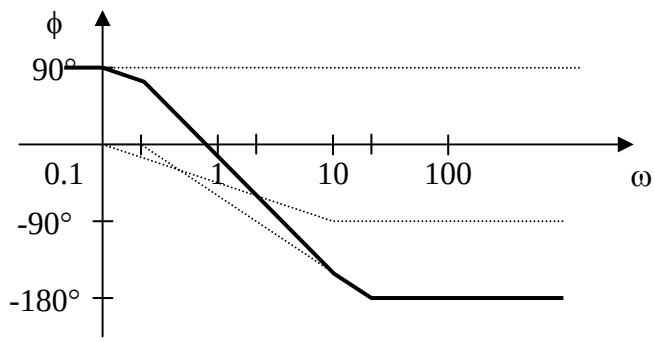

www.konkur.in

Chapter 14, Solution 18.

The MATLAB code is shown below.

```
>> w=logspace(-1,1,200);
>> s=i*w;
>> h=(7*s.^2+s+4)./(s.^3+8*s.^2+14*s+5);
>> Phase=unwrap(angle(h))*57.23;
>> semilogx(w,Phase)
>> grid on
```

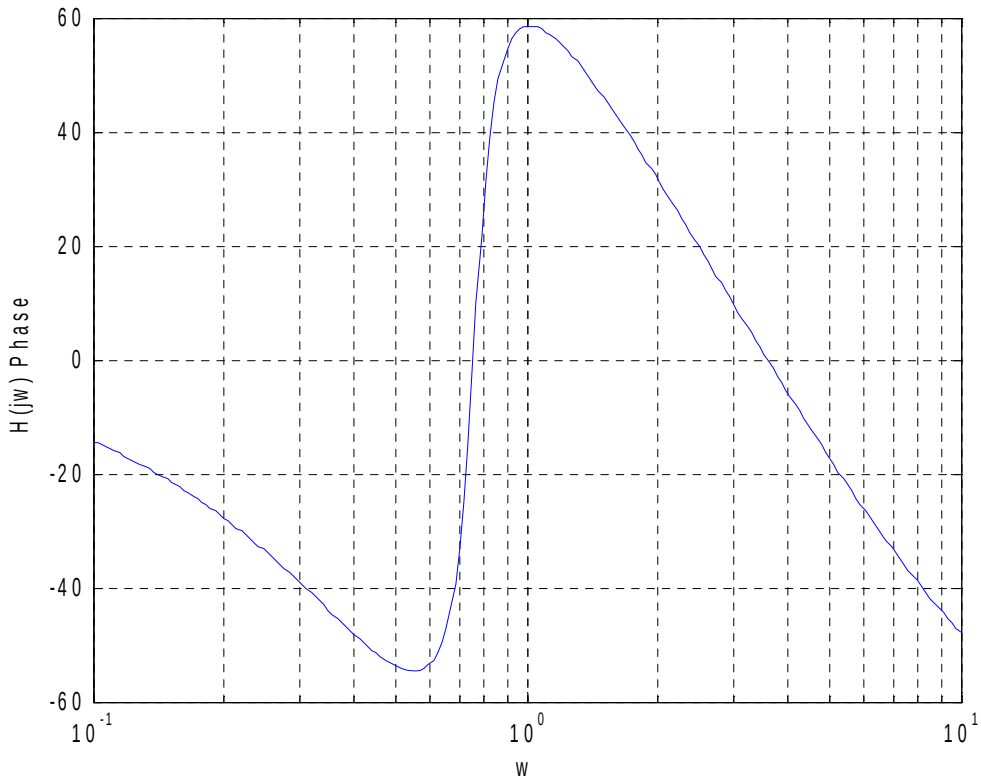

Now for the magnitude, we need to add the following to the above,

```
>> H=abs(h);
>> HdB=20*log10(H);
>> semilogx(w,HdB);
>> grid on
```

www.konkur.in

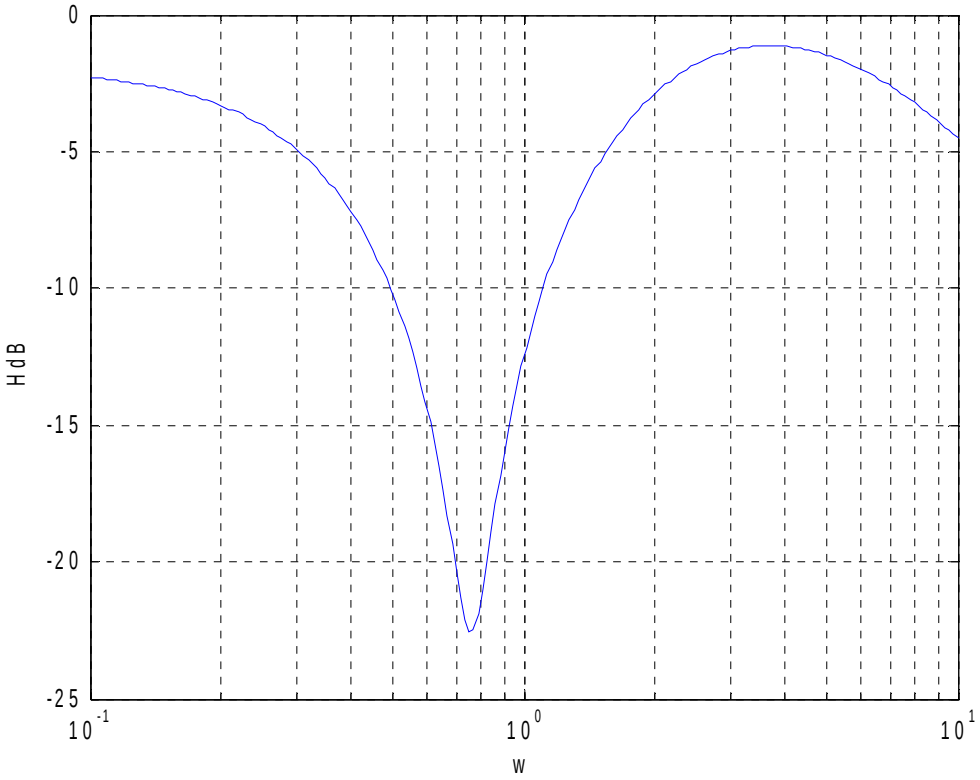

www.konkur.in

Chapter 14, Solution 19.

$H(\omega) = 80j\omega/[(10+j\omega)(20+j\omega)(40+j\omega)]$

$= [80/(10x20x40)](j\omega)/[(1+j\omega/10)(1+j\omega/20)(1+j\omega/40)]$

$H_{db} = 20\log_{10}|0.01| + 20\log_{10}|j\omega| - 20\log_{10}|1+j\omega/10| - 20\log_{10}|1+j\omega/20| - 20\log_{10}|1+j\omega/40|$

The magnitude and phase plots are shown below.

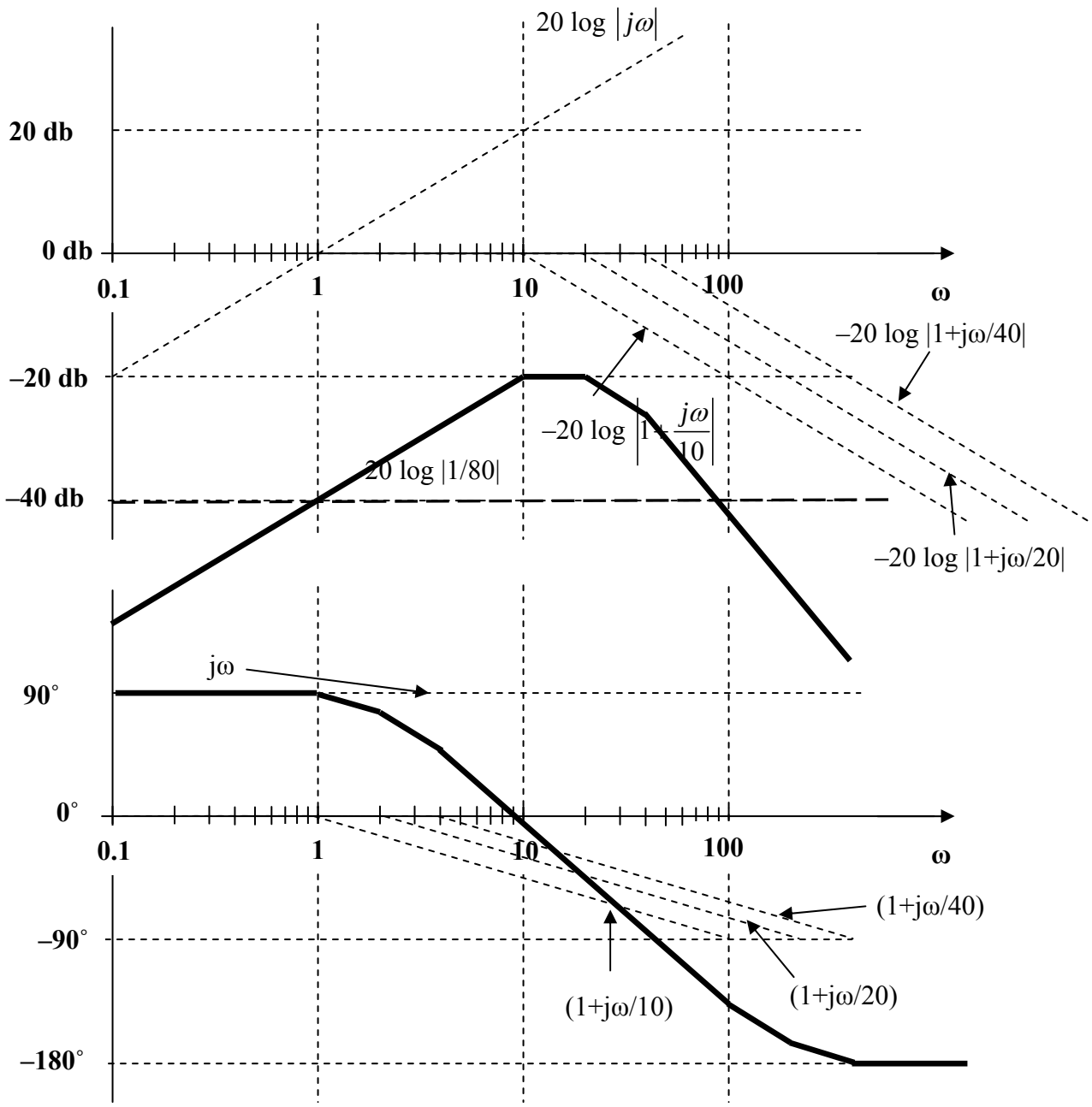

www.konkur.in

Chapter 14, Solution 20.

Design a more complex problem than given in Prob. 14.10, to help other students to better understand how to determine the Bode magnitude and phase plots of a given transfer function in terms of jω. Include at least a second order repeated root.

Although there are many ways to solve this problem, this is an example based on the same kind of problem asked in the third edition.

Problem

Sketch the magnitude phase Bode plot for the transfer function

$$H(\omega) = \frac{25j\omega}{(j\omega+1)(j\omega+5)^2(j\omega+10)}$$

Solution

$$H(\omega) = \frac{\left(\frac{1}{100}\right)j\omega}{(1+j\omega)\left(1+\frac{j\omega}{5}\right)^2\left(1+\frac{j\omega}{10}\right)}$$

20log(1/100) = -40

For the plots, see the next page.

www.konkur.in

The magnitude and phase plots are shown below.

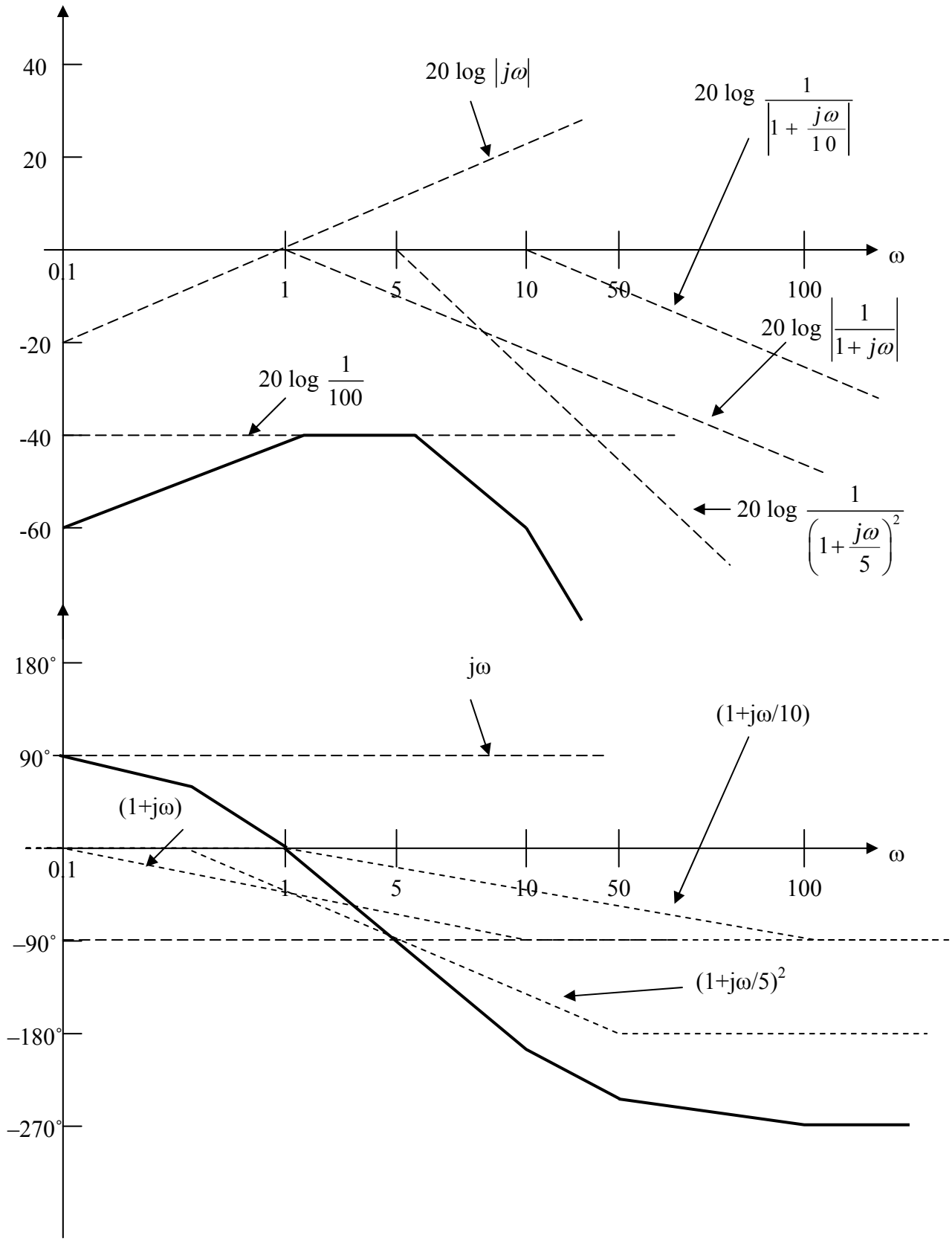

www.konkur.in

Chapter 14, Solution 21.

$H(\omega) = 10(j\omega)(20+j\omega)/[(1+j\omega)(400+60j\omega-\omega^2)]$

$= [10x20/400](j\omega)(1+j\omega/20)/[(1+j\omega)(1+(3j\omega/20)+(j\omega/20)^2)]$

$$H_{dB} = 20\log(0.5) + 20\log|j\omega| + 20\log\left|1+\frac{j\omega}{20}\right| - 20\log|1+j\omega| - 20\log\left|1+\frac{j3\omega}{20}+\left(\frac{j\omega}{20}\right)^2\right|$$

The magnitude plot is as sketched below. $20\log_{10}|0.5| = -6$ db

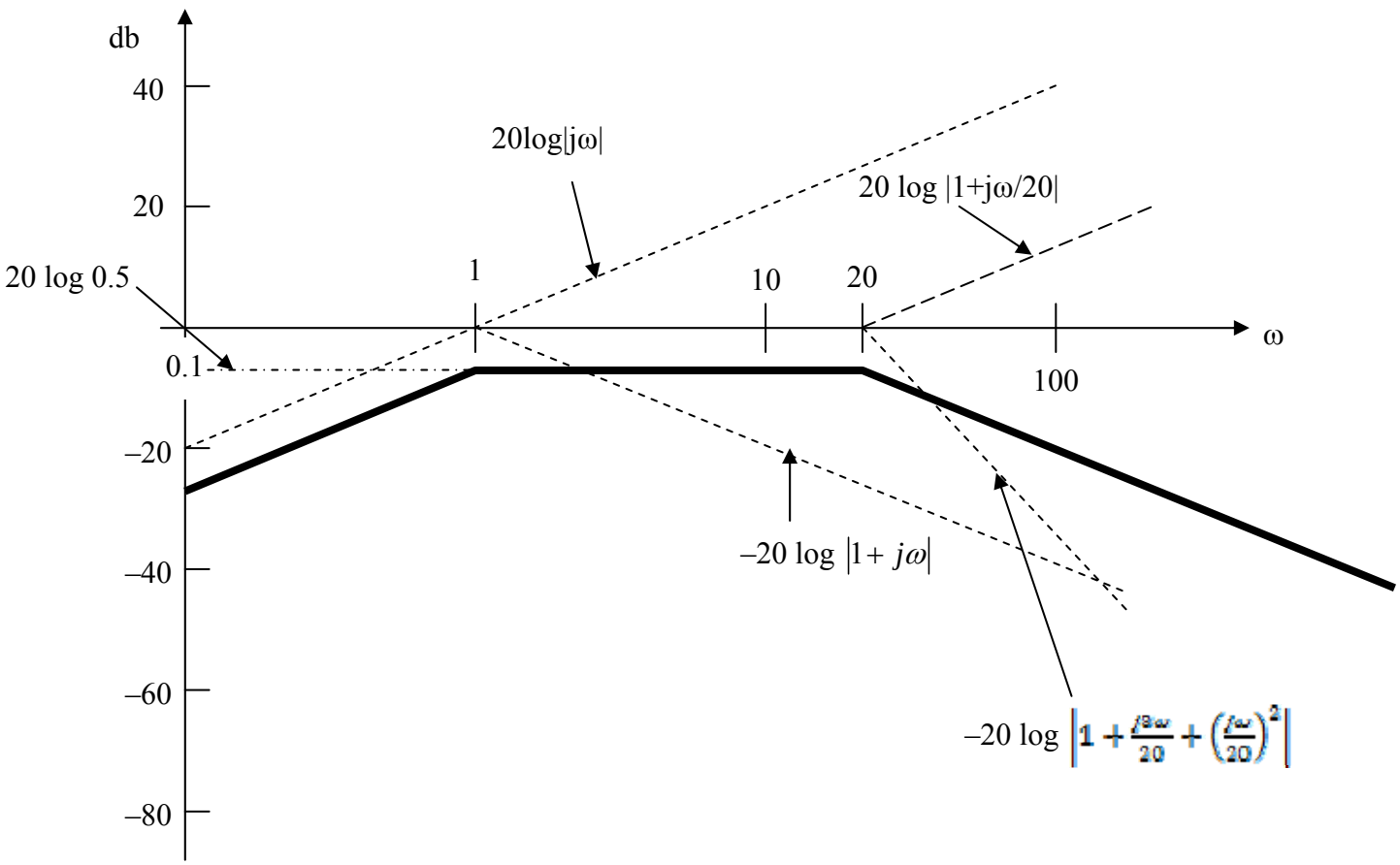

www.konkur.in

Chapter 14, Solution 22.

$$20 = 20\log_{10} k \longrightarrow k = 10$$

A zero of slope $+20$ dB/dec at $\omega = 2 \longrightarrow 1 + j\omega/2$

A pole of slope -20 dB/dec at $\omega = 20 \longrightarrow \dfrac{1}{1 + j\omega/20}$

A pole of slope -20 dB/dec at $\omega = 100 \longrightarrow \dfrac{1}{1 + j\omega/100}$

Hence,

$$\mathbf{H}(\omega) = \frac{10(1 + j\omega/2)}{(1 + j\omega/20)(1 + j\omega/100)}$$

$$\mathbf{H}(\omega) = \frac{\mathbf{10^4\,(2 + j\omega)}}{\mathbf{(20 + j\omega)(100 + j\omega)}}$$

www.konkur.in

Chapter 14, Solution 23.

A zero of slope $+20\ \text{dB/dec}$ at the origin $\longrightarrow$ $j\omega$

A pole of slope $-20\ \text{dB/dec}$ at $\omega = 1$ $\longrightarrow$ $\dfrac{1}{1 + j\omega/1}$

A pole of slope $-40\ \text{dB/dec}$ at $\omega = 10$ $\longrightarrow$ $\dfrac{1}{(1 + j\omega/10)^2}$

Hence,

$$\mathbf{H}(\omega) = \frac{j\omega}{(1 + j\omega)(1 + j\omega/10)^2}$$

$$\mathbf{H}(\omega) = \frac{\mathbf{100\ j\omega}}{\mathbf{(1 + j\omega)(10 + j\omega)^2}}$$

(It should be noted that this function could also have a minus sign out in front and still be correct. The magnitude plot does not contain this information. It can only be obtained from the phase plot.)

www.konkur.in

Chapter 14, Solution 24.

$$40 = 20\log_{10} K \quad \longrightarrow \quad K = 100$$

There is a pole at ω=50 giving 1/(1+jω/50)
There is a zero at ω=500 giving (1 + jω/500).
There is another pole at ω=2122 giving 1/(1 + jω/2122).
Thus,

$$H(j\omega) = 100(1+j\omega)/[(1+j\omega/50)(1+j\omega/2122)]$$

$$= [100(50x2122)/500](j\omega+500)/[(j\omega+50)(j\omega+2122)]$$

or

$$H(s) = \mathbf{21220(s+500)/[(s+50)(s+2122)]}.$$

www.konkur.in

Chapter 14, Solution 25.

$$\omega_0 = \frac{1}{\sqrt{LC}} = \frac{1}{\sqrt{(40\times10^{-3})(1\times10^{-6})}} = 5 \text{ krad/s}$$

$$\mathbf{Z}(\omega_0) = R = \mathbf{2\ k\Omega}$$

$$\mathbf{Z}(\omega_0/4) = R + j\left(\frac{\omega_0}{4}L - \frac{4}{\omega_0 C}\right)$$

$$\mathbf{Z}(\omega_0/4) = 2000 + j\left(\frac{5\times10^3}{4}\cdot 40\times10^{-3} - \frac{4}{(5\times10^3)(1\times10^{-6})}\right)$$

$$\mathbf{Z}(\omega_0/4) = 2000 + j(50 - 4000/5)$$

$$\mathbf{Z}(\omega_0/4) = \mathbf{2 - j0.75\ k\Omega}$$

$$\mathbf{Z}(\omega_0/2) = R + j\left(\frac{\omega_0}{2}L - \frac{2}{\omega_0 C}\right)$$

$$\mathbf{Z}(\omega_0/2) = 2000 + j\left(\frac{(5\times10^3)}{2}(40\times10^{-3}) - \frac{2}{(5\times10^3)(1\times10^{-6})}\right)$$

$$\mathbf{Z}(\omega_0/2) = 200+j(100-2000/5)$$

$$\mathbf{Z}(\omega_0/2) = \mathbf{2 - j0.3\ k\Omega}$$

$$\mathbf{Z}(2\omega_0) = R + j\left(2\omega_0 L - \frac{1}{2\omega_0 C}\right)$$

$$\mathbf{Z}(2\omega_0) = 2000 + j\left((2)(5\times10^3)(40\times10^{-3}) - \frac{1}{(2)(5\times10^3)(1\times10^{-6})}\right)$$

$$\mathbf{Z}(2\omega_0) = \mathbf{2 + j0.3\ k\Omega}$$

$$\mathbf{Z}(4\omega_0) = R + j\left(4\omega_0 L - \frac{1}{4\omega_0 C}\right)$$

$$\mathbf{Z}(4\omega_0) = 2000 + j\left((4)(5\times10^3)(40\times10^{-3}) - \frac{1}{(4)(5\times10^3)(1\times10^{-6})}\right)$$

$$\mathbf{Z}(4\omega_0) = \mathbf{2 + j0.75\ k\Omega}$$

www.konkur.in

Chapter 14, Solution 26.

Design a problem to help other students to better understand ω_o, Q, and B at resonance in series *RLC* circuits.

Although there are many ways to solve this problem, this is an example based on the same kind of problem asked in the third edition.

Problem

A coil with resistance 3 Ω and inductance 100 mH is connected in series with a capacitor of 50 pF, a resistor of 6 Ω, and a signal generator that gives 110V-rms at all frequencies. Calculate ω_o, Q, and B at resonance of the resultant series RLC circuit.

Solution

Consider the circuit as shown below. This is a series RLC resonant circuit.

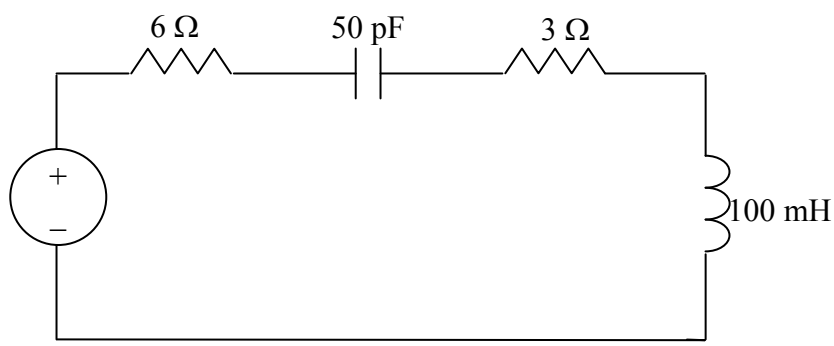

R = 6 + 3 = 9 Ω

$$\omega_o = \frac{1}{\sqrt{LC}} = \frac{1}{\sqrt{100x10^{-3}\,x50x10^{-12}}} = \underline{447.21 \text{ krad/s}}$$

$$Q = \frac{\omega_o L}{R} = \frac{447.21x10^3\,x100x10^3}{9} = \underline{4969}$$

$$B = \frac{\omega_o}{Q} = \frac{447.21x10^3}{4969} = \underline{90 \text{ rad/s}}$$

www.konkur.in

Chapter 14, Solution 27.

$$\omega_o = \frac{1}{\sqrt{LC}} = 40 \quad \longrightarrow \quad LC = \frac{1}{40^2}$$

$$B = \frac{R}{L} = 10 \quad \longrightarrow \quad R = 10L$$

If we select R =**1 Ω**, then L = R/10 = **100 mH** and

$$C = \frac{1}{40^2 L} = \frac{1}{40^2 x 0.1} = \underline{6.25 \text{ mF}}$$

www.konkur.in

Chapter 14, Solution 28.

$R = 10\,\Omega$.

$$L = \frac{R}{B} = \frac{10}{20} = 0.5\text{ H}$$

$$C = \frac{1}{\omega_0^2 L} = \frac{1}{(1000)^2(0.5)} = 2\ \mu\text{F}$$

$$Q = \frac{\omega_0}{B} = \frac{1000}{20} = 50$$

Therefore, if $R = 10\,\Omega$ then

$L =$ **500 mH**, $C =$ **2 μF**, $Q =$ **50**

www.konkur.in

Chapter 14, Solution 29.

We convert the voltage source to a current source as shown below.

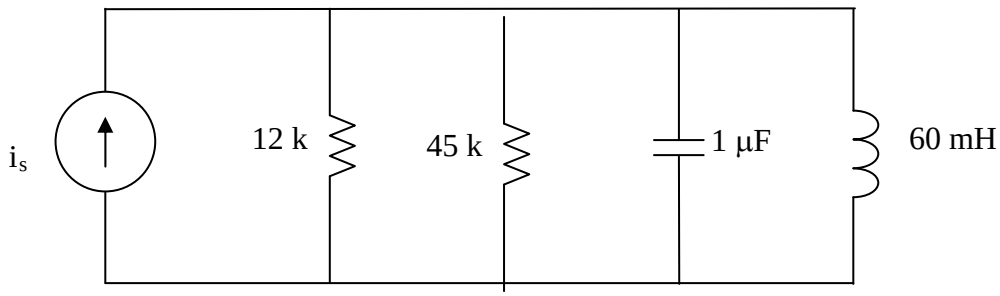

$$i_s = \frac{20}{12}\cos\omega t, \quad \text{R = 12//45= 12x45/57 = 9.4737 k}\Omega$$

$$\omega_o = \frac{1}{\sqrt{LC}} = \frac{1}{\sqrt{60x10^{-3}x1x10^{-6}}} = \underline{4.082 \text{ krad/s}} = \mathbf{4.082\ krad/s}$$

$$B = \frac{1}{RC} = \frac{1}{9.4737x10^{3}x10^{-6}} = \underline{105.55 \text{ rad/s}} = \mathbf{105.55\ rad/s}$$

$$Q = \frac{\omega_o}{B} = \frac{4082}{105.55} = \underline{38.674} = \mathbf{38.67}$$

4.082 krads/s, 105.55 rad/s, 38.67

www.konkur.in

Chapter 14, Solution 30.

(a) f_o = 15,000 Hz leads to $\omega_o = 2\pi f_o$ = 94.25 krad/s = $1/(LC)^{0.5}$ or

LC = $1/8.883\text{x}10^9$ or C = $1/(8.883\text{x}10^9\text{x}10^{-2})$ = $11.257\text{x}10^{-9}$ F = **11.257 pF**.

(b) since the capacitive reactance cancels out the inductive reactance at resonance, the current through the series circuit is given by

I = 120/20 = **6 A**.

(c) Q = $\omega_o L/R$ = $94.25\text{x}10^3(0.01)/20$ = **47.12**.

www.konkur.in

Chapter 14, Solution 31.

$$R = 10\,\Omega.$$

$$L = \frac{R}{\omega_0 Q} = \frac{10}{(10)(20)} = 0.05\text{ H} = 50\text{ mH}$$

$$C = \frac{1}{\omega_0^2 L} = \frac{1}{(100)(0.05)} = 0.2\text{ F}$$

$$\mathbf{B} = \frac{1}{\mathbf{RC}} = \frac{1}{(10)(0.2)} = \mathbf{0.5\ rad/s}$$

www.konkur.in

Chapter 14, Solution 32.

Design a problem to help other students to better understand the quality factor, the resonant frequency, and bandwidth of a parallel *RLC* circuit.

Although there are many ways to solve this problem, this is an example based on the same kind of problem asked in the third edition.

Problem

A parallel RLC circuit has the following values:

R = 60 Ω, L = 1 mH, and C = 50 μF

Find the quality factor, the resonant frequency, and the bandwidth of the RLC circuit.

Solution

$$\omega_o = \frac{1}{\sqrt{LC}} = \frac{1}{\sqrt{10^{-3} x 50 x 10^{-6}}} = \underline{4.472 \text{ krad/s}}$$

$$B = \frac{1}{RC} = \frac{1}{60 x 50 x 10^{-6}} = \underline{333.33 \text{ rad/s}}$$

$$Q = \frac{\omega_o}{B} = \frac{4472}{333.33} = \underline{13.42}$$

www.konkur.in

Chapter 14, Solution 33.

$B = \omega_o/Q = 6x10^6/120 =$ **50 krad/s**.

$\omega_1 = \omega_o - B =$ **5.95x10^6 rad/s** and $\omega_2 = \omega_o + B =$ **6.05x10^6 rad/s**.

www.konkur.in

Chapter 14, Solution 34.

$$\mathbf{Q} = \omega_o \mathbf{RC} \quad \longrightarrow \quad \mathbf{C} = \frac{\mathbf{Q}}{2\pi \mathbf{f_o R}} = \frac{80}{2\pi \mathbf{x} 5.6\mathbf{x}10^6\,\mathbf{x}40\mathbf{x}10^3} = \mathbf{56.84\ pF}$$

$$Q = \frac{R}{\omega_o L} \quad \longrightarrow \quad L = \frac{R}{2\pi f_o Q} = \frac{40x10^3}{2\pi x5.6x10^6\,x80} = \mathbf{14.21\ \mu H}$$

www.konkur.in

Chapter 14, Solution 35.

(a) $$\omega_o = \frac{1}{\sqrt{LC}} = \frac{1}{\sqrt{8x10^{-3}x60x10^{-6}}} = \underline{1.443\,krad/s}$$

(b) $$B = \frac{1}{RC} = \frac{1}{5x10^{3}x60x10^{-6}} = \underline{3.33\,rad/s}$$

(c) $$Q = \omega_o RC = 1.443x10^{3}x5x10^{3}x60x10^{-6} = \underline{432.9}$$

www.konkur.in

Chapter 14, Solution 36.

At resonance,

$$\mathbf{Y} = \frac{1}{R} \longrightarrow R = \frac{1}{Y} = \frac{1}{25\times10^{-3}} = \mathbf{40\,\Omega}$$

$$Q = \omega_0 RC \longrightarrow C = \frac{Q}{\omega_0 R} = \frac{80}{(200\times10^3)(40)} = \mathbf{10\ \mu F}$$

$$\omega_0 = \frac{1}{\sqrt{LC}} \longrightarrow L = \frac{1}{\omega_0^2 C} = \frac{1}{(4\times10^{10})(10\times10^{-6})} = \mathbf{2.5\ \mu H}$$

$$B = \frac{\omega_0}{Q} = \frac{200\times10^3}{80} = \mathbf{2.5\ krad/s}$$

$$\omega_1 = \omega_0 - \frac{B}{2} = 200 - 1.25 = \mathbf{198.75\ krad/s}$$

$$\omega_2 = \omega_0 + \frac{B}{2} = 200 + 1.25 = \mathbf{201.25\ krad/s}$$

www.konkur.in

Chapter 14, Solution 37.

$$\omega_0 = \frac{1}{\sqrt{LC}} = 5000 \text{ rad/s}$$

$$\mathbf{Y}(\omega_0) = \frac{1}{R} \quad \longrightarrow \quad \mathbf{Z}(\omega_0) = R = \mathbf{2\ k\Omega}$$

$$\mathbf{Y}(\omega_0/4) = \frac{1}{R} + j\left(\frac{\omega_0}{4}C - \frac{4}{\omega_0 L}\right) = 0.5 - j18.75 \text{ mS}$$

$$\mathbf{Z}(\omega_0/4) = \frac{1}{0.0005 - j0.01875} = \mathbf{(1.4212 + j53.3)\ \Omega}$$

$$\mathbf{Y}(\omega_0/2) = \frac{1}{R} + j\left(\frac{\omega_0}{2}C - \frac{2}{\omega_0 L}\right) = 0.5 - j7.5 \text{ mS}$$

$$\mathbf{Z}(\omega_0/2) = \frac{1}{0.0005 - j0.0075} = \mathbf{(8.85 + j132.74)\ \Omega}$$

$$\mathbf{Y}(2\omega_0) = \frac{1}{R} + j\left(2\omega_0 L - \frac{1}{2\omega_0 C}\right) = 0.5 + j7.5 \text{ mS}$$

$$\mathbf{Z}(2\omega_0) = \mathbf{(8.85 - j132.74)\ \Omega}$$

$$\mathbf{Y}(4\omega_0) = \frac{1}{R} + j\left(4\omega_0 L - \frac{1}{4\omega_0 C}\right) = 0.5 + j18.75 \text{ mS}$$

$$\mathbf{Z}(4\omega_0) = \mathbf{(1.4212 - j53.3)\ \Omega}$$

www.konkur.in

Chapter 14, Solution 38.

$$Z = j\omega L // (R + \frac{1}{j\omega C}) = \frac{j\omega L(R + \frac{1}{j\omega C})}{R + \frac{1}{j\omega C} + j\omega L} = \frac{\left(\frac{L}{C} + j\omega LR\right)\left(R - j(\omega L - \frac{1}{\omega C})\right)}{R^2 + (\omega L - \frac{1}{\omega C})^2}$$

$$\mathrm{Im}(Z) = \frac{\omega LR^2 - \frac{L}{C}\left(\omega L - \frac{1}{\omega C}\right)}{R^2 + (\omega L - \frac{1}{\omega C})^2} = 0 \qquad \longrightarrow \qquad \omega^2(LC - R^2C^2) = 1$$

Thus,

$$\boldsymbol{\omega = \frac{1}{\sqrt{LC - R^2C^2}}}$$

www.konkur.in

Chapter 14, Solution 39.

$$Y = \frac{1}{R + j\omega L} + j\omega C = j\omega C + \frac{R - j\omega L}{R^2 + \omega^2 L^2}$$

At resonance, $\text{Im}(\mathbf{Y}) = 0$, i.e.

$$\omega_0 C - \frac{\omega_0 L}{R^2 + \omega_0^2 L^2} = 0$$

$$R^2 + \omega_0^2 L^2 = \frac{L}{C}$$

$$\omega_0 = \sqrt{\frac{1}{LC} - \frac{R^2}{L^2}} = \sqrt{\frac{1}{(40\times10^{-3})(1\times10^{-6})} - \left(\frac{50}{40\times10^{-3}}\right)^2}$$

$\omega_0 =$ **4.841 krad/s**

www.konkur.in

Chapter 14, Solution 40.

(a) $B = \omega_2 - \omega_1 = 2\pi(f_2 - f_1) = 2\pi(90-86)x10^3 = 8\pi krad/s$

$$\omega_o = \frac{1}{2}(\omega_1 + \omega_2) = 2\pi(88)x10^3 = 176\pi X10^3$$

$$B = \frac{1}{RC} \longrightarrow C = \frac{1}{BR} = \frac{1}{8\pi x10^3 x2x10^3} = \underline{19.89nF}$$

(b) $\omega_o = \frac{1}{\sqrt{LC}} \longrightarrow L = \frac{1}{\omega^2{}_o C} = \frac{1}{(176\pi X10^3)^2 x19.89x10^{-9}} =$ **164.45 μH**

(c) $\omega_o = 176\pi = \underline{552.9krad/s}$

(d) $B = 8\pi = \underline{25.13krad/s}$

(e) $Q = \frac{\omega_o}{B} = \frac{176\pi}{8\pi} = \underline{22}$

www.konkur.in

Chapter 14, Solution 41.

Using Fig. 14.80, design a problem to help other students to better understand the quality factor, the resonant frequency, and bandwidth of an *RLC* circuit.

Although there are many ways to solve this problem, this is an example based on the same kind of problem asked in Example 14.9.

Problem

For the circuits in Fig. 14.80, find the resonant frequency ω_0, the quality factor Q, and the bandwidth B. Let C = 0.1 F, R_1 = 10 Ω, R_2 = 2 Ω, and L = 2 H.

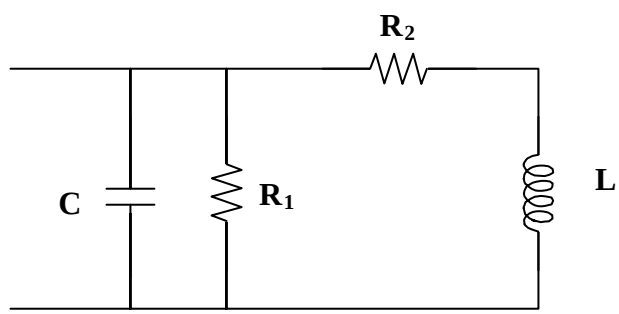

Figure 14.80
For Prob. 14.41.

Solution

To find ω_o, we need to find the input impedance or input admittance and set imaginary component equal to zero. Finding the input admittance seems to be the easiest approach.

$$\mathbf{Y} = j\omega 0.1 + 0.1 + 1/(2+j\omega 2) = j\omega 0.1 + 0.1 + [2/(4+4\omega^2)] - [j\omega 2/(4+4\omega^2)]$$

At resonance,

$$0.1\omega = 2\omega/(4+4\omega^2) \text{ or } 4\omega^2 + 4 = 20 \text{ or } \omega^2 = 4 \text{ or } \omega_o = \mathbf{2\ rad/s}$$

and,

$$\mathbf{Y} = 0.1 + 2/(4+16) = 0.1 + 0.1 = 0.2 \text{ S}$$

The bandwidth is define as the two values of ω such that $|\mathbf{Y}| = 1.4142(0.2) = 0.28284$ S.

I do not know about you, but I sure would not want to solve this analytically. So how about using MATLAB or excel to solve for the two values of ω?

www.konkur.in

Using Excel, we get ω_1 = 1.414 rad/s and ω_2 = 3.741 rad/s or B = **2.327 rad/s**

We can now use the relationship between ω_o and the bandwidth.

$$Q = \omega_o/B = 2/2.327 = \mathbf{0.8595}$$

www.konkur.in

Chapter 14, Solution 42.

(a) This is a series RLC circuit.

$$R = 2 + 6 = 8\,\Omega, \qquad L = 1\,H, \qquad C = 0.4\,F$$

$$\omega_0 = \frac{1}{\sqrt{LC}} = \frac{1}{\sqrt{0.4}} = \mathbf{1.5811\ rad/s}$$

$$Q = \frac{\omega_0 L}{R} = \frac{1.5811}{8} = \mathbf{0.1976}$$

$$B = \frac{R}{L} = \mathbf{8\ rad/s}$$

(b) This is a parallel RLC circuit.

$$3\ \mu F \text{ and } 6\ \mu F \longrightarrow \frac{(3)(6)}{3+6} = 2\ \mu F$$

$$C = 2\ \mu F, \qquad R = 2\ k\Omega, \qquad L = 20\ mH$$

$$\omega_0 = \frac{1}{\sqrt{LC}} = \frac{1}{\sqrt{(2\times10^{-6})(20\times10^{-3})}} = \mathbf{5\ krad/s}$$

$$Q = \frac{R}{\omega_0 L} = \frac{2\times10^{3}}{(5\times10^{3})(20\times10^{-3})} = \mathbf{20}$$

$$B = \frac{1}{RC} = \frac{1}{(2\times10^{3})(2\times10^{-6})} = \mathbf{250\ rad/s}$$

www.konkur.in

Chapter 14, Solution 43.

(a) $\mathbf{Z}_{in} = (1/j\omega C) \,||\, (R + j\omega L)$

$$\mathbf{Z}_{in} = \frac{\dfrac{R + j\omega L}{j\omega C}}{R + j\omega L + \dfrac{1}{j\omega C}} = \frac{R + j\omega L}{1 - \omega^2 LC + j\omega RC}$$

$$\mathbf{Z}_{in} = \frac{(R + j\omega L)(1 - \omega^2 LC - j\omega RC)}{(1 - \omega^2 LC)^2 + \omega^2 R^2 C^2}$$

At resonance, $\mathrm{Im}(\mathbf{Z}_{in}) = 0$, i.e.

$$0 = \omega_0 L(1 - \omega_0^2 LC) - \omega_0 R^2 C$$

$$\omega_0^2 L^2 C = L - R^2 C$$

$$\omega_0 = \sqrt{\frac{L - R^2 C}{L^2 C}} = \sqrt{\frac{\mathbf{1}}{\mathbf{LC}} - \frac{\mathbf{R^2}}{\mathbf{L^2}}}$$

(b) $\mathbf{Z}_{in} = R \,||\, (j\omega L + 1/j\omega C)$

$$\mathbf{Z}_{in} = \frac{R\,(j\omega L + 1/j\omega C)}{R + j\omega L + 1/j\omega C} = \frac{R\,(1 - \omega^2 LC)}{(1 - \omega^2 LC) + j\omega RC}$$

$$\mathbf{Z}_{in} = \frac{R\,(1 - \omega^2 LC)[(1 - \omega^2 LC) - j\omega RC]}{(1 - \omega^2 LC)^2 + \omega^2 R^2 C^2}$$

At resonance, $\mathrm{Im}(\mathbf{Z}_{in}) = 0$, i.e.

$$0 = R\,(1 - \omega^2 LC)\,\omega RC$$

$$1 - \omega^2 LC = 0$$

$$\omega_0 = \frac{\mathbf{1}}{\sqrt{\mathbf{LC}}}$$

www.konkur.in

Chapter 14, Solution 44.

Consider the circuit below.

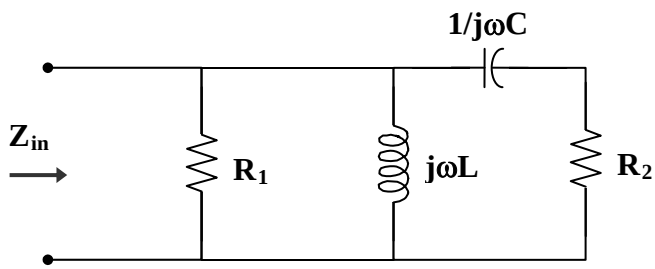

(a) $\mathbf{Z}_{in} = (R_1 \parallel j\omega L) \parallel (R_2 + 1/j\omega C)$

$$\mathbf{Z}_{in} = \left(\frac{R_1 j\omega L}{R_1 + j\omega L}\right) \parallel \left(R_2 + \frac{1}{j\omega C}\right)$$

$$\mathbf{Z}_{in} = \frac{\dfrac{j\omega R_1 L}{R_1 + j\omega L} \cdot \left(R_2 + \dfrac{1}{j\omega C}\right)}{R_2 + \dfrac{1}{j\omega C} + \dfrac{jR_1\omega L}{R_1 + j\omega L}}$$

$$\mathbf{Z}_{in} = \frac{j\omega R_1 L(1 + j\omega R_2 C)}{(R_1 + j\omega L)(1 + j\omega R_2 C) - \omega^2 LCR_1}$$

$$\mathbf{Z}_{in} = \frac{-\omega^2 R_1 R_2 LC + j\omega R_1 L}{R_1 - \omega^2 LCR_1 - \omega^2 LCR_2 + j\omega(L + R_1 R_2 C)}$$

$$\mathbf{Z}_{in} = \frac{(-\omega^2 R_1 R_2 LC + j\omega R_1 L)[R_1 - \omega^2 LCR_1 - \omega^2 LCR_2 - j\omega(L + R_1 R_2 C)]}{(R_1 - \omega^2 LCR_1 - \omega^2 LCR_2)^2 + \omega^2 (L + R_1 R_2 C)^2}$$

At resonance, $\mathrm{Im}(\mathbf{Z}_{in}) = 0$, i.e.

$$0 = \omega^3 R_1 R_2 LC(L + R_1 R_2 C) + \omega R_1 L(R_1 - \omega^2 LCR_1 - \omega^2 LCR_2)$$

$$0 = \omega^3 R_1^2 R_2^2 LC^2 + R_1^2 \omega L - \omega^3 R_1^2 L^2 C$$

$$0 = \omega^2 R_2^2 C^2 + 1 - \omega^2 LC$$

$$\omega^2 (LC - R_2^2 C^2) = 1$$

$$\omega_0 = \frac{1}{\sqrt{LC - R_2^2 C^2}}$$

$$\omega_0 = \frac{1}{\sqrt{(0.02)(9 \times 10^{-6}) - (0.1)^2 (9 \times 10^{-6})^2}}$$

$$\omega_0 = \mathbf{2.357\ krad/s}$$

www.konkur.in

(b) At $\omega = \omega_0 = 2.357 \text{ krad/s}$,

$$j\omega L = j(2.357\times10^3)(20\times10^{-3}) = j47.14$$

$$R_1 \parallel j\omega L = \frac{j47.14}{1+j47.14} = 0.9996 + j0.0212$$

$$R_2 + \frac{1}{j\omega C} = 0.1 + \frac{1}{j(2.357\times10^3)(9\times10^{-6})} = 0.1 - j47.14$$

$$\mathbf{Z}_{in}(\omega_0) = (R_1 \parallel j\omega L) \parallel (R_2 + 1/j\omega C)$$

$$\mathbf{Z}_{in}(\omega_0) = \frac{(0.9996 + j0.0212)(0.1 - j47.14)}{(0.9996 + j0.0212) + (0.1 - j47.14)}$$

$$\mathbf{Z}_{in}(\omega_0) = \mathbf{1\,\Omega}$$

www.konkur.in

Chapter 14, Solution 45.

Convert the voltage source to a current source as shown below.

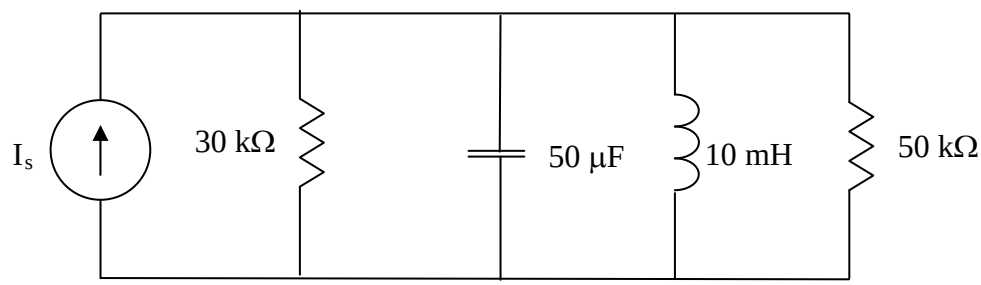

R = 30//50 = 30x50/80 = 18.75 kΩ

This is a parallel resonant circuit.

$$\omega_o = \frac{1}{\sqrt{LC}} = \frac{1}{\sqrt{10x10^{-3}x50x10^{-6}}} = \underline{447.21 \text{ rad/s}}$$

$$B = \frac{1}{RC} = \frac{1}{18.75x10^{3}x50x10^{-6}} = \underline{1.067 \text{ rad/s}}$$

$$Q = \frac{\omega_o}{B} = \frac{447.21}{1.067} = \underline{419.13}$$

447.2 rad/s, 1.067 rad/s, 419.1

www.konkur.in

Chapter 14, Solution 46.

(a) $1 \parallel j\omega = \dfrac{j\omega}{1+j\omega}$, $\qquad 1 \parallel \dfrac{1}{j\omega} = \dfrac{1/j\omega}{1+1/j\omega} = \dfrac{1}{1+j\omega}$

Transform the current source gives the circuit below.

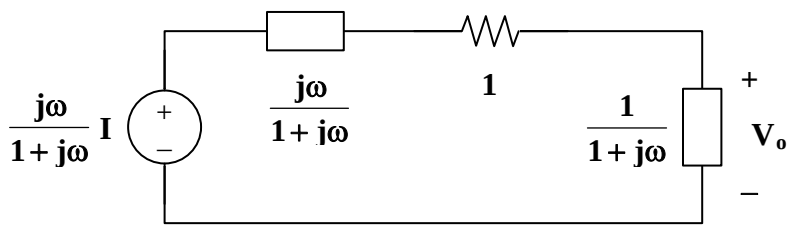

$$\mathbf{V}_o = \frac{\dfrac{1}{1+j\omega}}{1+\dfrac{1}{1+j\omega}+\dfrac{j\omega}{1+j\omega}} \cdot \frac{j\omega}{1+j\omega}\mathbf{I}$$

$$\mathbf{H}(\omega) = \frac{\mathbf{V}_o}{\mathbf{I}} = \frac{\mathbf{j\omega}}{\mathbf{2(1+j\omega)^2}}$$

(b) $\mathbf{H}(1) = \dfrac{1}{2(1+j)^2}$

$$\left|\mathbf{H}(1)\right| = \frac{1}{2(\sqrt{2})^2} = \mathbf{0.25}$$

www.konkur.in

Chapter 14, Solution 47.

$$\mathbf{H}(\omega) = \frac{\mathbf{V}_o}{\mathbf{V}_i} = \frac{R}{R + j\omega L} = \frac{1}{1 + j\omega L/R}$$

$H(0) = 1$ and $H(\infty) = 0$ showing that this circuit is a lowpass filter.

At the corner frequency, $\left| H(\omega_c) \right| = \frac{1}{\sqrt{2}}$, i.e.

$$\frac{1}{\sqrt{2}} = \frac{1}{\sqrt{1 + \left(\frac{\omega_c L}{R}\right)^2}} \longrightarrow 1 = \frac{\omega_c L}{R} \qquad \text{or} \qquad \omega_c = \frac{R}{L}$$

Hence,

$$\omega_c = \frac{R}{L} = 2\pi f_c$$

$$f_c = \frac{1}{2\pi} \cdot \frac{R}{L} = \frac{1}{2\pi} \cdot \frac{10 \times 10^3}{2 \times 10^{-3}} = \mathbf{796\ kHz}$$

www.konkur.in

Chapter 14, Solution 48.

$$\mathbf{H}(\omega) = \frac{R \parallel \dfrac{1}{j\omega C}}{j\omega L + R \parallel \dfrac{1}{j\omega C}}$$

$$\mathbf{H}(\omega) = \frac{\dfrac{R/j\omega C}{R + 1/j\omega C}}{j\omega L + \dfrac{R/j\omega C}{R + 1/j\omega C}}$$

$$\mathbf{H}(\omega) = \frac{\mathbf{R}}{\mathbf{R + j\omega L - \omega^2 RLC}}$$

$H(0) = 1$ and $H(\infty) = 0$ showing that **this circuit is a lowpass filter**.

www.konkur.in

Chapter 14, Solution 49.

Design a problem to help other students to better understand lowpass filters described by transfer functions.

Although there are many ways to solve this problem, this is an example based on the same kind of problem asked in the third edition.

Problem

Determine the cutoff frequency of the lowpass filter described by

$$\mathrm{H}(\omega) = \frac{4}{2 + j\omega 10}$$

Find the gain in dB and phase of **H**(ω) at $\omega = 2$ rad/s.

Solution

At dc, $\mathrm{H}(0) = \frac{4}{2} = 2$.

Hence, $$\left|\mathrm{H}(\omega)\right| = \frac{1}{\sqrt{2}}\mathrm{H}(0) = \frac{2}{\sqrt{2}}$$

$$\frac{2}{\sqrt{2}} = \frac{4}{\sqrt{4 + 100\omega_c^2}}$$

$$4 + 100\omega_c^2 = 8 \longrightarrow \omega_c = 0.2$$

$$\mathrm{H}(2) = \frac{4}{2 + \mathrm{j}20} = \frac{2}{1 + \mathrm{j}10}$$

$$\left|\mathrm{H}(2)\right| = \frac{2}{\sqrt{101}} = 0.199$$

In dB, $20\log_{10}\left|\mathrm{H}(2)\right| =$ **- 14.023**

$\arg \mathrm{H}(2) = -\tan^{-1}10 = -84.3°$ or $\omega_c =$ **1.4713 rad/sec**.

www.konkur.in

Chapter 14, Solution 50.

$$\mathbf{H}(\omega) = \frac{\mathbf{V}_o}{\mathbf{V}_i} = \frac{j\omega L}{R + j\omega L}$$

$H(0) = 0$ and $H(\infty) = 1$ showing that **this circuit is a highpass filter**.

$$\mathbf{H}(\omega_c) = \frac{1}{\sqrt{2}} = \frac{1}{\sqrt{1 + \left(\frac{R}{\omega_c L}\right)^2}} \longrightarrow 1 = \frac{R}{\omega_c L}$$

or $\quad \omega_c = \frac{R}{L} = 2\pi f_c$

$$f_c = \frac{1}{2\pi} \cdot \frac{R}{L} = \frac{1}{2\pi} \cdot \frac{200}{0.1} = \mathbf{318.3\ Hz}$$

www.konkur.in

Chapter 14, Solution 51.

The lowpass RL filter is shown below.

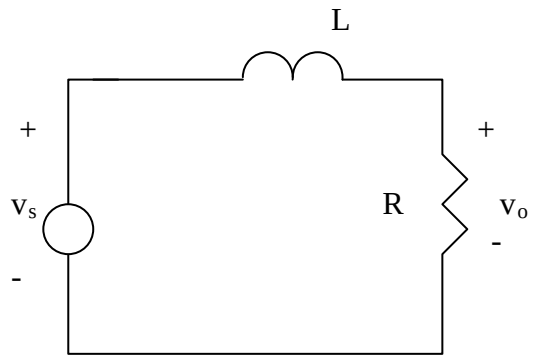

$$H = \frac{V_o}{V_s} = \frac{R}{R + j\omega L} = \frac{1}{1 + j\omega L / R}$$

$$\omega_c = \frac{R}{L} = 2\pi f_c \quad \longrightarrow \quad R = 2\pi f_c L = 2\pi x 5x10^3 x 40x10^{-3} = \underline{1.256k\Omega}$$

www.konkur.in

Chapter 14, Solution 52.

Design a problem to help other students to better understand passive highpass filters.

Although there are many ways to solve this problem, this is an example based on the same kind of problem asked in the third edition.

Problem

In a highpass *RL* filter with a cutoff frequency of 100 kHz, *L* = 40 mH. Find *R*.

Solution

$$\omega_c = \frac{R}{L} = 2\pi f_c$$

$$R = 2\pi f_c L = (2\pi)(10^5)(40 \times 10^{-3}) = \mathbf{25.13\ k\Omega}$$

www.konkur.in

Chapter 14, Solution 53.

$$\omega_1 = 2\pi f_1 = 20\pi \times 10^3$$
$$\omega_2 = 2\pi f_2 = 22\pi \times 10^3$$

$$B = \omega_2 - \omega_1 = 2\pi \times 10^3$$
$$\omega_0 = \frac{\omega_2 + \omega_1}{2} = 21\pi \times 10^3$$
$$Q = \frac{\omega_0}{B} = \frac{21\pi}{2\pi} = \mathbf{10.5}$$

$$\omega_0 = \frac{1}{\sqrt{LC}} \longrightarrow L = \frac{1}{\omega_0^2 C}$$
$$L = \frac{1}{(21\pi \times 10^3)^2 (80 \times 10^{-12})} = \mathbf{2.872\ H}$$

$$B = \frac{R}{L} \longrightarrow R = BL$$
$$R = (2\pi \times 10^3)(2.872) = \mathbf{18.045\ k\Omega}$$

www.konkur.in

Chapter 14, Solution 54.

We start with a series RLC circuit and the use the equations related to the circuit and the values for a bandstop filter.

$Q = \omega_o L/R = 1/(\omega_o CR) = 20$; $B = R/L = \omega_o/Q = 10/20 = 0.5$; $\omega_o = 1/(LC)^{0.5} = 10$

$(LC)^{0.5} = 0.1$ or $LC = 0.01$. Pick L = **10 H** then C = **1 mF**.

$Q = 20 = \omega_o L/R = 10x10/R$ or $R = 100/20 =$ **5 Ω**.

www.konkur.in

Chapter 14, Solution 55.

$$\omega_o = \frac{1}{\sqrt{LC}} = \frac{1}{\sqrt{(25\times10^{-3})(0.4\times10^{-6})}} = 10 \text{ krad/s}$$

$$B = \frac{R}{L} = \frac{10}{25\times10^{-3}} = 0.4 \text{ krad/s}$$

$$Q = \frac{10}{0.4} = \mathbf{25}$$

$$\omega_1 = \omega_o - B/2 = 10 - 0.2 = 9.8 \text{ krad/s} \qquad \text{or} \qquad f_1 = \frac{9.8}{2\pi} = 1.56 \text{ kHz}$$

$$\omega_2 = \omega_o + B/2 = 10 + 0.2 = 10.2 \text{ krad/s} \qquad \text{or} \qquad f_2 = \frac{10.2}{2\pi} = 1.62 \text{ kHz}$$

Therefore,

1.56 kHz < f < 1.62 kHz

www.konkur.in

Chapter 14, Solution 56.

(a) From Eq 14.54,

$$\mathbf{H}(s) = \frac{R}{R + sL + \frac{1}{sC}} = \frac{sRC}{1 + sRC + s^2LC} = \frac{s\frac{R}{L}}{s^2 + s\frac{R}{L} + \frac{1}{LC}}$$

Since $B = \frac{R}{L}$ and $\omega_0 = \frac{1}{\sqrt{LC}}$,

$$\mathbf{H}(s) = \frac{\mathbf{sB}}{\mathbf{s^2 + sB + \omega_0^2}}$$

(b) From Eq. 14.56,

$$\mathbf{H}(s) = \frac{sL + \frac{1}{sC}}{R + sL + \frac{1}{sC}} = \frac{s^2 + \frac{1}{LC}}{s^2 + s\frac{R}{L} + \frac{1}{LC}}$$

$$\mathbf{H}(s) = \frac{\mathbf{s^2 + \omega_0^2}}{\mathbf{s^2 + sB + \omega_0^2}}$$

www.konkur.in

Chapter 14, Solution 57.

(a) Consider the circuit below.

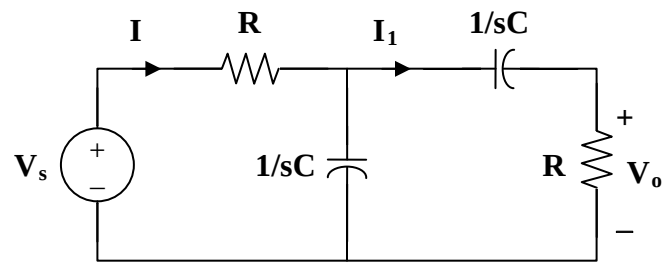

$$\mathbf{Z}(s) = R + \frac{1}{sC} \| \left(R + \frac{1}{sC}\right) = R + \frac{\frac{1}{sC}\left(R + \frac{1}{sC}\right)}{R + \frac{2}{sC}}$$

$$\mathbf{Z}(s) = R + \frac{1 + sRC}{sC(2 + sRC)}$$

$$\mathbf{Z}(s) = \frac{1 + 3sRC + s^2R^2C^2}{sC(2 + sRC)}$$

$$\mathbf{I} = \frac{\mathbf{V}_s}{\mathbf{Z}}$$

$$\mathbf{I}_1 = \frac{1/sC}{2/sC + R}\mathbf{I} = \frac{\mathbf{V}_s}{\mathbf{Z}(2 + sRC)}$$

$$\mathbf{V}_o = \mathbf{I}_1 R = \frac{R\,\mathbf{V}_s}{2 + sRC} \cdot \frac{sC(2 + sRC)}{1 + 3sRC + s^2R^2C^2}$$

$$\mathbf{H}(s) = \frac{\mathbf{V}_o}{\mathbf{V}_s} = \frac{sRC}{1 + 3sRC + s^2R^2C^2}$$

$$\mathbf{H}(s) = \frac{1}{3}\left[\frac{\frac{3}{RC}s}{s^2 + \frac{3}{RC}s + \frac{1}{R^2C^2}}\right]$$

Thus, $\omega_0^2 = \dfrac{1}{R^2C^2}$ or $\omega_0 = \dfrac{1}{RC} = \mathbf{1\ rad/s}$

$$B = \frac{3}{RC} = \mathbf{3\ rad/s}$$

www.konkur.in

(b) Similarly,

$$\mathbf{Z}(s) = sL + R \,||\, (R + sL) = sL + \frac{R\,(R + sL)}{2R + sL}$$

$$\mathbf{Z}(s) = \frac{R^2 + 3sRL + s^2L^2}{2R + sL}$$

$$\mathbf{I} = \frac{\mathbf{V}_s}{\mathbf{Z}}, \qquad \mathbf{I}_1 = \frac{R}{2R + sL}\mathbf{I} = \frac{R\,\mathbf{V}_s}{\mathbf{Z}\,(2R + sL)}$$

$$\mathbf{V}_o = \mathbf{I}_1 \cdot sL = \frac{sLR\,\mathbf{V}_s}{2R + sL} \cdot \frac{2R + sL}{R^2 + 3sRL + s^2L^2}$$

$$\mathbf{H}(s) = \frac{\mathbf{V}_o}{\mathbf{V}_s} = \frac{sRL}{R^2 + 3sRL + s^2L^2} = \frac{\frac{1}{3}\left(\frac{3R}{L}s\right)}{s^2 + \frac{3R}{L}s + \frac{R^2}{L^2}}$$

Thus, $\omega_0 = \frac{R}{L} = \mathbf{1\,rad/s}$

$B = \frac{3R}{L} = \mathbf{3\,rad/s}$

www.konkur.in

Chapter 14, Solution 58.

(a) $$\omega_0 = \frac{1}{\sqrt{LC}} = \frac{1}{\sqrt{(0.1)(40\times10^{-12})}} = \mathbf{0.5\times10^6\ rad/s}$$

(b) $$B = \frac{R}{L} = \frac{2\times10^3}{0.1} = 2\times10^4$$

$$Q = \frac{\omega_0}{B} = \frac{0.5\times10^6}{2\times10^4} = 25$$

As a high Q circuit,

$$\omega_1 = \omega_0 - \frac{B}{2} = 10^4\,(50-1) = \mathbf{490\ krad/s}$$

$$\omega_2 = \omega_0 + \frac{B}{2} = 10^4\,(50+1) = \mathbf{510\ krad/s}$$

(c) As seen in part (b), $Q = \mathbf{25}$

www.konkur.in

Chapter 14, Solution 59.

Consider the circuit below.

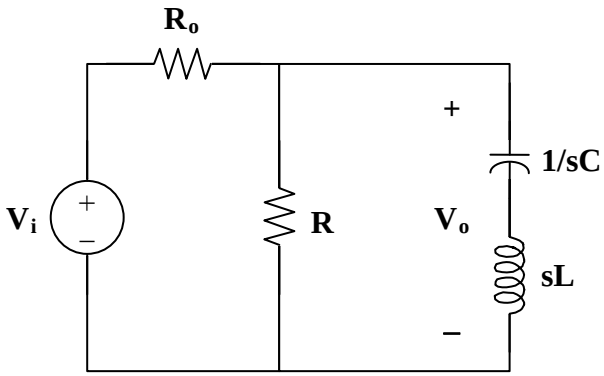

where L = 1 mH, C = 4 μF, R_o = 6 Ω, and R = 4 Ω.

$$\mathbf{Z}(s) = R \parallel \left(sL + \frac{1}{sC}\right) = \frac{R\,(sL + 1/sC)}{R + sL + 1/sC}$$

$$\mathbf{Z}(s) = \frac{R\,(1 + s^2LC)}{1 + sRC + s^2LC}$$

$$\mathbf{H} = \frac{\mathbf{V}_o}{\mathbf{V}_i} = \frac{\mathbf{Z}}{\mathbf{Z} + R_o} = \frac{R\,(1 + s^2LC)}{R_o + sRR_oC + s^2LCR_o + R + s^2LCR}$$

$$\mathbf{Z}_{in} = R_o + \mathbf{Z} = R_o + \frac{R\,(1 + s^2LC)}{1 + sRC + s^2LC}$$

$$\mathbf{Z}_{in} = \frac{R_o + sRR_oC + s^2LCR_o + R + s^2LCR}{1 + sRC + s^2LC}$$

$s = j\omega$

$$\mathbf{Z}_{in} = \frac{R_o + j\omega RR_oC - \omega^2LCR_o + R - \omega^2LCR}{1 - \omega^2LC + j\omega RC}$$

$$\mathbf{Z}_{in} = \frac{(R_o + R - \omega^2LCR_o - \omega^2LCR + j\omega RR_oC)(1 - \omega^2LC - j\omega RC)}{(1 - \omega^2LC)^2 + (\omega RC)^2}$$

$\mathrm{Im}(\mathbf{Z}_{in}) = 0$ implies that

$$-\omega RC[R_o + R - \omega^2LCR_o - \omega^2LCR] + \omega RR_oC(1 - \omega^2LC) = 0$$

www.konkur.in

$$R_o + R - \omega^2 LCR_o - \omega^2 LCR - R_o + \omega^2 LCR_o = 0$$
$$\omega^2 LCR = R$$

$$\omega_0 = \frac{1}{\sqrt{LC}} = \frac{1}{\sqrt{(1\times10^{-3})(4\times10^{-6})}} = \mathbf{15.811\ krad/s}$$

$$\mathbf{H} = \frac{R(1-\omega^2 LC)}{R_o + j\omega RR_oC + R - \omega^2 LCR_o - \omega^2 LCR}$$

$$H_{max} = H(0) = \frac{R}{R_o + R}$$

or $$H_{max} = H(\infty) = \lim_{\omega\to\infty} \frac{R\left(\frac{1}{\omega^2} - LC\right)}{\frac{R_o + R}{\omega^2} + j\frac{RR_oC}{\omega} - LC(R + R_o)} = \frac{R}{R + R_o}$$

At ω_1 and ω_2, $|\mathbf{H}| = \frac{1}{\sqrt{2}} H_{mzx}$

$$\frac{R}{\sqrt{2}(R_o + R)} = \left| \frac{R(1-\omega^2 LC)}{R_o + R - \omega^2 LC(R_o + R) + j\omega RR_oC} \right|$$

$$\frac{1}{\sqrt{2}} = \frac{(R_o + R)(1-\omega^2 LC)}{\sqrt{(\omega RR_oC)^2 + (R_o + R - \omega^2 LC(R_o + R))^2}}$$

$$\frac{1}{\sqrt{2}} = \frac{10(1-\omega^2\cdot4\times10^{-9})}{\sqrt{(96\times10^{-6}\omega)^2 + (10-\omega^2\cdot4\times10^{-8})^2}}$$

$$0 = \frac{10(1-\omega^2\cdot4\times10^{-9})}{\sqrt{(96\times10^{-6}\omega)^2 + (10-\omega^2\cdot4\times10^{-8})^2}} - \frac{1}{\sqrt{2}}$$

$$(10-\omega^2\cdot4\times10^{-8})(\sqrt{2}) - \sqrt{(96\times10^{-6}\omega)^2 + (10-\omega^2\cdot4\times10^{-8})^2} = 0$$

$$(2)(10-\omega^2\cdot4\times10^{-8})^2 = (96\times10^{-6}\omega)^2 + (10-\omega^2\cdot4\times10^{-8})^2$$

$$(96\times10^{-6}\omega)^2 - (10-\omega^2\cdot4\times10^{-8})^2 = 0$$

$$1.6\times10^{-15}\omega^4 - 8.092\times10^{-7}\omega^2 + 100 = 0$$

www.konkur.in

$$\omega^4 - 5.058\times10^8 + 6.25\times10^{16} = 0$$

$$\omega^2 = \begin{cases} 2.9109\times10^8 \\ 2.1471\times10^8 \end{cases}$$

Hence,

$$\omega_1 = 14.653 \text{ krad/s}$$

$$\omega_2 = 17.061 \text{ krad/s}$$

$$B = \omega_2 - \omega_1 = 17.061 - 14.653 = \mathbf{2.408\ krad/s}$$

www.konkur.in

Chapter 14, Solution 60.

$$\mathbf{H}'(\omega) = \frac{j\omega RC}{1 + j\omega RC} = \frac{j\omega}{j\omega + 1/RC} \qquad \text{(from Eq. 14.52)}$$

This has a unity passband gain, i.e. $H(\infty) = 1$.

$$\frac{1}{RC} = \omega_c = 50$$

$$\mathbf{H}^{\wedge}(\omega) = 10\,\mathbf{H}'(\omega) = \frac{j10\omega}{50 + j\omega}$$

$$\mathbf{H}(\omega) = \frac{\mathbf{j10\omega}}{\mathbf{50 + j\omega}}$$

www.konkur.in

Chapter 14, Solution 61.

(a) $\mathbf{V}_+ = \dfrac{1/j\omega C}{R + 1/j\omega C}\mathbf{V}_i$, $\qquad \mathbf{V}_- = \mathbf{V}_o$

Since $\mathbf{V}_+ = \mathbf{V}_-$,

$$\frac{1}{1 + j\omega RC}\mathbf{V}_i = \mathbf{V}_o$$

$$\mathbf{H}(\omega) = \frac{\mathbf{V}_o}{\mathbf{V}_i} = \frac{\mathbf{1}}{\mathbf{1 + j\omega RC}}$$

(b) $\mathbf{V}_+ = \dfrac{R}{R + 1/j\omega C}\mathbf{V}_i$, $\qquad \mathbf{V}_- = \mathbf{V}_o$

Since $\mathbf{V}_+ = \mathbf{V}_-$,

$$\frac{j\omega RC}{1 + j\omega RC}\mathbf{V}_i = \mathbf{V}_o$$

$$\mathbf{H}(\omega) = \frac{\mathbf{V}_o}{\mathbf{V}_i} = \frac{\mathbf{j\omega RC}}{\mathbf{1 + j\omega RC}}$$

www.konkur.in

Chapter 14, Solution 62.

This is a highpass filter.

$$\mathbf{H}(\omega) = \frac{j\omega RC}{1 + j\omega RC} = \frac{1}{1 - j/\omega RC}$$

$$\mathbf{H}(\omega) = \frac{1}{1 - j\omega_c/\omega}, \qquad \omega_c = \frac{1}{RC} = 2\pi(1000)$$

$$\mathbf{H}(\omega) = \frac{1}{1 - jf_c/f} = \frac{1}{1 - j1000/f}$$

(a) $$\mathbf{H}(f = 200\text{ Hz}) = \frac{1}{1 - j5} = \frac{\mathbf{V}_o}{\mathbf{V}_i}$$

$$|\mathbf{V}_o| = \frac{120\text{ mV}}{|1 - j5|} = \mathbf{23.53\ mV}$$

(b) $$\mathbf{H}(f = 2\text{ kHz}) = \frac{1}{1 - j0.5} = \frac{\mathbf{V}_o}{\mathbf{V}_i}$$

$$|\mathbf{V}_o| = \frac{120\text{ mV}}{|1 - j0.5|} = \mathbf{107.3\ mV}$$

(c) $$\mathbf{H}(f = 10\text{ kHz}) = \frac{1}{1 - j0.1} = \frac{\mathbf{V}_o}{\mathbf{V}_i}$$

$$|\mathbf{V}_o| = \frac{120\text{ mV}}{|1 - j0.1|} = \mathbf{119.4\ mV}$$

www.konkur.in

Chapter 14, Solution 63.

For an active highpass filter,

$$H(s) = -\frac{sC_i R_f}{1 + sC_i R_i} \qquad (1)$$

But

$$H(s) = -\frac{10s}{1 + s/10} \qquad (2)$$

Comparing (1) and (2) leads to:

$$\mathbf{C_i R_f = 10} \quad \longrightarrow \quad \mathbf{R_f = \frac{10}{C_i} = \underline{10M\Omega}}$$

$$\mathbf{C_i R_i = 0.1} \quad \longrightarrow \quad \mathbf{R_i = \frac{0.1}{C_i} = \underline{100k\Omega}}$$

www.konkur.in

Chapter 14, Solution 64.

$$Z_f = R_f \parallel \frac{1}{j\omega C_f} = \frac{R_f}{1 + j\omega R_f C_f}$$

$$Z_i = R_i + \frac{1}{j\omega C_i} = \frac{1 + j\omega R_i C_i}{j\omega C_i}$$

Hence,

$$\mathbf{H}(\omega) = \frac{\mathbf{V}_o}{\mathbf{V}_i} = \frac{-\mathbf{Z}_f}{\mathbf{Z}_i} = \frac{-j\omega \mathbf{R_f C_i}}{(1 + j\omega \mathbf{R_f C_f})(1 + j\omega \mathbf{R_i C_i})}$$

This is a bandpass filter. $\mathbf{H}(\omega)$ is similar to the product of the transfer function of a lowpass filter and a highpass filter.

www.konkur.in

Chapter 14, Solution 65.

$$\mathbf{V}_+ = \frac{R}{R + 1/j\omega C}\mathbf{V}_i = \frac{j\omega RC}{1 + j\omega RC}\mathbf{V}_i$$

$$\mathbf{V}_- = \frac{R_i}{R_i + R_f}\mathbf{V}_o$$

Since $\mathbf{V}_+ = \mathbf{V}_-$,

$$\frac{R_i}{R_i + R_f}\mathbf{V}_o = \frac{j\omega RC}{1 + j\omega RC}\mathbf{V}_i$$

$$\mathbf{H}(\omega) = \frac{\mathbf{V}_o}{\mathbf{V}_i} = \left(\mathbf{1} + \frac{\mathbf{R_f}}{\mathbf{R_i}}\right)\left(\frac{\mathbf{j\omega RC}}{\mathbf{1 + j\omega RC}}\right)$$

It is evident that as $\omega \to \infty$, the gain is $\mathbf{1} + \frac{\mathbf{R_f}}{\mathbf{R_i}}$ and that the corner frequency is $\frac{\mathbf{1}}{\mathbf{RC}}$.

www.konkur.in

Chapter 14, Solution 66.

(a) **Proof**

(b) When $\mathbf{R_1R_4 = R_2R_3}$,

$$\mathbf{H}(s) = \frac{R_4}{R_3 + R_4} \cdot \frac{s}{s + 1/R_2C}$$

(c) When $\mathbf{R_3 \to \infty}$,

$$\mathbf{H}(s) = \frac{-1/R_1C}{s + 1/R_2C}$$

www.konkur.in

Chapter 14, Solution 67.

$$\text{DC gain} = \frac{R_f}{R_i} = \frac{1}{4} \longrightarrow R_i = 4R_f$$

$$\text{Corner frequency} = \omega_c = \frac{1}{R_f C_f} = 2\pi(500)\ \text{rad/s}$$

If we select $R_f = 20\ \text{k}\Omega$, then $R_i = 80\ \text{k}\Omega$ and

$$C = \frac{1}{(2\pi)(500)(20\times10^3)} = 15.915\ \text{nF}$$

Therefore, if $R_f =$ **20 kΩ**, then $R_i =$ **80 kΩ** and $C =$ **15.915 nF**

www.konkur.in

Chapter 14, Solution 68.

Design a problem to help other students to better understand the design of active highpass filters when specifying a high-frequency gain and a corner frequency.

Although there are many ways to solve this problem, this is an example based on the same kind of problem asked in the third edition.

Problem

Design an active highpass filter with a high-frequency gain of 5 and a corner frequency of 200 Hz.

Solution

$$\text{High frequency gain} = 5 = \frac{R_f}{R_i} \longrightarrow R_f = 5R_i$$

$$\text{Corner frequency} = \omega_c = \frac{1}{R_i C_i} = 2\pi(200)\ \text{rad/s}$$

If we select $R_i = 20\ \text{k}\Omega$, then $R_f = 100\ \text{k}\Omega$ and

$$C = \frac{1}{(2\pi)(200)(20\times 10^3)} = 39.8\ \text{nF}$$

Therefore, if $R_i =$ **20 kΩ**, then $R_f =$ **100 kΩ** and $C =$ **39.8 nF**

www.konkur.in

Chapter 14, Solution 69.

This is a highpass filter with $f_c = 2$ kHz.

$$\omega_c = 2\pi f_c = \frac{1}{RC}$$

$$RC = \frac{1}{2\pi f_c} = \frac{1}{4\pi \times 10^3}$$

10^8 Hz may be regarded as high frequency. Hence the high-frequency gain is

$$\frac{-R_f}{R} = \frac{-10}{4} \qquad \text{or} \qquad R_f = 2.5R$$

If we let $R = \mathbf{10\ k\Omega}$, then $R_f = \mathbf{25\ k\Omega}$, and $C = \dfrac{1}{4000\pi \times 10^4} = \mathbf{7.96\ nF}$.

www.konkur.in

Chapter 14, Solution 70.

(a) $$\mathbf{H}(s) = \frac{\mathbf{V}_o(s)}{\mathbf{V}_i(s)} = \frac{Y_1 Y_2}{Y_1 Y_2 + Y_4 (Y_1 + Y_2 + Y_3)}$$

where $Y_1 = \frac{1}{R_1} = G_1$, $Y_2 = \frac{1}{R_2} = G_2$, $Y_3 = sC_1$, $Y_4 = sC_2$.

$$\mathbf{H}(s) = \frac{\mathbf{G_1 G_2}}{\mathbf{G_1 G_2 + sC_2 (G_1 + G_2 + sC_1)}}$$

(b) $$H(0) = \frac{G_1 G_2}{G_1 G_2} = 1, \qquad H(\infty) = 0$$

showing that **this circuit is a lowpass filter**.

www.konkur.in

Chapter 14, Solution 71.

$R = 50\,\Omega,\ L = 40\text{ mH},\ C = 1\,\mu F$

$$L' = \frac{K_m}{K_f}L \longrightarrow 1 = \frac{K_m}{K_f}\cdot(40\times10^{-3})$$

$$25K_f = K_m \qquad (1)$$

$$C' = \frac{C}{K_m K_f} \longrightarrow 1 = \frac{10^{-6}}{K_m K_f}$$

$$10^6 K_f = \frac{1}{K_m} \qquad (2)$$

Substituting (1) into (2),

$$10^6 K_f = \frac{1}{25K_f}$$

$$K_f = \mathbf{2x10^{-4}}$$

$$K_m = 25K_f = \mathbf{5\times10^{-3}}$$

www.konkur.in

Chapter 14, Solution 72.

Design a problem to help other students to better understand magnitude and frequency scaling.

Although there are many ways to solve this problem, this is an example based on the same kind of problem asked in the third edition.

Problem

What values of K_m and K_f will scale a 4-mH inductor and a 20-μF capacitor to 1 H and 2 F respectively?

Solution

$$L'C' = \frac{LC}{K_f^2} \longrightarrow K_f^2 = \frac{LC}{L'C'}$$

$$K_f^2 = \frac{(4\times10^{-3})(20\times10^{-6})}{(1)(2)} = 4\times10^{-8}$$

$$K_f = \mathbf{2\times10^{-4}}$$

$$\frac{L'}{C'} = \frac{L}{C}K_m^2 \longrightarrow K_m^2 = \frac{L'}{C'}\cdot\frac{C}{L}$$

$$K_m^2 = \frac{(1)(20\times10^{-6})}{(2)(4\times10^{-3})} = 2.5\times10^{-3}$$

$$K_m = \mathbf{5\times10^{-2}}$$

www.konkur.in

Chapter 14, Solution 73.

$$R' = K_m R = (12)(800 \times 10^3) = \mathbf{9.6\ M\Omega}$$

$$L' = \frac{K_m}{K_f} L = \frac{800}{1000}(40 \times 10^{-6}) = \mathbf{32\ \mu F}$$

$$C' = \frac{C}{K_m K_f} = \frac{300 \times 10^{-9}}{(800)(1000)} = \mathbf{0.375\ pF}$$

www.konkur.in

Chapter 14, Solution 74.

$$R'_1 = K_m R_1 = 3x100 = \underline{300\Omega}$$

$$R'_2 = K_m R_2 = 10x100 = \underline{1\,k\Omega}$$

$$L' = \frac{K_m}{K_f} L = \frac{10^2}{10^6}(2) = \underline{200\,\mu H}$$

$$C' = \frac{C}{K_m K_f} = \frac{\frac{1}{10}}{10^8} = \underline{1\,nF}$$

www.konkur.in

Chapter 14, Solution 75.

$$R' = K_m R = 20x10 = \underline{200\,\Omega}$$

$$L' = \frac{K_m}{K_f} L = \frac{10}{10^5}(4) = \underline{400\,\mu H}$$

$$C' = \frac{C}{K_m K_f} = \frac{1}{10x10^5} = \underline{1\,\mu F}$$

www.konkur.in

Chapter 14, Solution 76.

$$R' = K_m R = 500x5x10^3 = \underline{25\ \text{M}\Omega}$$

$$L' = \frac{K_m}{K_f} L = \frac{500}{10^5}(10mH) = \underline{50\ \mu\text{H}}$$

$$C' = \frac{C}{K_m K_f} = \frac{20x10^{-6}}{500x10^5} = \underline{0.4\ \text{pF}}$$

www.konkur.in

Chapter 14, Solution 77.

L and C are needed before scaling.

$$B = \frac{R}{L} \longrightarrow L = \frac{R}{B} = \frac{10}{5} = 2\text{ H}$$

$$\omega_0 = \frac{1}{\sqrt{LC}} \longrightarrow C = \frac{1}{\omega_0^2 L} = \frac{1}{(1600)(2)} = 312.5\ \mu\text{F}$$

(a) $L' = K_m L = (600)(2) = \mathbf{1.200\ kH}$

$$C' = \frac{C}{K_m} = \frac{3.125\times10^{-4}}{600} = \mathbf{0.5208\ \mu F}$$

(b) $L' = \dfrac{L}{K_f} = \dfrac{2}{10^3} = \mathbf{2\ mH}$

$$C' = \frac{C}{K_f} = \frac{3.125\times10^{-4}}{10^3} = \mathbf{312.5\ nF}$$

(c) $L' = \dfrac{K_m}{K_f} L = \dfrac{(400)(2)}{10^5} = \mathbf{8\ mH}$

$$C' = \frac{C}{K_m K_f} = \frac{3.125\times10^{-4}}{(400)(10^5)} = \mathbf{7.81\ pF}$$

www.konkur.in

Chapter 14, Solution 78.

$$R' = K_m R = (1000)(1) = 1\ \text{k}\Omega$$
$$L' = \frac{K_m}{K_f} L = \frac{10^3}{10^4}(1) = 0.1\ \text{H}$$
$$C' = \frac{C}{K_m K_f} = \frac{1}{(10^3)(10^4)} = 0.1\ \mu\text{F}$$

The new circuit is shown below.

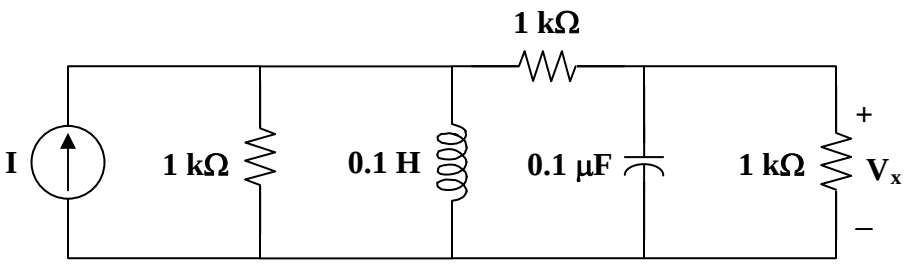

Chapter 14, Solution 79.

(a) Insert a 1-V source at the input terminals.

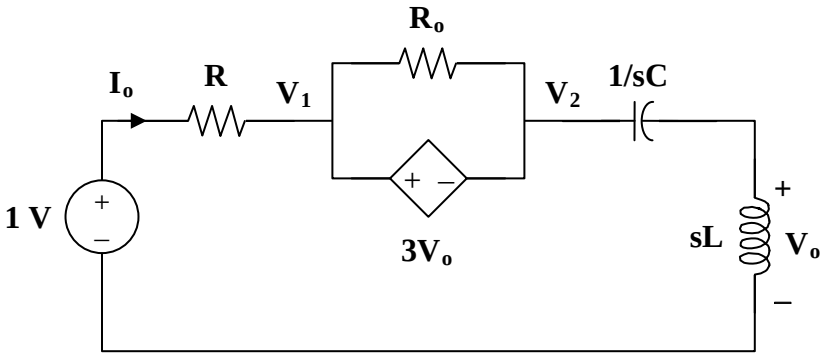

There is a supernode.

$$\frac{1-\mathbf{V}_1}{R} = \frac{\mathbf{V}_2}{sL + 1/sC} \qquad (1)$$

But $\quad \mathbf{V}_1 = \mathbf{V}_2 + 3\mathbf{V}_o \longrightarrow \mathbf{V}_2 = \mathbf{V}_1 - 3\mathbf{V}_o \qquad (2)$

Also, $\quad \mathbf{V}_o = \dfrac{sL}{sL + 1/sC}\mathbf{V}_2 \longrightarrow \dfrac{\mathbf{V}_o}{sL} = \dfrac{\mathbf{V}_2}{sL + 1/sC} \qquad (3)$

Combining (2) and (3)

$$\mathbf{V}_2 = \mathbf{V}_1 - 3\mathbf{V}_o = \frac{sL + 1/sC}{sL}\mathbf{V}_o$$

$$\mathbf{V}_o = \frac{s^2LC}{1 + 4s^2LC}\mathbf{V}_1 \qquad (4)$$

Substituting (3) and (4) into (1) gives

$$\frac{1-\mathbf{V}_1}{R} = \frac{\mathbf{V}_o}{sL} = \frac{sC}{1 + 4s^2LC}\mathbf{V}_1$$

$$1 = \mathbf{V}_1 + \frac{sRC}{1 + 4s^2LC}\mathbf{V}_1 = \frac{1 + 4s^2LC + sRC}{1 + 4s^2LC}\mathbf{V}_1$$

$$\mathbf{V}_1 = \frac{1 + 4s^2LC}{1 + 4s^2LC + sRC}$$

$$\mathbf{I}_o = \frac{1-\mathbf{V}_1}{R} = \frac{sRC}{R\,(1 + 4s^2LC + sRC)}$$

$$\mathbf{Z}_{in} = \frac{1}{\mathbf{I}_o} = \frac{1 + sRC + 4s^2LC}{sC}$$

www.konkur.in

$$\mathbf{Z}_{in} = 4sL + R + \frac{1}{sC} \qquad (5)$$

When $R = 5$, $L = 2$, $C = 0.1$,

$$\mathbf{Z}_{in}(s) = \mathbf{8s + 5 + \frac{10}{s}}$$

At resonance,

$$\text{Im}(\mathbf{Z}_{in}) = 0 = 4\omega L - \frac{1}{\omega C}$$

or $$\omega_0 = \frac{1}{2\sqrt{LC}} = \frac{1}{2\sqrt{(0.1)(2)}} = \mathbf{1.118\ rad/s}$$

(b) After scaling,

$$R' \longrightarrow K_m R$$

$$4\,\Omega \longrightarrow 40\,\Omega$$

$$5\,\Omega \longrightarrow 50\,\Omega$$

$$L' = \frac{K_m}{K_f} L = \frac{10}{100}(2) = 0.2\text{ H}$$

$$C' = \frac{C}{K_m K_f} = \frac{0.1}{(10)(100)} = 10^{-4}$$

From (5),

$$\mathbf{Z}_{in}(s) = \mathbf{0.8s + 50 + \frac{10^4}{s}}$$

$$\omega_0 = \frac{1}{2\sqrt{LC}} = \frac{1}{2\sqrt{(0.2)(10^{-4})}} = \mathbf{111.8\ rad/s}$$

www.konkur.in

Chapter 14, Solution 80.

(a) $R' = K_m R = (200)(2) = 400\ \Omega$

$$L' = \frac{K_m L}{K_f} = \frac{(200)(1)}{10^4} = 20\text{ mH}$$

$$C' = \frac{C}{K_m K_f} = \frac{0.5}{(200)(10^4)} = 0.25\ \mu\text{F}$$

The new circuit is shown below.

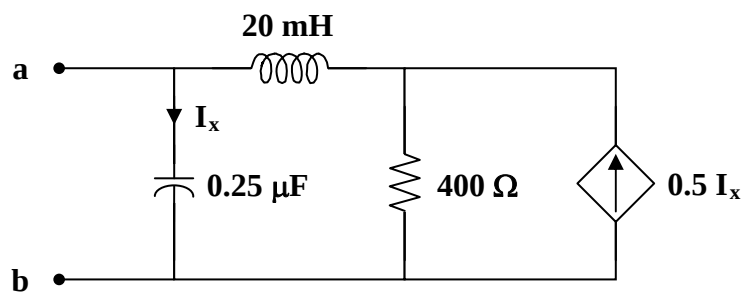

(b) Insert a 1-A source at the terminals a-b.

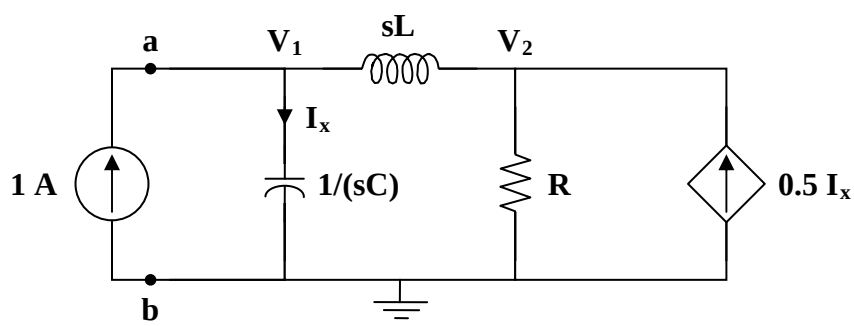

At node 1,

$$1 = sC\mathbf{V}_1 + \frac{\mathbf{V}_1 - \mathbf{V}_2}{sL} \qquad (1)$$

At node 2,

$$\frac{\mathbf{V}_1 - \mathbf{V}_2}{sL} + 0.5\mathbf{I}_x = \frac{\mathbf{V}_2}{R}$$

But, $\mathbf{I}_x = sC\mathbf{V}_1$.

$$\frac{\mathbf{V}_1 - \mathbf{V}_2}{sL} + 0.5sC\mathbf{V}_1 = \frac{\mathbf{V}_2}{R} \qquad (2)$$

www.konkur.in

Solving (1) and (2),

$$\mathbf{V}_1 = \frac{sL + R}{s^2LC + 0.5sCR + 1}$$

$$\mathbf{Z}_{Th} = \frac{\mathbf{V}_1}{1} = \frac{sL + R}{s^2LC + 0.5sCR + 1}$$

At $\omega = 10^4$,

$$\mathbf{Z}_{Th} = \frac{(j10^4)(20 \times 10^{-3}) + 400}{(j10^4)^2(20 \times 10^{-3})(0.25 \times 10^{-6}) + 0.5(j10^4)(0.25 \times 10^{-6})(400) + 1}$$

$$\mathbf{Z}_{Th} = \frac{400 + j200}{0.5 + j0.5} = 600 - j200$$

$$\mathbf{Z}_{Th} = \mathbf{632.5\angle -18.435^\circ \text{ ohms}}$$

www.konkur.in

Chapter 14, Solution 81.

(a)

$$\frac{1}{Z} = G + j\omega C + \frac{1}{R + j\omega L} = \frac{(G + j\omega C)(R + j\omega L) + 1}{R + j\omega L}$$

$$\text{which leads to} \qquad Z = \frac{j\omega L + R}{-\omega^2 LC + j\omega(RC + LG) + GR + 1}$$

$$Z(\omega) = \frac{j\dfrac{\omega}{C} + \dfrac{R}{LC}}{-\omega^2 + j\omega\left(\dfrac{R}{L} + \dfrac{G}{C}\right) + \dfrac{GR + 1}{LC}} \qquad (1)$$

We compare this with the given impedance:

$$Z(\omega) = \frac{1000(j\omega + 1)}{-\omega^2 + 2j\omega + 1 + 2500} \qquad (2)$$

Comparing (1) and (2) shows that

$$\frac{1}{C} = 1000 \quad \longrightarrow \quad C = 1\,\text{mF}, \qquad R/L = 1 \quad \longrightarrow \quad R = L$$

$$\frac{R}{L} + \frac{G}{C} = 2 \quad \longrightarrow \quad G = C = 1\ \text{mS}$$

$$2501 = \frac{GR + 1}{LC} = \frac{10^{-3}R + 1}{10^{-3}R} \quad \longrightarrow \quad R = 0.4 = L$$

Thus,

R = **0.4Ω**, L = **0.4 H**, C = **1 mF**, G = **1 mS**

(b) By frequency-scaling, K_f =1000.

R' = **0.4 Ω**, G' = **1 mS**

$$\mathbf{L' = \frac{L}{K_f} = \frac{0.4}{10^3} = \underline{0.4mH}}, \qquad \mathbf{C' = \frac{C}{K_f} = \frac{10^{-3}}{10^{-3}} = \underline{1\mu F}}$$

www.konkur.in

Chapter 14, Solution 82.

$$C' = \frac{C}{K_m K_f}$$

$$K_f = \frac{\omega_c'}{\omega} = \frac{200}{1} = 200$$

$$K_m = \frac{C}{C'} \cdot \frac{1}{K_f} = \frac{1}{10^{-6}} \cdot \frac{1}{200} = 5000$$

$R' = K_m R =$ **5 kΩ**, thus, $R_f' = 2R_i =$ **10 kΩ**

www.konkur.in

Chapter 14, Solution 83.

$$1\mu F \longrightarrow C' = \frac{1}{K_m K_f} C = \frac{10^{-6}}{100x10^5} = \underline{0.1\,pF}$$

$$5\mu F \longrightarrow C' = \underline{0.5\,pF}$$

$$10\,k\Omega \longrightarrow R' = K_m R = 100x10\,k\Omega = \underline{1\,M\Omega}$$

$$20\,k\Omega \longrightarrow R' = \underline{2\,M\Omega}$$

www.konkur.in

Chapter 14, Solution 84.

The schematic is shown below. A voltage marker is inserted to measure v_o. In the AC sweep box, we select Total Points = 50, Start Frequency = 1, and End Frequency = 1000. After saving and simulation, we obtain the magnitude and phase plots in the probe menu as shown below.

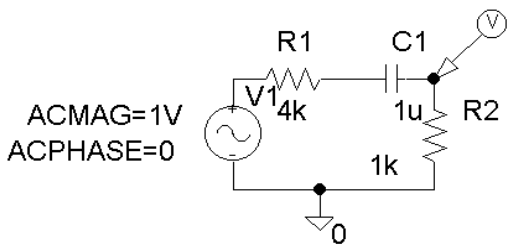

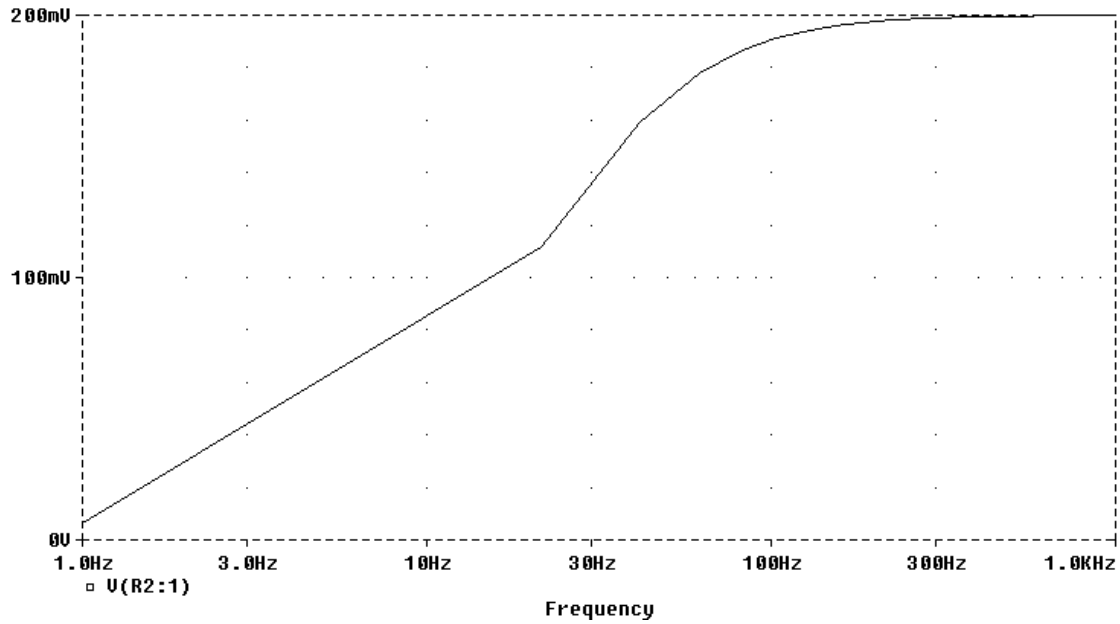

www.konkur.in

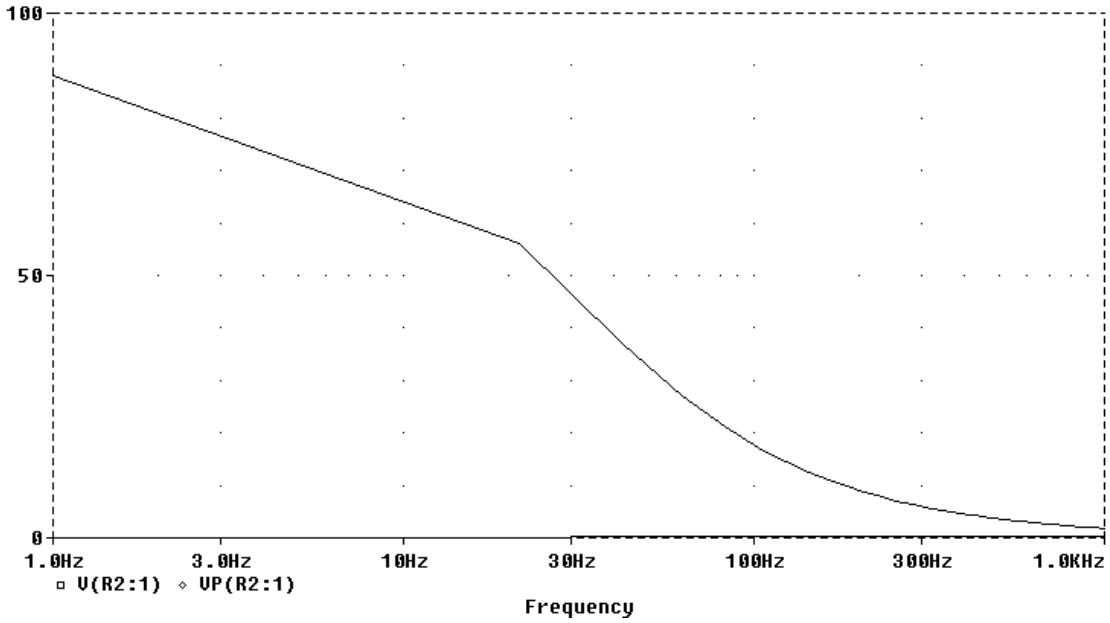

Chapter 14, Solution 85.

We let $I_s = 1\angle 0^o$ A so that $V_o / I_s = V_o$. The schematic is shown below. The circuit is simulated for 100 < f < 10 kHz.

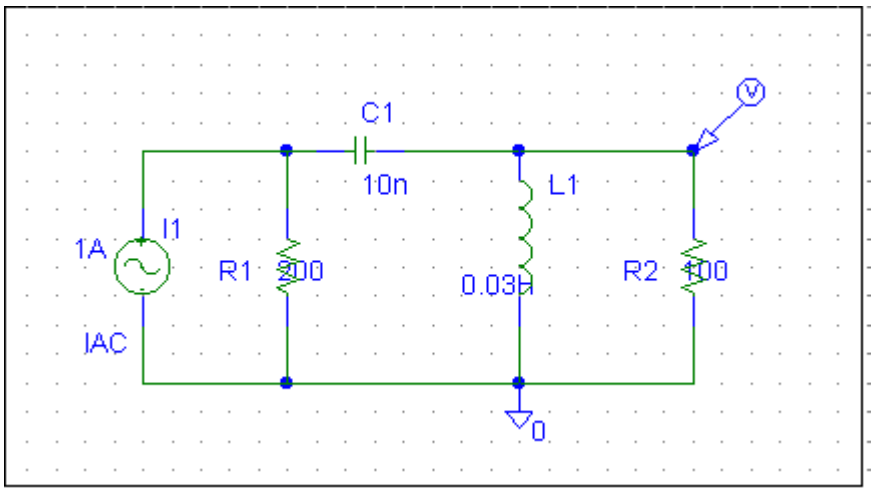

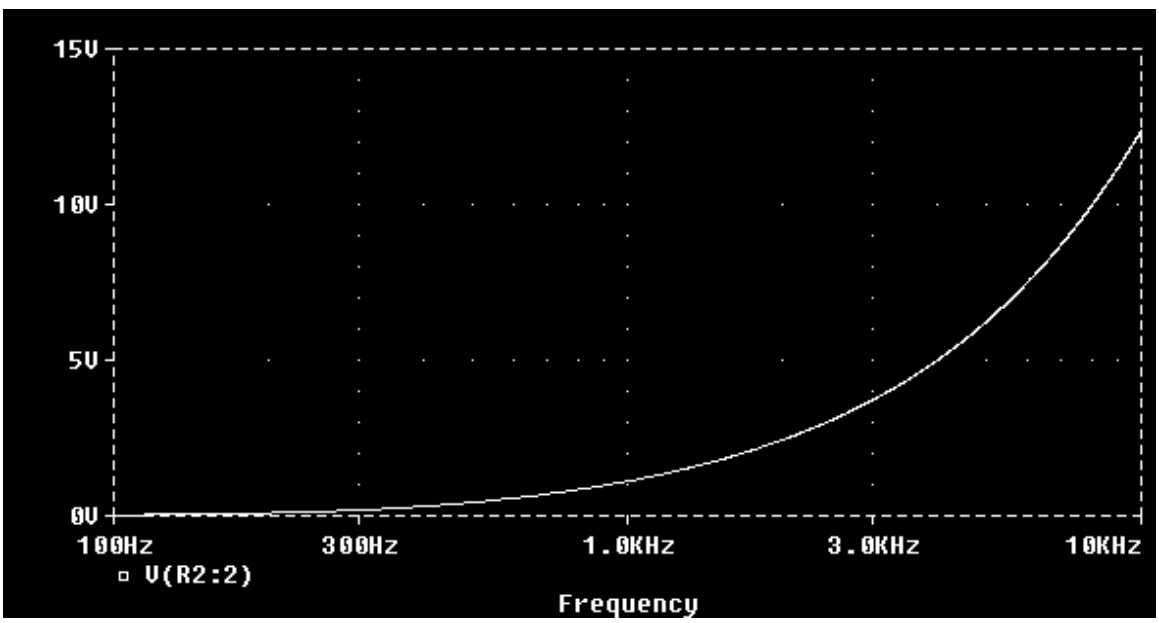

www.konkur.in

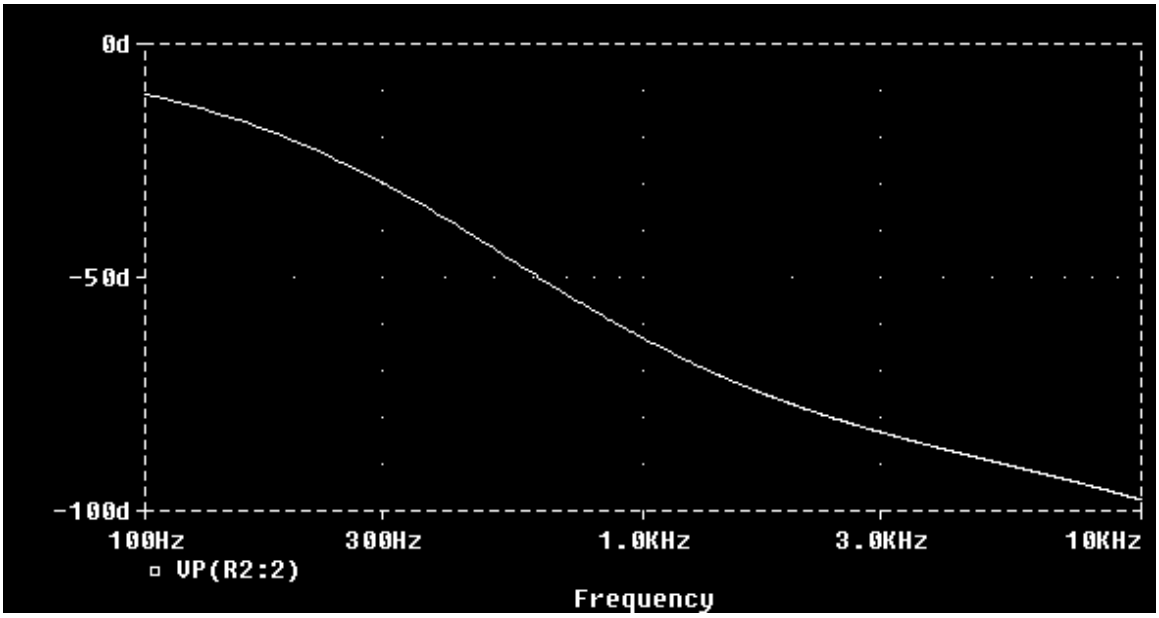

www.konkur.in

Chapter 14, Solution 86.

Using Fig. 14.103, design a problem to help other students to better understand how to use PSpice to obtain the frequency response (magnitude and phase of I) in electrical circuits.

Although there are many ways to solve this problem, this is an example based on the same kind of problem asked in the third edition.

Problem

Use *PSpice* to provide the frequency response (magnitude and phase of *i*) of the circuit in Fig. 14.103. Use linear frequency sweep from 1 to 10,000 Hz.

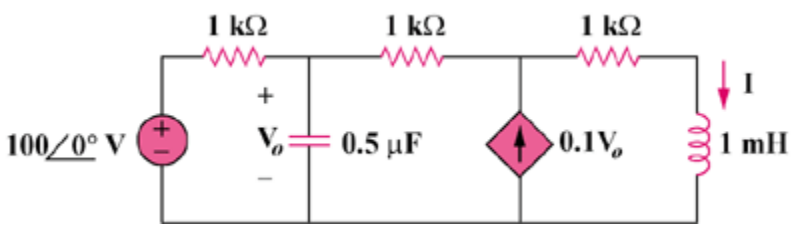

Figure 14.103

Solution

The schematic is shown below. A current marker is inserted to measure **I**. We set Total Points = 101, start Frequency = 1, and End Frequency = 10 kHz in the AC sweep box. After simulation, the magnitude and phase plots are obtained in the Probe menu as shown below.

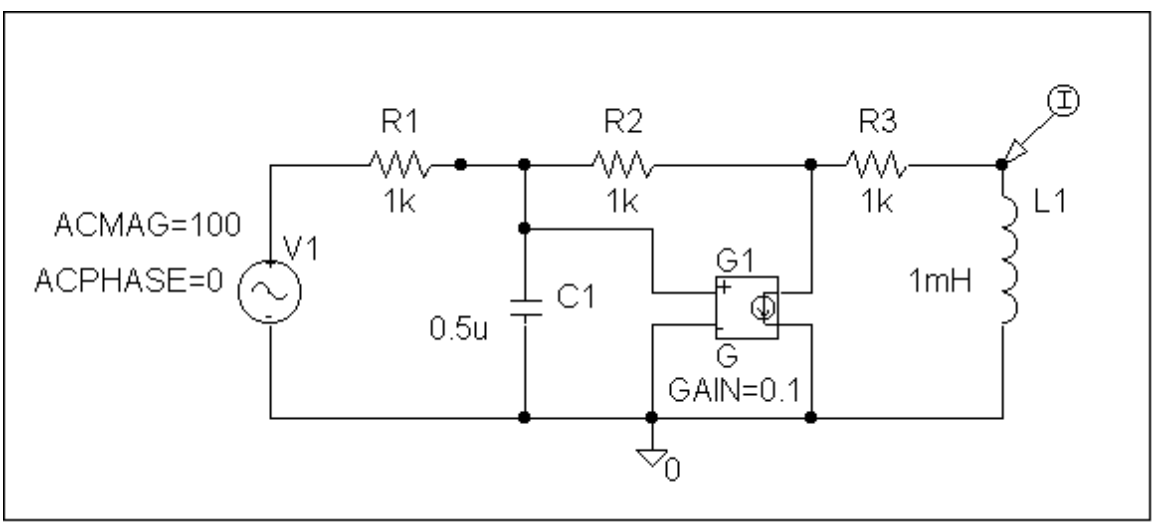

www.konkur.in

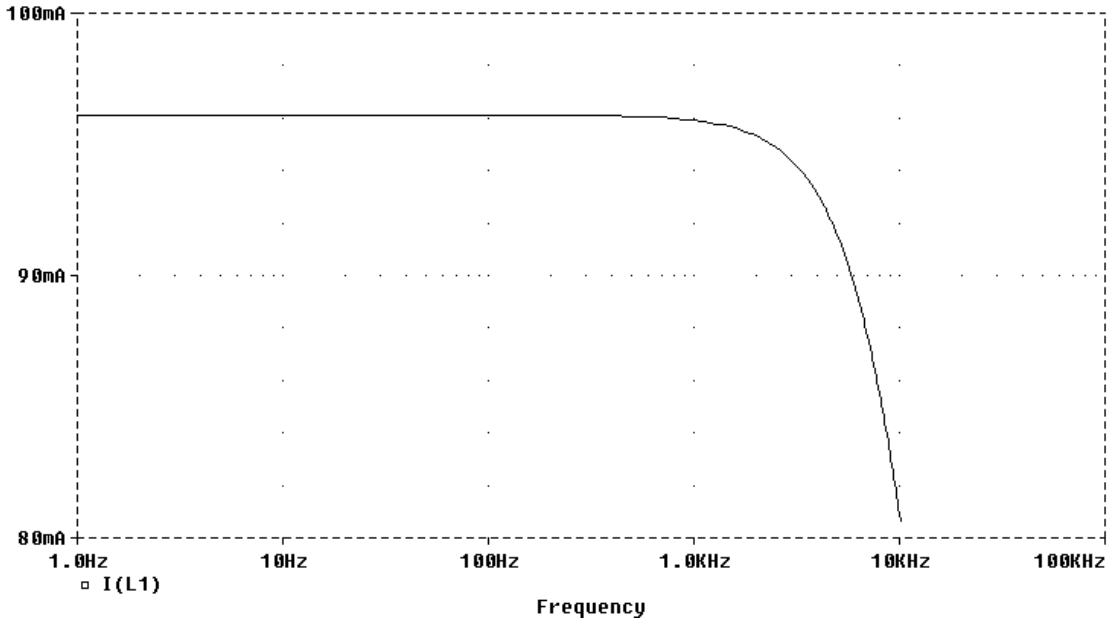

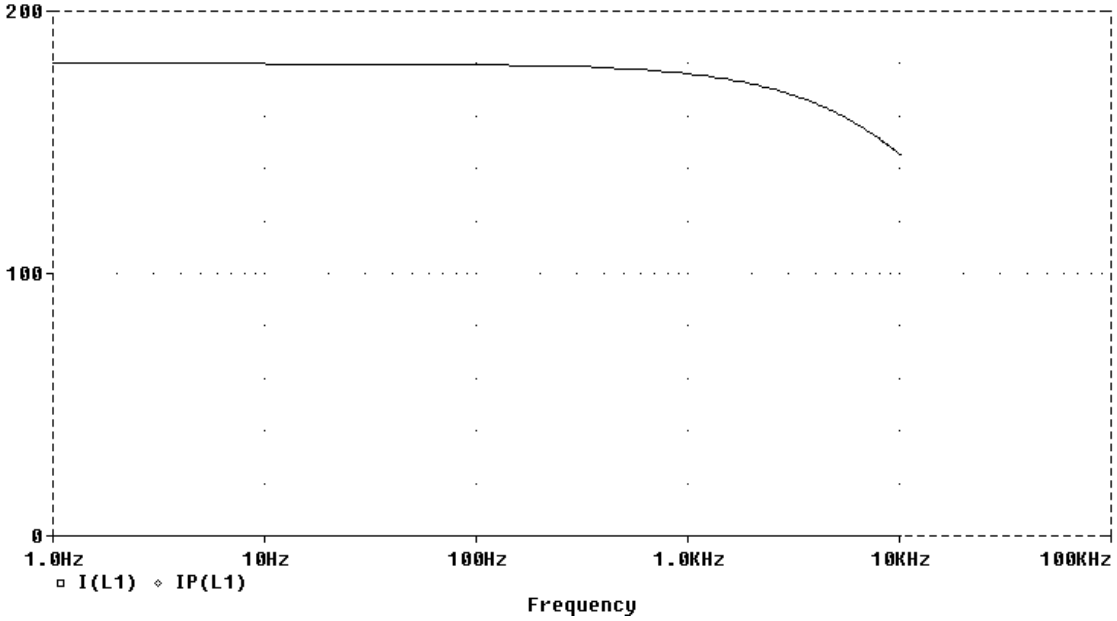

www.konkur.in

Chapter 14, Solution 87.

The schematic is shown below. I_n the AC Sweep box, we set Total Points = 50, Start Frequency = 1, and End Frequency = 100. After simulation, we obtain the magnitude response as shown below. It is evident from the response that the circuit represents a high-pass filter.

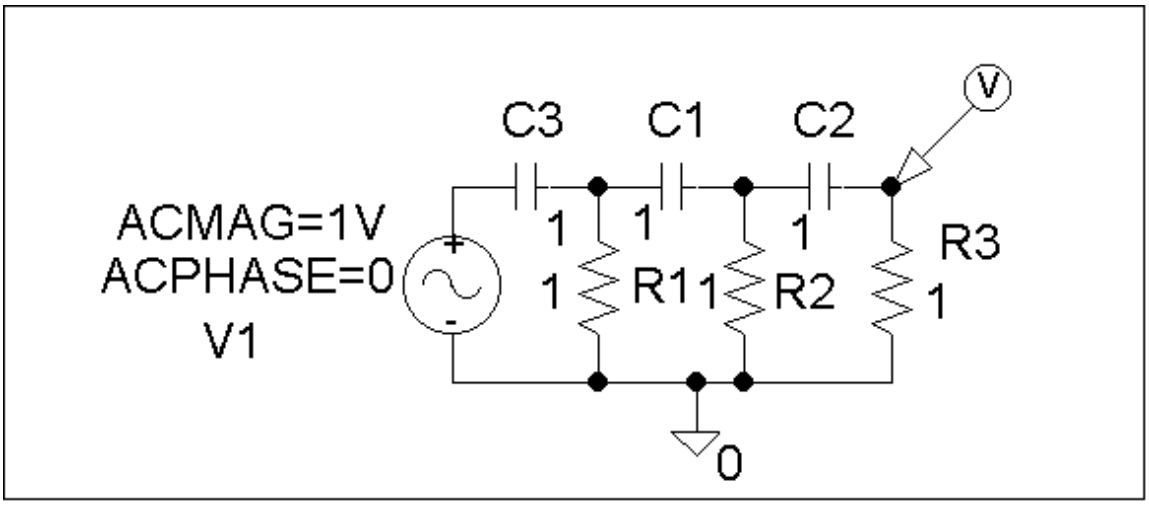

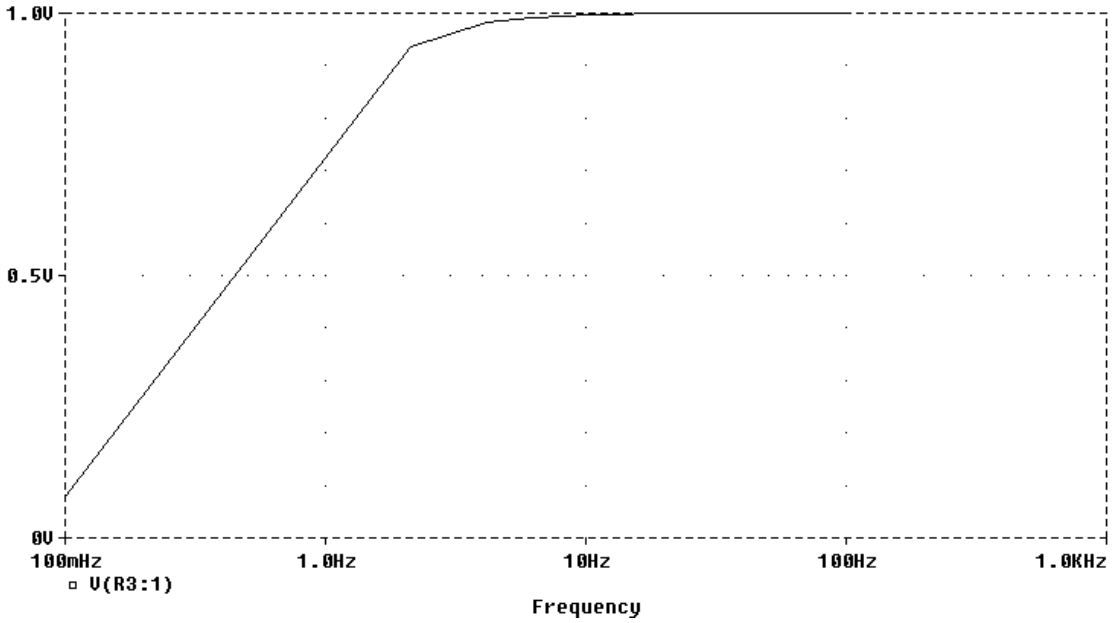

www.konkur.in

Chapter 14, Solution 88.

The schematic is shown below. We insert a voltage marker to measure V_o. In the AC Sweep box, we set Total Points = 101, Start Frequency = 1, and End Frequency = 100. After simulation, we obtain the magnitude and phase plots of V_o as shown below.

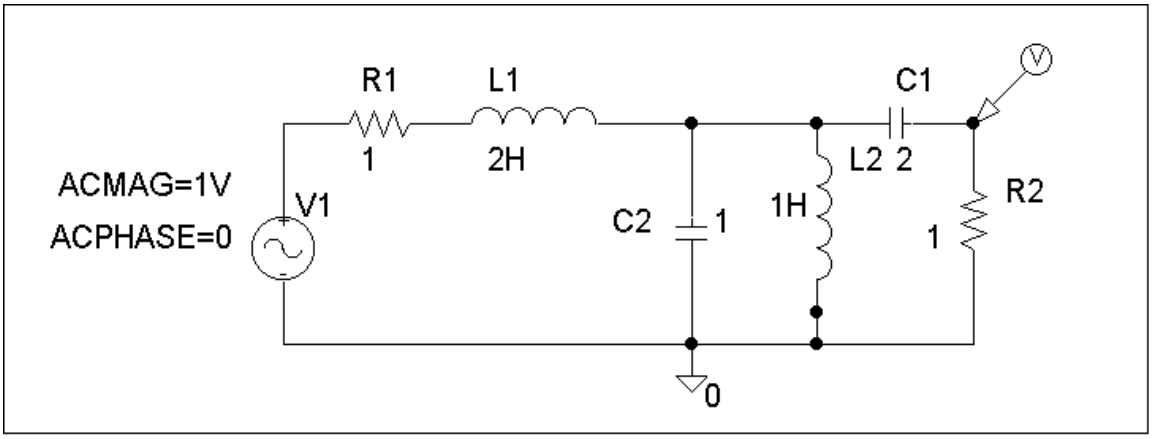

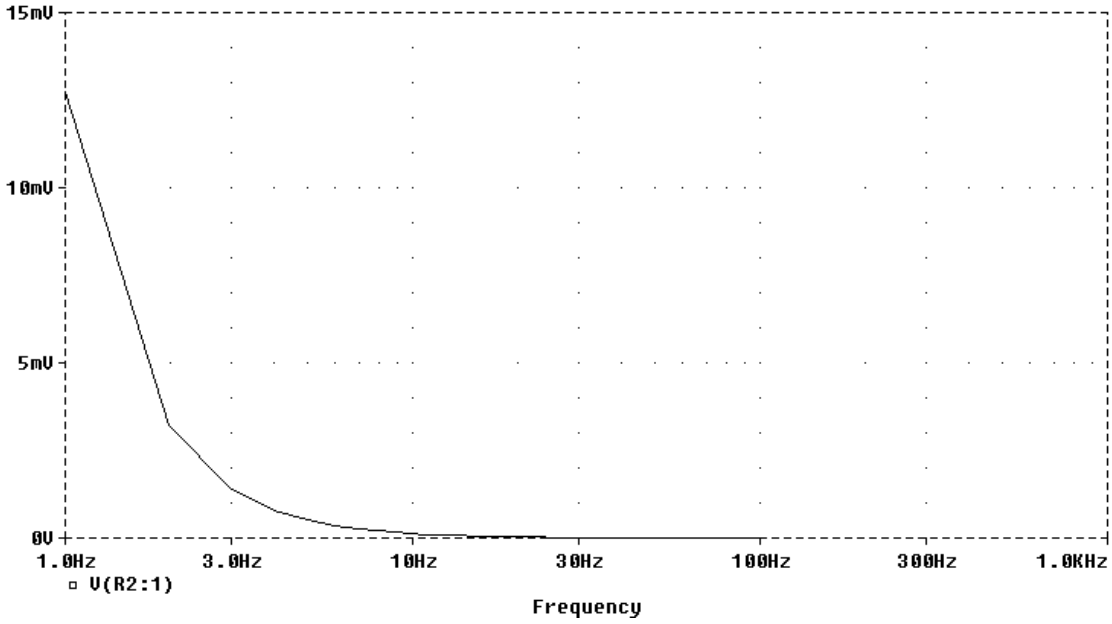

www.konkur.in

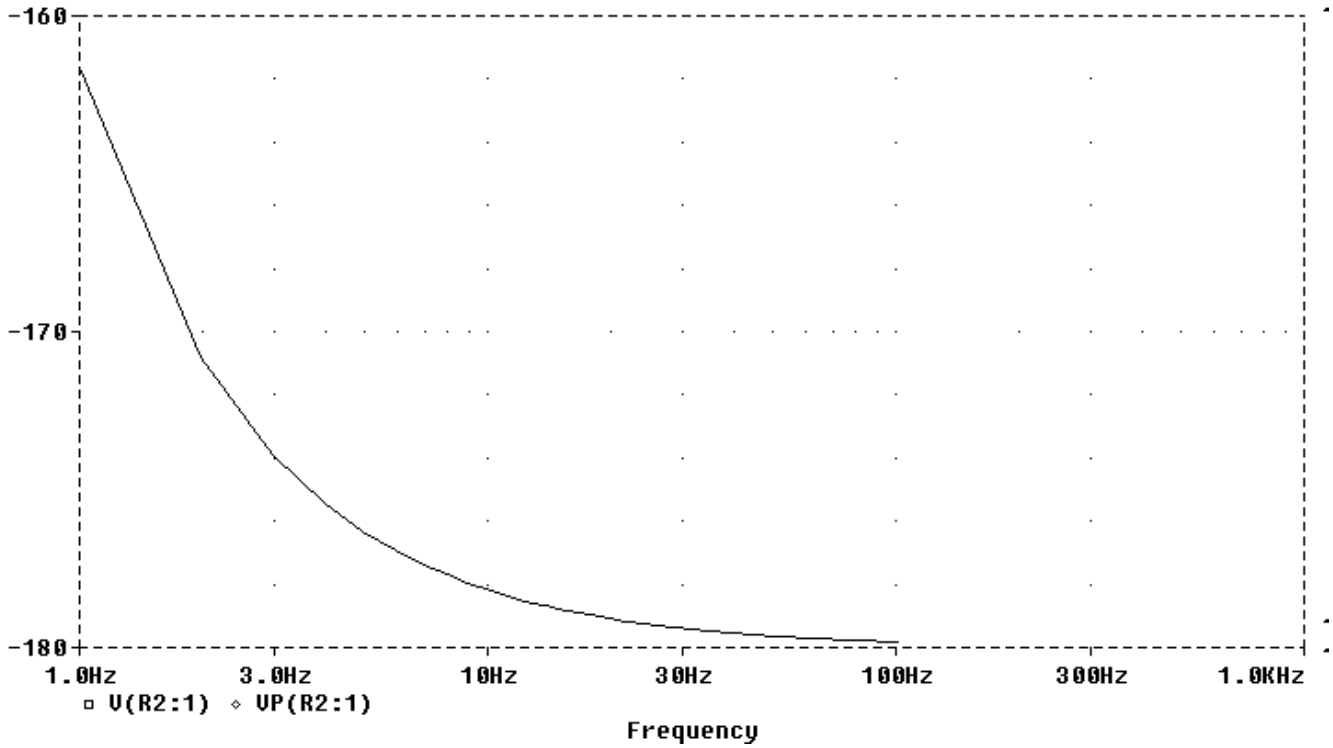

www.konkur.in

Chapter 14, Solution 89.

The schematic is shown below. In the AC Sweep box, we type Total Points = 101, Start Frequency = 100, and End Frequency = 1 k. After simulation, the magnitude plot of the response V_o is obtained as shown below.

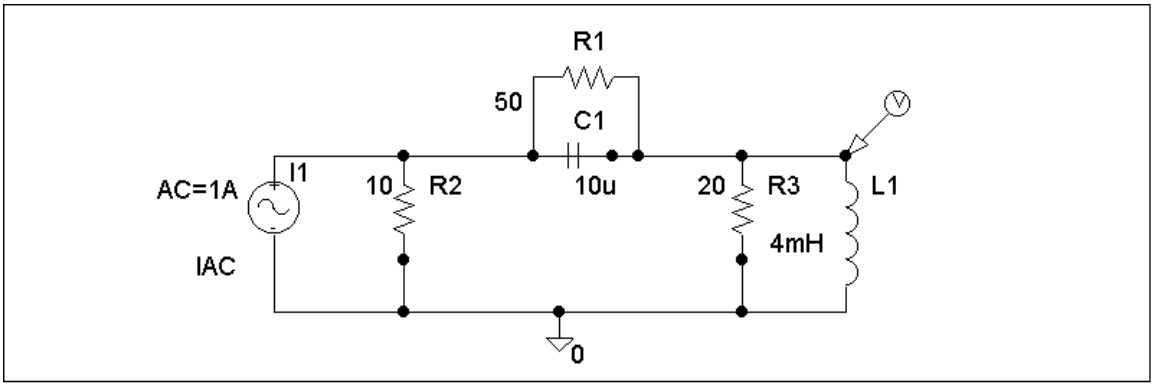

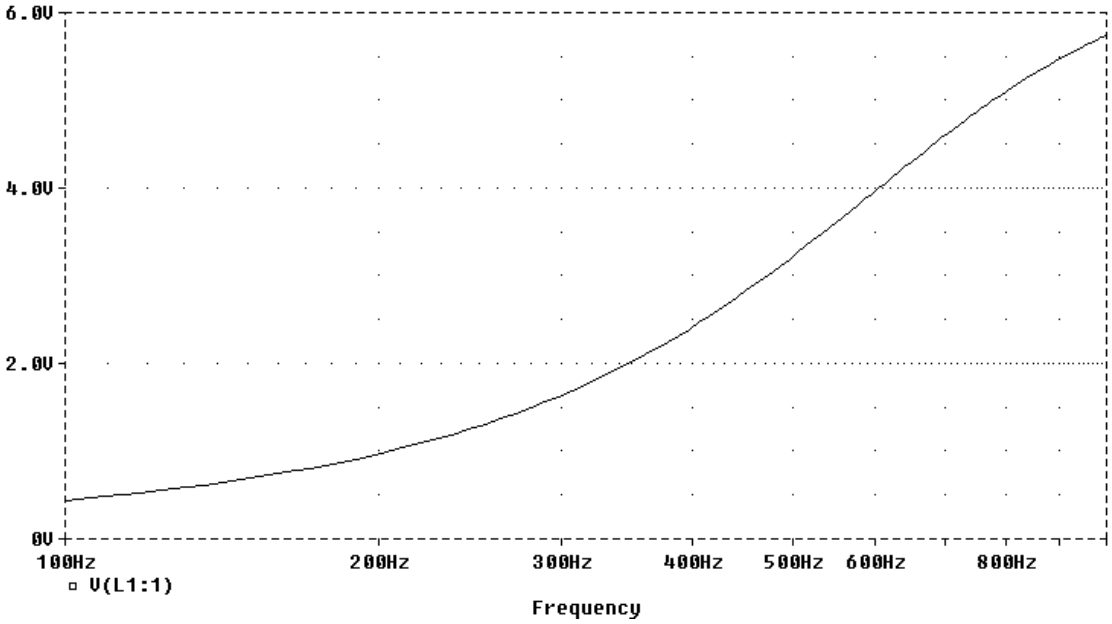

www.konkur.in

Chapter 14, Solution 90.

The schematic is shown below. In the AC Sweep box, we set Total Points = 1001, Start Frequency = 1, and End Frequency = 100k. After simulation, we obtain the magnitude plot of the response as shown below. The response shows that the circuit is a high-pass filter.

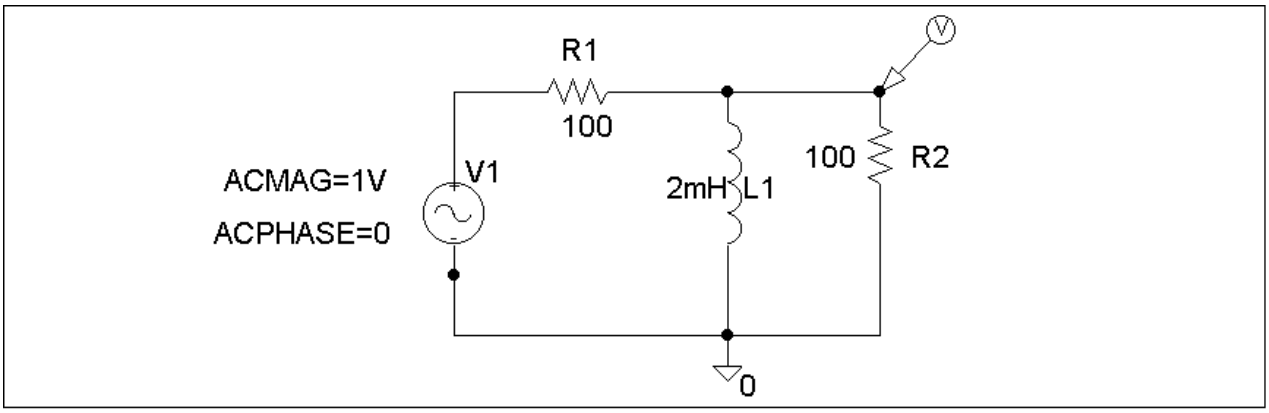

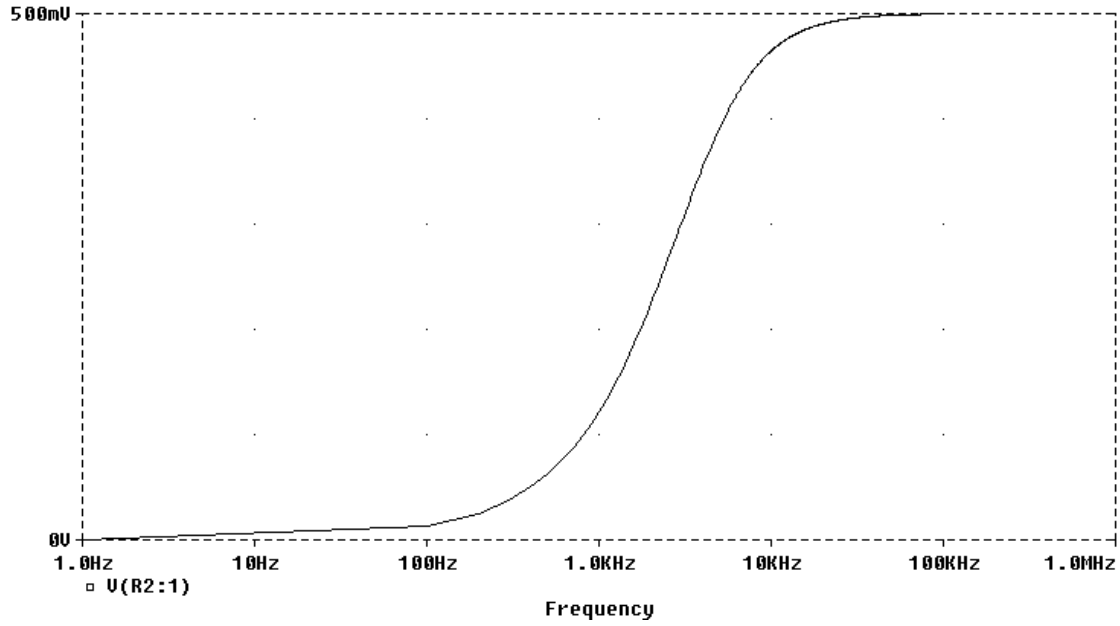

www.konkur.in

www.konkur.in

Chapter 14, Solution 91.

The schematic is shown below. In the AC Sweep box, we select Total Points = 101, Start Frequency = 10, and End Frequency = 10 k. After simulation, the magnitude plot of the frequency response is obtained. From the plot, we obtain the resonant frequency f_o is approximately equal to **800 Hz** so that $\omega_o = 2\pi f_o = 5026$ rad/s.

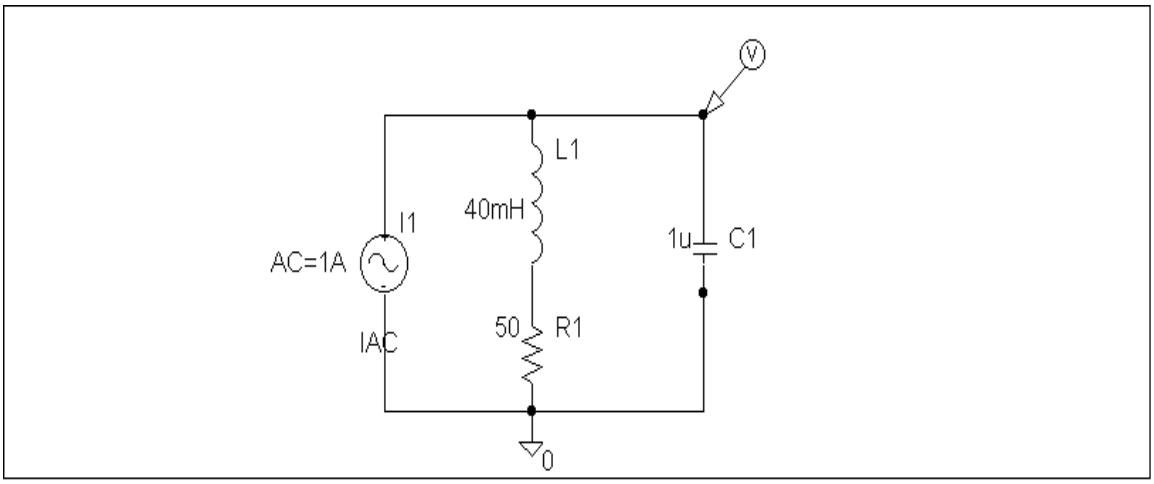

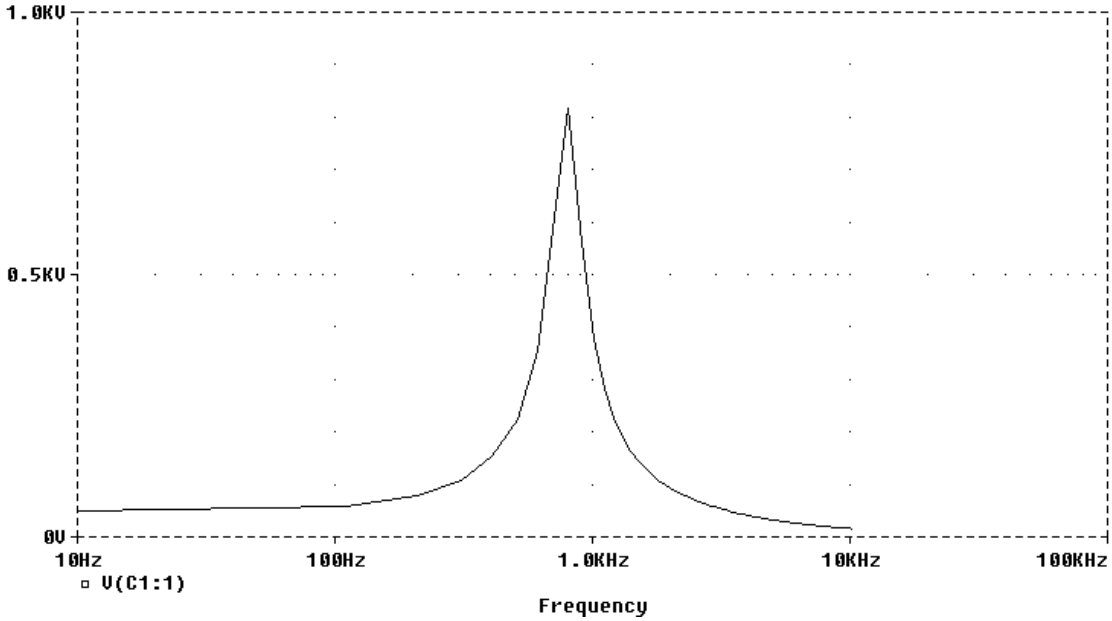

www.konkur.in

Chapter 14, Solution 92.

The schematic is shown below. We type Total Points = 101, Start Frequency = 1, and End Frequency = 100 in the AC Sweep box. After simulating the circuit, the magnitude plot of the frequency response is shown below.

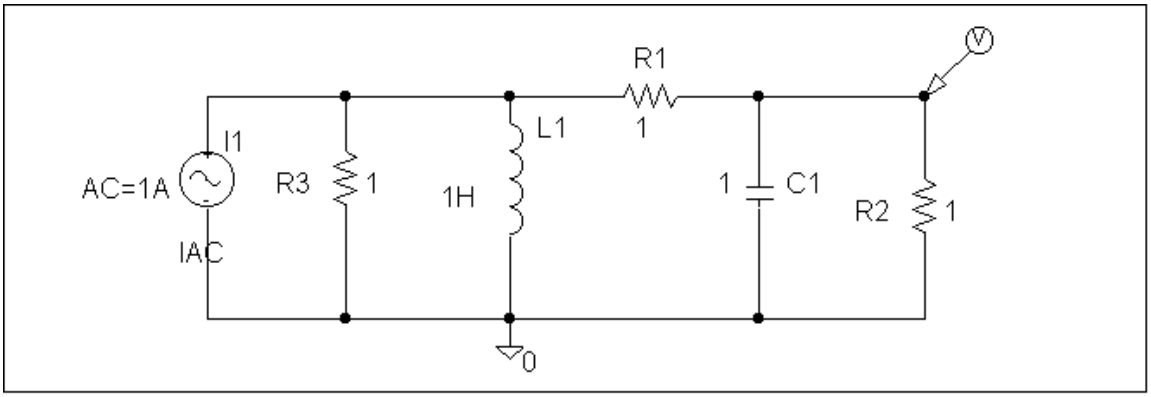

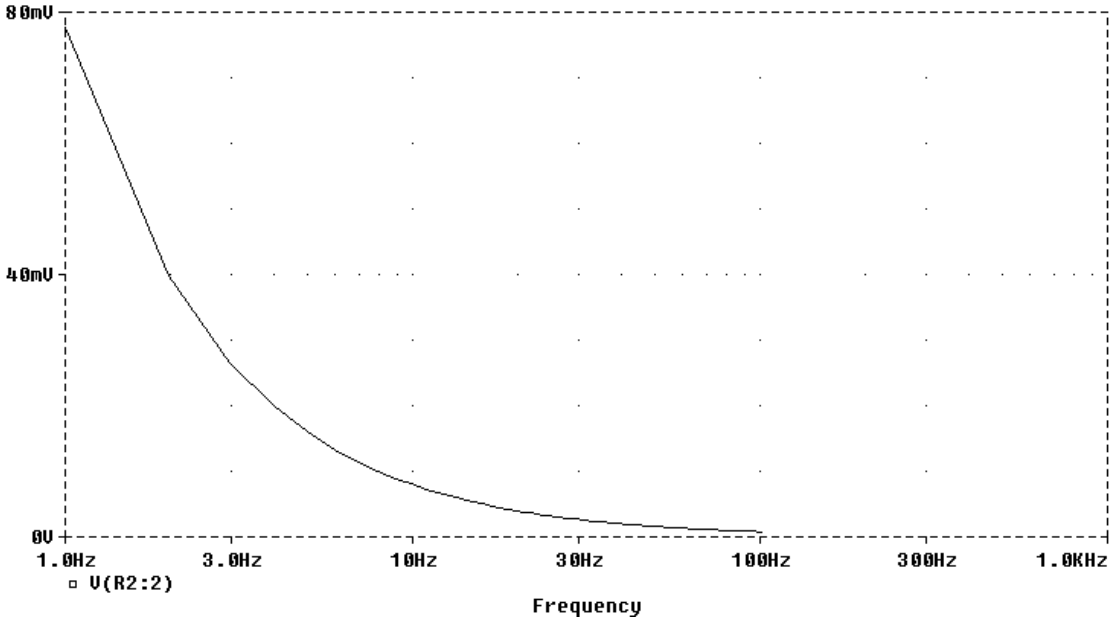

www.konkur.in

www.konkur.in

Chapter 14, Solution 93.

Consider the circuit as shown below.

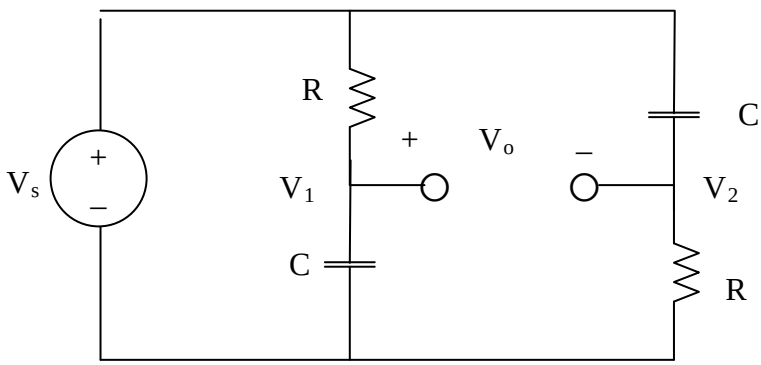

$$V_1 = \frac{\frac{1}{sC}}{R + \frac{1}{sC}} V_s = \frac{V}{1 + sRC}$$

$$V_2 = \frac{R}{R + sC} V_s = \frac{sRC}{1 + sRC} V_s$$

$$V_o = V_1 - V_2 = \frac{1 - sRC}{1 + sRC} V_s$$

Hence,

$$H(s) = \frac{V_o}{V_s} = \underline{\frac{1 - sRC}{1 + sRC}}$$

www.konkur.in

Chapter 14, Solution 94.

$$\omega_c = \frac{1}{RC}$$

We make R and C as small as possible. To achieve this, we connect 1.8 kΩ and 3.3 kΩ in parallel so that

$$R = \frac{1.8x3.3}{1.8+3.3} = 1.164\,k\Omega$$

We place the 10-pF and 30-pF capacitors in series so that

C = (10x30)/40 = 7.5 pF

Hence,

$$\boldsymbol{\omega_c = \frac{1}{RC} = \frac{1}{1.164x10^3 x7.5x10^{-12}} = \underline{114.55x10^6\ rad/s}}$$

www.konkur.in

Chapter 14, Solution 95.

(a) $$f_0 = \frac{1}{2\pi\sqrt{LC}}$$

When $C = 360\text{ pF}$,

$$f_0 = \frac{1}{2\pi\sqrt{(240\times10^{-6})(360\times10^{-12})}} = 0.541\text{ MHz}$$

When $C = 40\text{ pF}$,

$$f_0 = \frac{1}{2\pi\sqrt{(240\times10^{-6})(40\times10^{-12})}} = 1.624\text{ MHz}$$

Therefore, the frequency range is

$$\mathbf{0.541\text{ MHz} < f_0 < 1.624\text{ MHz}}$$

(b) $$Q = \frac{2\pi fL}{R}$$

At $f_0 = 0.541\text{ MHz}$,

$$Q = \frac{(2\pi)(0.541\times10^{6})(240\times10^{-6})}{12} = \mathbf{67.98}$$

At $f_0 = 1.624\text{ MHz}$,

$$Q = \frac{(2\pi)(1.624\times10^{6})(240\times10^{-6})}{12} = \mathbf{204.1}$$

www.konkur.in

Chapter 14, Solution 96.

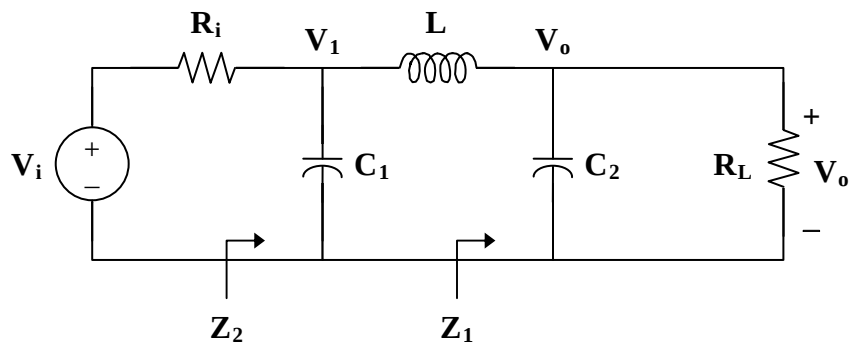

$$\mathbf{Z}_1 = R_L \parallel \frac{1}{sC_2} = \frac{R_L}{1+sR_2C_2}$$

$$\mathbf{Z}_2 = \frac{1}{sC_1} \parallel (sL + \mathbf{Z}_1) = \frac{1}{sC_1} \parallel \left(\frac{sL + R_L + s^2R_LC_2L}{1+sR_LC_2} \right)$$

$$\mathbf{Z}_2 = \frac{\frac{1}{sC_1} \cdot \frac{sL + R_L + s^2R_LC_2L}{1+sR_LC_2}}{\frac{1}{sC_1} + \frac{sL + R_L + s^2R_LC_2L}{1+sR_LC_2}}$$

$$\mathbf{Z}_2 = \frac{sL + R_L + s^2R_LLC_2}{1+sR_LC_2 + s^2LC_1 + sR_LC_1 + s^3R_LLC_1C_2}$$

$$\mathbf{V}_1 = \frac{\mathbf{Z}_2}{\mathbf{Z}_2 + R_i}\mathbf{V}_i$$

$$\mathbf{V}_o = \frac{\mathbf{Z}_1}{\mathbf{Z}_1 + sL}\mathbf{V}_1 = \frac{\mathbf{Z}_2}{\mathbf{Z}_2 + R_2} \cdot \frac{\mathbf{Z}_1}{\mathbf{Z}_1 + sL}\mathbf{V}_i$$

$$\frac{\mathbf{V}_o}{\mathbf{V}_i} = \frac{\mathbf{Z}_2}{\mathbf{Z}_2 + R_2} \cdot \frac{\mathbf{Z}_1}{\mathbf{Z}_1 + sL}$$

where

$$\frac{\mathbf{Z}_2}{\mathbf{Z}_2 + R_2} =$$

$$\frac{sL + R_L + s^2R_LLC_2}{sL + R_L + s^2R_LLC_2 + R_i + sR_iR_LC_2 + s^2R_iLC_1 + sR_iR_LC_1 + s^3R_iR_LLC_1C_2}$$

and $$\frac{\mathbf{Z}_1}{\mathbf{Z}_1 + sL} = \frac{R_L}{R_L + sL + s^2R_LLC_2}$$

www.konkur.in

Therefore,

$$\frac{\mathbf{V}_o}{\mathbf{V}_i} = \frac{\mathbf{R_L(sL + R_L + s^2R_LLC_2)}}{\mathbf{(sL + R_L + s^2R_LLC_2 + R_i + sR_iR_LC_2 + s^2R_iLC_1 + sR_iR_LC_1 + s^3R_iR_LLC_1C_2)(R_L + sL + s^2R_LLC_2)}}$$

where $s = j\omega$.

www.konkur.in

Chapter 14, Solution 97.

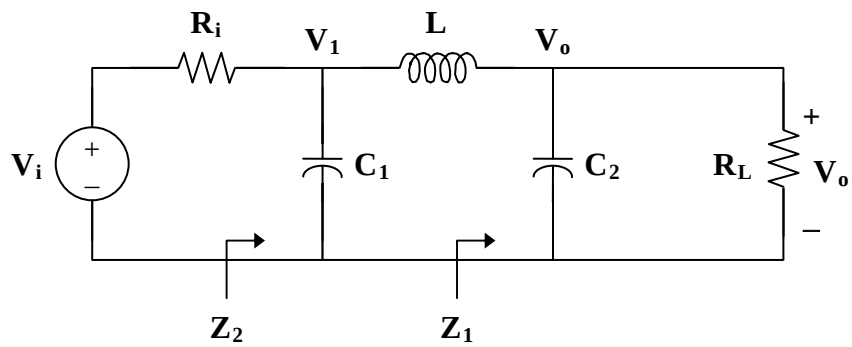

$$\mathbf{Z} = sL \,||\left(R_L + \frac{1}{sC_2}\right) = \frac{sL\,(R_L + 1/sC_2)}{R_L + sL + 1/sC_2}, \qquad s = j\omega$$

$$\mathbf{V}_1 = \frac{\mathbf{Z}}{\mathbf{Z} + R_i + 1/sC_1}\mathbf{V}_i$$

$$\mathbf{V}_o = \frac{R_L}{R_L + 1/sC_2}\mathbf{V}_1 = \frac{R_L}{R_L + 1/sC_2}\cdot\frac{\mathbf{Z}}{\mathbf{Z} + R_i + 1/sC_1}\mathbf{V}_i$$

$$\mathbf{H}(\omega) = \frac{\mathbf{V}_o}{\mathbf{V}_i} = \frac{R_L}{R_L + 1/sC_2}\cdot\frac{sL\,(R_L + 1/sC_2)}{sL\,(R_L + 1/sC_2) + (R_i + 1/sC_1)(R_L + sL + 1/sC_2)}$$

$$\mathbf{H}(\omega) = \frac{\mathbf{s^3 L R_L C_1 C_2}}{\mathbf{(sR_iC_1 + 1)(s^2LC_2 + sR_LC_2 + 1) + s^2LC_1(sR_LC_2 + 1)}}$$

where $s = j\omega$.

www.konkur.in

Chapter 14, Solution 98.

$$B = \omega_2 - \omega_1 = 2\pi(f_2 - f_1) = 2\pi(454 - 432) = 44\pi$$

$$\omega_0 = 2\pi f_0 = QB = (20)(44\pi)$$

$$f_0 = \frac{(20)(44\pi)}{2\pi} = (20)(22) = \mathbf{440\ Hz}$$

www.konkur.in

Chapter 14, Solution 99.

$$X_c = \frac{1}{\omega C} = \frac{1}{2\pi f\ C}$$

$$C = \frac{1}{2\pi f\ X_c} = \frac{1}{(2\pi)(2\times 10^6)(5\times 10^3)} = \frac{10^{-9}}{20\pi}$$

$$X_L = \omega L = 2\pi f\ L$$

$$L = \frac{X_L}{2\pi f} = \frac{300}{(2\pi)(2\times 10^6)} = \frac{3\times 10^{-4}}{4\pi}$$

$$f_0 = \frac{1}{2\pi\sqrt{LC}} = \frac{1}{2\pi\sqrt{\frac{3\times 10^{-4}}{4\pi}\cdot\frac{10^{-9}}{20\pi}}} = \mathbf{8.165\ MHz}$$

$$B = \frac{R}{L} = (100)\left(\frac{4\pi}{3\times 10^{-4}}\right) = \mathbf{4.188\times 10^6\ rad/s}$$

www.konkur.in

Chapter 14, Solution 100.

$$\omega_c = 2\pi f_c = \frac{1}{RC}$$

$$R = \frac{1}{2\pi f_c C} = \frac{1}{(2\pi)(20\times10^3)(0.5\times10^{-6})} = \mathbf{15.91\,\Omega}$$

www.konkur.in

Chapter 14, Solution 101.

$$\omega_c = 2\pi f_c = \frac{1}{RC}$$

$$R = \frac{1}{2\pi f_c C} = \frac{1}{(2\pi)(15)(10 \times 10^{-6})} = \mathbf{1.061\ k\Omega}$$

www.konkur.in

Chapter 14, Solution 102.

(a) When $R_s = 0$ and $R_L = \infty$, we have a low-pass filter.

$$\omega_c = 2\pi f_c = \frac{1}{RC}$$

$$f_c = \frac{1}{2\pi RC} = \frac{1}{(2\pi)(4\times10^3)(40\times10^{-9})} = \mathbf{994.7\ Hz}$$

(b) We obtain R_{Th} across the capacitor.

$$R_{Th} = R_L \parallel (R + R_s)$$

$$R_{Th} = 5 \parallel (4+1) = 2.5\ k\Omega$$

$$f_c = \frac{1}{2\pi R_{Th} C} = \frac{1}{(2\pi)(2.5\times10^3)(40\times10^{-9})}$$

$$f_c = \mathbf{1.59\ kHz}$$

www.konkur.in

Chapter 14, Solution 103.

$$\mathbf{H}(\omega) = \frac{\mathbf{V}_o}{\mathbf{V}_i} = \frac{R_2}{R_2 + R_1 \,||\, 1/j\omega C}, \qquad s = j\omega$$

$$\mathbf{H}(s) = \frac{R_2}{R_2 + \dfrac{R_1(1/sC)}{R_1 + 1/sC}} = \frac{R_2\,(R_1 + 1/sC)}{R_1R_2 + (R_1 + R_2)(1/sC)}$$

$$\mathbf{H}(s) = \frac{\mathbf{R_2(1 + sCR_1)}}{\mathbf{R_1 + R_2 + sCR_1R_2}}$$

www.konkur.in

Chapter 14, Solution 104.

The schematic is shown below. We click Analysis/Setup/AC Sweep and enter Total Points = 1001, Start Frequency = 100, and End Frequency = 100 k. After simulation, we obtain the magnitude plot of the response as shown.

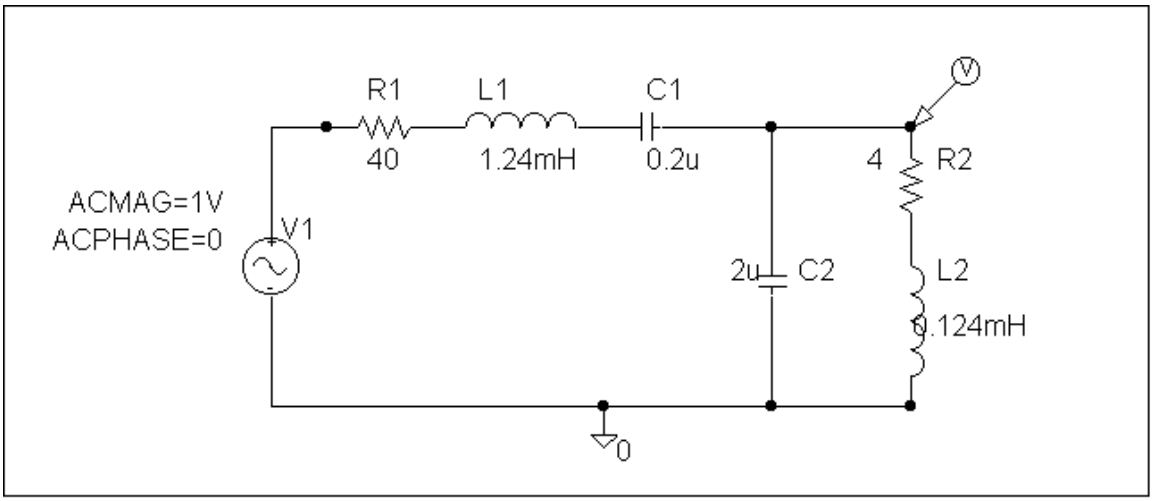

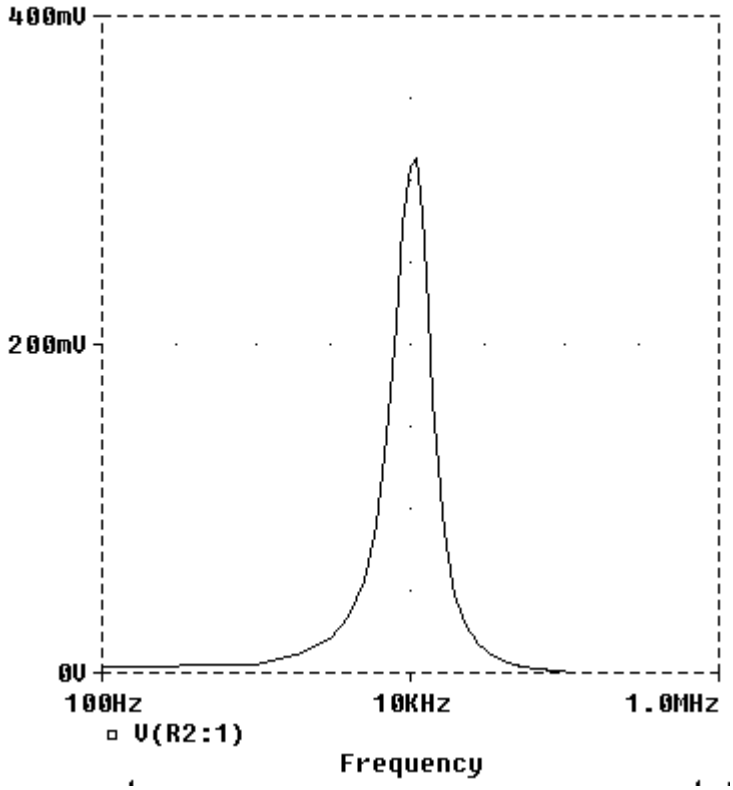

www.konkur.in

Chapter 15, Solution 1.

(a) $$\cosh(at) = \frac{e^{at} + e^{-at}}{2}$$

$$\mathcal{L}\left[\cosh(at)\right] = \frac{1}{2}\left[\frac{1}{s-a} + \frac{1}{s+a}\right] = \frac{\mathbf{s}}{\mathbf{s^2 - a^2}}$$

(b) $$\sinh(at) = \frac{e^{at} - e^{-at}}{2}$$

$$\mathcal{L}\left[\sinh(at)\right] = \frac{1}{2}\left[\frac{1}{s-a} - \frac{1}{s+a}\right] = \frac{\mathbf{a}}{\mathbf{s^2 - a^2}}$$

www.konkur.in

Chapter 15, Solution 2.

(a)

$$f(t) = \cos(\omega t)\cos(\theta) - \sin(\omega t)\sin(\theta)$$

$$F(s) = \cos(\theta)\,\mathcal{L}\left[\cos(\omega t)\right] - \sin(\theta)\,\mathcal{L}\left[\sin(\omega t)\right]$$

$$F(s) = \frac{\mathbf{s\cos(\theta) - \omega\sin(\theta)}}{\mathbf{s^2 + \omega^2}}$$

(b)

$$f(t) = \sin(\omega t)\cos(\theta) + \cos(\omega t)\sin(\theta)$$

$$F(s) = \sin(\theta)\,\mathcal{L}\left[\cos(\omega t)\right] + \cos(\theta)\,\mathcal{L}\left[\sin(\omega t)\right]$$

$$F(s) = \frac{\mathbf{s\sin(\theta) - \omega\cos(\theta)}}{\mathbf{s^2 + \omega^2}}$$

www.konkur.in

Chapter 15, Solution 3.

(a) $$\mathcal{L}\left[e^{-2t}\cos(3t)\,u(t)\right] = \frac{\mathbf{s+2}}{\mathbf{(s+2)^2+9}}$$

(b) $$\mathcal{L}\left[e^{-2t}\sin(4t)\,u(t)\right] = \frac{\mathbf{4}}{\mathbf{(s+2)^2+16}}$$

(c) Since $\mathcal{L}\left[\cosh(at)\right] = \dfrac{s}{s^2-a^2}$

$$\mathcal{L}\left[e^{-3t}\cosh(2t)\,u(t)\right] = \frac{\mathbf{s+3}}{\mathbf{(s+3)^2-4}}$$

(d) Since $\mathcal{L}\left[\sinh(at)\right] = \dfrac{a}{s^2-a^2}$

$$\mathcal{L}\left[e^{-4t}\sinh(t)\,u(t)\right] = \frac{\mathbf{1}}{\mathbf{(s+4)^2-1}}$$

(e) $$\mathcal{L}\left[e^{-t}\sin(2t)\right] = \frac{2}{(s+1)^2+4}$$

If $\quad f(t) \longleftrightarrow F(s)$

$\quad t\,f(t) \longleftrightarrow \dfrac{-d}{ds}F(s)$

Thus, $$\mathcal{L}\left[t\,e^{-t}\sin(2t)\right] = \frac{-d}{ds}\left[2\left((s+1)^2+4\right)^{-1}\right]$$

$$= \frac{2}{((s+1)^2+4)^2}\cdot 2(s+1)$$

$$\mathcal{L}\left[t\,e^{-t}\sin(2t)\right] = \frac{\mathbf{4(s+1)}}{\mathbf{((s+1)^2+4)^2}}$$

www.konkur.in

Chapter 15, Solution 4.

Design a problem to help other students better understand how to find the Laplace transform of different time varying functions.

Although there are many ways to solve this problem, this is an example based on the same kind of problem asked in the third edition.

Problem

Find the Laplace transforms of the following:

(a) $g(t) = 6\cos(4t - 1)$
(b) $f(t) = 2tu(t) + 5e^{-3(t-2)}u(t - 2)$

Solution

(a) $$\mathbf{G(s) = 6\frac{s}{s^2 + 4^2}e^{-s} = \underline{\frac{6se^{-s}}{s^2 + 16}}}$$

(b) $$\mathbf{F(s) = \underline{\frac{2}{s^2} + 5\frac{e^{-2s}}{s + 3}}}$$

www.konkur.in

Chapter 15, Solution 5.

(a) $$\mathcal{L}\left[\cos(2t+30°)\right] = \frac{s\cos(30°) - 2\sin(30°)}{s^2+4}$$

$$\mathcal{L}\left[t^2\cos(2t+30°)\right] = \frac{d^2}{ds^2}\left[\frac{s\cos(30°)-1}{s^2+4}\right]$$

$$= \frac{d}{ds}\frac{d}{ds}\left[\left(\frac{\sqrt{3}}{2}s-1\right)\left(s^2+4\right)^{-1}\right]$$

$$= \frac{d}{ds}\left[\frac{\sqrt{3}}{2}\left(s^2+4\right)^{-1} - 2s\left(\frac{\sqrt{3}}{2}s-1\right)\left(s^2+4\right)^{-2}\right]$$

$$= \frac{\frac{\sqrt{3}}{2}(-2s)}{\left(s^2+4\right)^2} - \frac{2\left(\frac{\sqrt{3}}{2}s-1\right)}{\left(s^2+4\right)^2} - \frac{2s\left(\frac{\sqrt{3}}{2}\right)}{\left(s^2+4\right)^2} + \frac{(8s^2)\left(\frac{\sqrt{3}}{2}s-1\right)}{\left(s^2+4\right)^3}$$

$$= \frac{-\sqrt{3}s - \sqrt{3}s + 2 - \sqrt{3}s}{\left(s^2+4\right)^2} + \frac{(8s^2)\left(\frac{\sqrt{3}}{2}s-1\right)}{\left(s^2+4\right)^3}$$

$$= \frac{(-3\sqrt{3}s+2)(s^2+4)}{\left(s^2+4\right)^3} + \frac{4\sqrt{3}s^3 - 8s^2}{\left(s^2+4\right)^3}$$

$$\mathcal{L}\left[t^2\cos(2t+30°)\right] = \mathbf{\frac{8-12\sqrt{3}s-6s^2+\sqrt{3}s^3}{\left(s^2+4\right)^3}}$$

(b) $$\mathcal{L}\left[3t^4 e^{-2t}\right] = 3\cdot\frac{4!}{(s+2)^5} = \mathbf{\frac{72}{(s+2)^5}}$$

(c) $$\mathcal{L}\left[2t\,u(t) - 4\frac{d}{dt}\delta(t)\right] = \frac{2}{s^2} - 4(s\cdot 1 - 0) = \mathbf{\frac{2}{s^2} - 4s}$$

(d) $$2e^{-(t-1)}u(t) = 2e^{-t}u(t)$$

$$\mathcal{L}\left[2e^{-(t-1)}u(t)\right] = \mathbf{\frac{2e}{s+1}}$$

(e) Using the scaling property,

$$\mathcal{L}\left[5u(t/2)\right] = 5\cdot\frac{1}{1/2}\cdot\frac{1}{s/(1/2)} = 5\cdot 2\cdot\frac{1}{2s} = \mathbf{\frac{5}{s}}$$

(f) $$\mathcal{L}\left[6e^{-t/3}u(t)\right] = \frac{6}{s+1/3} = \mathbf{\frac{18}{3s+1}}$$

www.konkur.in

(g) Let $f(t) = \delta(t)$. Then, $F(s) = 1$.

$$L\left[\frac{d^n}{dt^n}\delta(t)\right] = L\left[\frac{d^n}{dt^n}f(t)\right] = s^n F(s) - s^{n-1} f(0) - s^{n-2} f'(0) - \cdots$$

$$L\left[\frac{d^n}{dt^n}\delta(t)\right] = L\left[\frac{d^n}{dt^n}f(t)\right] = s^n \cdot 1 - s^{n-1} \cdot 0 - s^{n-2} \cdot 0 - \cdots$$

$$L\left[\frac{d^n}{dt^n}\delta(t)\right] = \mathbf{s^n}$$

www.konkur.in

Chapter 15, Solution 6.

$f(t) = 5t[u(t)–u(t–1)] – 5t[u(t–1)–u(t–2)] = 5[tu(t)–tu(t–1) – tu(t–1) + tu(t–2)]$
$= 5[tu(t) – 2tu(t–1) + tu(t–2)]$
$= 5[tu(t) – 2(t–1)u(t–1) – 2u(t–1) + (t–2)u(t–2) + 2u(t–2)]$ which leads to

$F(s) =5[(1/s^2) – (1/s^2)e^{–s} – (2/s)e^{–s} + (1/s^2)e^{–2s} + (2/s)e^{–2s}]$

www.konkur.in

Chapter 15, Solution 7.

(a) $F(s) = \underline{\frac{2}{s^2} + \frac{4}{s}}$

(b) $G(s) = \underline{\frac{4}{s} + \frac{3}{s+2}}$

(c) $\mathbf{H(s) = 6\frac{3}{s^2+9} + 8\frac{s}{s^2+9} = \underline{\frac{8s+18}{s^2+9}}}$

(d) From Problem 15.1,

$$L\{\cosh at\} = \frac{s}{s^2 - a^2}$$

$$X(s) = \frac{s+2}{(s+2)^2 - 4^2} = \underline{\frac{s+2}{s^2+4s-12}}$$

$$\mathbf{(a)\ \frac{2}{s^2} + \frac{4}{s}, (b)\frac{4}{s} + \frac{3}{s+2}, (c)\frac{8s+18}{s^2+9}, (d)\frac{s+2}{s^2+4s-12}}$$

www.konkur.in

Chapter 15, Solution 8.

(a) 2t=2(t-4) + 8

f(t) = 2tu(t-4) = 2(t-4)u(t-4) + 8u(t-4)

$$F(s) = \frac{2}{s^2}e^{-4s} + \frac{8}{s}e^{-4s} = \underline{\left(\frac{2}{s^2} + \frac{8}{s}\right)e^{-4s}}$$

(b) $$F(s) = \int_0^\infty f(t)e^{-st}dt = \int_0^\infty 5\cos t\,\delta(t-2)e^{-st}dt = 5\cos t e^{-st}\Big|_{t=2} = \underline{\mathbf{5\cos(2)e^{-2s}}}$$

(c) $$e^{-t} = e^{-(t-\tau)}e^{-\tau}$$

$$f(t) = e^{-\tau}e^{-(t-\tau)}u(t-\tau)$$

$$F(s) = e^{-\tau}e^{-\tau s}\frac{1}{s+1} = \underline{\frac{e^{-\tau(s+1)}}{s+1}}$$

(d) $$\sin 2t = \sin[2(t-\tau) + 2\tau] = \sin 2(t-\tau)\cos 2\tau + \cos 2(t-\tau)\sin 2\tau$$

$$f(t) = \cos 2\tau \sin 2(t-\tau)u(t-\tau) + \sin 2\tau \cos 2(t-\tau)u(t-\tau)$$

$$F(s) = \underline{\cos 2\tau e^{-\tau s}\frac{2}{s^2+4} + \sin 2\tau e^{-\tau s}\frac{s}{s^2+4}}$$

www.konkur.in

Chapter 15, Solution 9.

(a) $f(t) = (t-4)\,u(t-2) = (t-2)\,u(t-2) - 2\,u(t-2)$

$$F(s) = \frac{\mathbf{e^{-2s}}}{\mathbf{s^2}} - \frac{\mathbf{2\,e^{-2s}}}{\mathbf{s^2}}$$

(b) $g(t) = 2\,e^{-4t}\,u(t-1) = 2\,e^{-4}\,e^{-4(t-1)}\,u(t-1)$

$$G(s) = \frac{\mathbf{2\,e^{-s}}}{\mathbf{e^4\,(s+4)}}$$

(c) $h(t) = 5\cos(2t-1)\,u(t)$

$$\cos(A-B) = \cos(A)\cos(B) + \sin(A)\sin(B)$$
$$\cos(2t-1) = \cos(2t)\cos(1) + \sin(2t)\sin(1)$$

$$h(t) = 5\cos(1)\cos(2t)\,u(t) + 5\sin(1)\sin(2t)\,u(t)$$

$$H(s) = 5\cos(1)\cdot\frac{s}{s^2+4} + 5\sin(1)\cdot\frac{2}{s^2+4}$$

$$H(s) = \frac{\mathbf{2.702\,s}}{\mathbf{s^2+4}} + \frac{\mathbf{8.415}}{\mathbf{s^2+4}}$$

(d) $p(t) = 6u(t-2) - 6u(t-4)$

$$P(s) = \frac{\mathbf{6}}{\mathbf{s}}\mathbf{e^{-2s}} - \frac{\mathbf{6}}{\mathbf{s}}\mathbf{e^{-4s}}$$

www.konkur.in

Chapter 15, Solution 10.

(a) By taking the derivative in the time domain,

$$g(t) = (-t\,e^{-t} + e^{-t})\cos(t) - t\,e^{-t}\sin(t)$$
$$g(t) = e^{-t}\cos(t) - t\,e^{-t}\cos(t) - t\,e^{-t}\sin(t)$$

$$G(s) = \frac{s+1}{(s+1)^2+1} + \frac{d}{ds}\left[\frac{s+1}{(s+1)^2+1}\right] + \frac{d}{ds}\left[\frac{1}{(s+1)^2+1}\right]$$

$$G(s) = \frac{s+1}{s^2+2s+2} - \frac{s^2+2s}{(s^2+2s+2)^2} - \frac{2s+2}{(s^2+2s+2)^2} =$$

$$\mathbf{\frac{s^2(s+2)}{(s^2+2s+2)^2}}$$

(b) By applying the time differentiation property,

$$G(s) = sF(s) - f(0)$$

where $f(t) = t\,e^{-t}\cos(t)$, $f(0) = 0$

$$G(s) = (s)\cdot\frac{-d}{ds}\left[\frac{s+1}{(s+1)^2+1}\right] = \frac{(s)(s^2+2s)}{(s^2+2s+2)^2} =$$

$$\mathbf{\frac{s^2(s+2)}{(s^2+2s+2)^2}}$$

www.konkur.in

Chapter 15, Solution 11.

(a) Since $\mathcal{L}\left[\cosh(at)\right] = \dfrac{s}{s^2 - a^2}$

$$F(s) = \frac{6(s+1)}{(s+1)^2 - 4} = \mathbf{\frac{6(s+1)}{s^2 + 2s - 3}}$$

(b) Since $\mathcal{L}\left[\sinh(at)\right] = \dfrac{a}{s^2 - a^2}$

$$\mathcal{L}\left[3e^{-2t}\sinh(4t)\right] = \frac{(3)(4)}{(s+2)^2 - 16} = \frac{12}{s^2 + 4s - 12}$$

$$F(s) = \mathcal{L}\left[t \cdot 3e^{-2t}\sinh(4t)\right] = \frac{-d}{ds}\left[12(s^2 + 4s - 12)^{-1}\right]$$

$$F(s) = (12)(2s+4)(s^2 + 4s - 12)^{-2} = \mathbf{\frac{24(s+2)}{(s^2 + 4s - 12)^2}}$$

(c) $\cosh(t) = \dfrac{1}{2} \cdot (e^t + e^{-t})$

$$f(t) = 8e^{-3t} \cdot \frac{1}{2} \cdot (e^t + e^{-t})\,u(t-2)$$

$$= 4e^{-2t}\,u(t-2) + 4e^{-4t}\,u(t-2)$$

$$= 4e^{-4}\,e^{-2(t-2)}\,u(t-2) + 4e^{-8}\,e^{-4(t-2)}\,u(t-2)$$

$$\mathcal{L}\left[4e^{-4}\,e^{-2(t-2)}\,u(t-2)\right] = 4e^{-4}\,e^{-2s} \cdot \mathcal{L}\left[e^{-2}\,u(t)\right]$$

$$\mathcal{L}\left[4e^{-4}\,e^{-2(t-2)}\,u(t-2)\right] = \frac{4e^{-(2s+4)}}{s+2}$$

Similarly, $\mathcal{L}\left[4e^{-8}\,e^{-4(t-2)}\,u(t-2)\right] = \dfrac{4e^{-(2s+8)}}{s+4}$

Therefore,

$$F(s) = \frac{4e^{-(2s+4)}}{s+2} + \frac{4e^{-(2s+8)}}{s+4} = \mathbf{\frac{e^{-(2s+6)}\left[(4e^2 + 4e^{-2})s + (16e^2 + 8e^{-2})\right]}{s^2 + 6s + 8}}$$

www.konkur.in

Chapter 15, Solution 12.

$$G(s) = \frac{s+2}{(s+2)^2 + 4^2} = \underline{\frac{s+2}{s^2 + 4s + 20}}$$

www.konkur.in

Chapter 15, Solution 13.

(a) $tf(t) \longleftrightarrow -\frac{d}{ds}F(s)$

If f(t) = cost, then $F(s) = \frac{s}{s^2+1}$ and $-\frac{d}{ds}F(s) = -\frac{(s^2+1)(1)-s(2s)}{(s^2+1)^2}$

$$\underline{\mathcal{L}(t\cos t) = \frac{s^2-1}{(s^2+1)^2}}$$

(b) Let f(t) = e^{-t} sin t.

$$F(s) = \frac{1}{(s+1)^2+1} = \frac{1}{s^2+2s+2}$$

$$\frac{dF}{ds} = \frac{(s^2+2s+2)(0)-(1)(2s+2)}{(s^2+2s+2)^2}$$

$$\underline{\mathcal{L}(e^{-t}t\sin t) = -\frac{dF}{ds} = \frac{2(s+1)}{(s^2+2s+2)^2}}$$

(c) $\frac{f(t)}{t} \longleftrightarrow \int_s^\infty F(s)ds$

Let $f(t) = \sin\beta t$, then $F(s) = \frac{\beta}{s^2+\beta^2}$

$$\mathcal{L}\left[\frac{\sin\beta t}{t}\right] = \int_s^\infty \frac{\beta}{s^2+\beta^2}ds = \beta\frac{1}{\beta}\tan^{-1}\frac{s}{\beta}\Big|_s^\infty = \frac{\pi}{2} - \tan^{-1}\frac{s}{\beta} = \underline{\tan^{-1}\frac{\beta}{s}}$$

www.konkur.in

Chapter 15, Solution 14.

Taking the derivative of f(t) twice, we obtain the figures below.

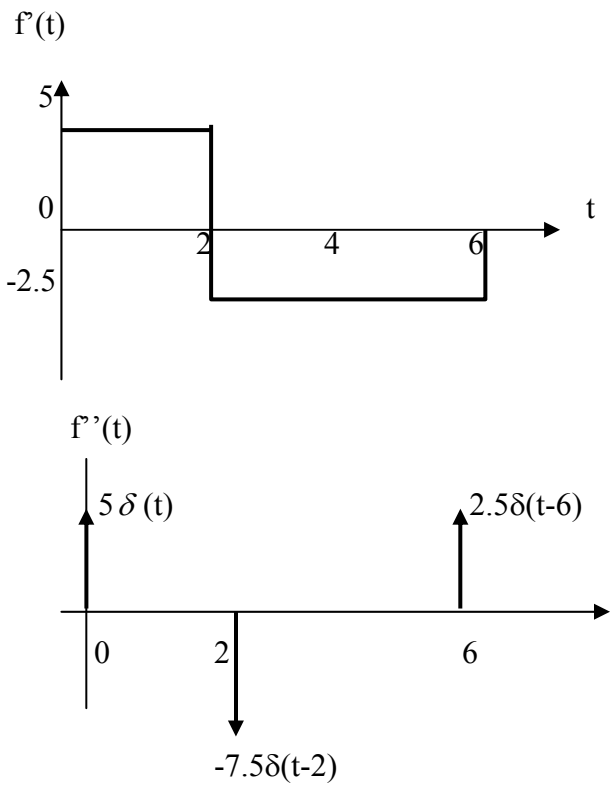

$$f'' = 5\delta(t) - 7.5\delta(t-2) + 2.5\delta(t-6)$$

Taking the Laplace transform of each term,

$$s^2F(s) = 5 - 7.5e^{-2s} + 2.5e^{-6s} \text{ or } \mathbf{F(s) = \frac{5}{s} - 7.5\frac{e^{-2s}}{s^2} + 2.5\frac{e^{-6s}}{s^2}}$$

Please note that we can obtain the same answer by representing the function as,

$$f(t) = 5tu(t) - 7.5u(t-2) + 2.5u(t-6).$$

www.konkur.in

Chapter 15, Solution 15.

This is a periodic function with T=3.

$$F(s) = \frac{F_1(s)}{1-e^{-3s}}$$

To get $F_1(s)$, we consider f(t) over one period.

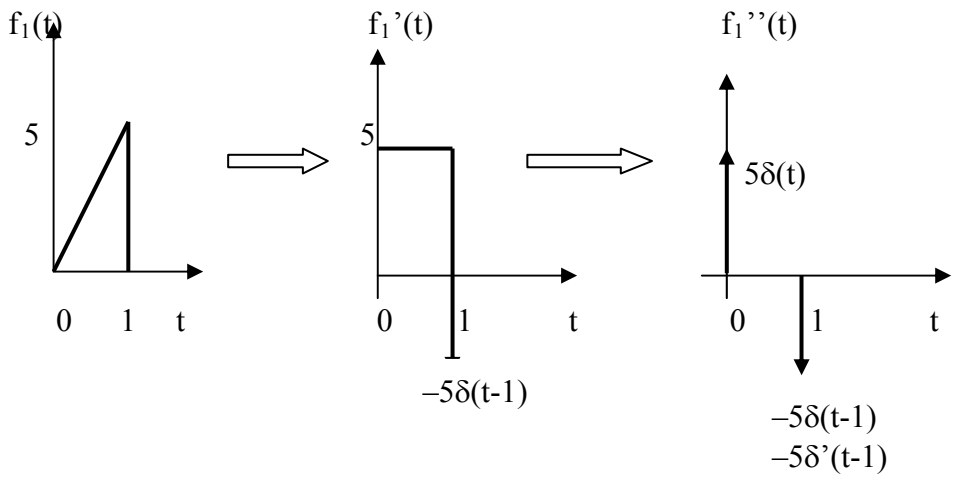

$$f_1'' = 5\delta(t) - 5\delta(t-1) - 5\delta'(t-1)$$

Taking the Laplace transform of each term,

$$s^2F_1(s) = 5 - 5e^{-s} - 5se^{-s} \quad \text{or} \quad F_1(s) = 5(1 - e^{-s} - se^{-s})/s^2$$

Hence,

$$F(s) = \underline{\mathbf{5\frac{1-e^{-s}-se^{-s}}{s^2(1-e^{-3s})}}}$$

Alternatively, we can obtain the same answer by noting that $f_1(t) = 5tu(t) - 5tu(t-1) - 5u(t-1)$.

www.konkur.in

Chapter 15, Solution 16.

$$f(t) = 5u(t) - 3u(t-1) + 3u(t-3) - 5u(t-4)$$

$$F(s) = \frac{1}{s}\left[5 - 3e^{-s} + 3e^{-3s} - 5e^{-4s}\right]$$

www.konkur.in

Chapter 15, Solution 17.

Using Fig. 15.29, design a problem to help other students to better understand the Laplace transform of a simple, non-periodic waveshape.

Although there are many ways to solve this problem, this is an example based on the same kind of problem asked in the third edition.

Problem

Find the Laplace transform of f(t) shown in Fig. 15.29.

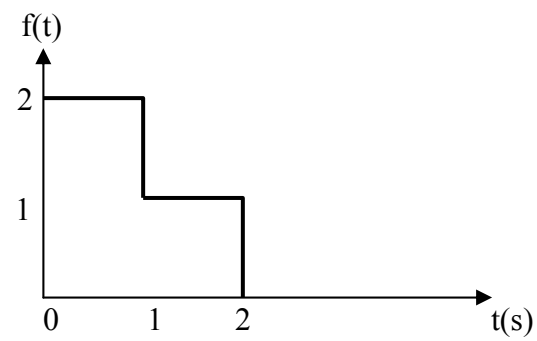

Figure 15.29 For Prob. 15.17.

Solution

Taking the derivative of f(t) gives f'(t) as shown below.

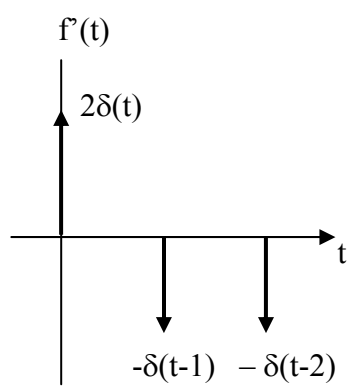

$$f'(t) = 2\delta(t) - \delta(t-1) - \delta(t-2)$$

Taking the Laplace transform of each term,

$$sF(s) = 2 - e^{-s} - e^{-2s} \quad \text{which leads to}$$

$$F(s) = \mathbf{[2 - e^{-s} - e^{-2s}]/s}$$

We can also obtain the same answer noting that $f(t) = 2u(t) - u(t-1) - u(t-2)$.

www.konkur.in

Chapter 15, Solution 18.

(a) $$g(t) = u(t) - u(t-1) + 2\left[u(t-1) - u(t-2)\right] + 3\left[u(t-2) - u(t-3)\right]$$
$$= u(t) + u(t-1) + u(t-2) - 3u(t-3)$$

$$G(s) = \frac{\mathbf{1}}{\mathbf{s}}\mathbf{(1 + e^{-s} + e^{-2s} - 3e^{-3s})}$$

(b) $$h(t) = 2t\left[u(t) - u(t-1)\right] + 2\left[u(t-1) - u(t-3)\right]$$
$$+ (8 - 2t)\left[u(t-3) - u(t-4)\right]$$

$$= 2t\,u(t) - 2(t-1)u(t-1) - 2u(t-1) + 2u(t-1) - 2u(t-3)$$
$$- 2(t-3)u(t-3) + 2u(t-3) + 2(t-4)u(t-4)$$

$$= 2t\,u(t) - 2(t-1)u(t-1) - 2(t-3)u(t-3) + 2(t-4)u(t-4)$$

$$H(s) = \frac{2}{s^2}(1 - e^{-s}) - \frac{2}{s^2}e^{-3s} + \frac{2}{s^2}e^{-4s} = \frac{\mathbf{2}}{\mathbf{s^2}}\mathbf{(1 - e^{-s} - e^{-3s} + e^{-4s})}$$

www.konkur.in

Chapter 15, Solution 19.

Since $L\lfloor \delta(t) \rfloor = 1$ and $T = 2$, $F(s) = \dfrac{\mathbf{1}}{\mathbf{1 - e^{-2s}}}$

www.konkur.in

Chapter 15, Solution 20.

Using Fig. 15.32, design a problem to help other students to better understand the Laplace transform of a simple, periodic waveshape.

Although there are many ways to solve this problem, this is an example based on the same kind of problem asked in the third edition.

Problem

The periodic function shown in Fig. 15.32 is defined over its period as

$$g(t) = \begin{cases} \sin \pi t, & 0 < t < 1 \\ 0, & 1 < t < 2 \end{cases}$$

Find $G(s)$.

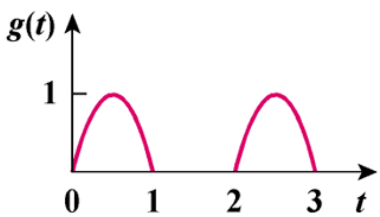

Figure 15.32

Solution

Let $\quad g_1(t) = \sin(\pi t), \quad 0 < t < 1$

$$= \sin(\pi t)\left[u(t) - u(t-1)\right] \; 0 < t < 2$$

$$= \sin(\pi t)\,u(t) - \sin(\pi t)\,u(t-1)$$

Note that $\sin(\pi(t-1)) = \sin(\pi t - \pi) = -\sin(\pi t)$.

So, $\quad g_1(t) = \sin(\pi t)\,u(t) + \sin(\pi(t-1))\,u(t-1)$

$$G_1(s) = \frac{\pi}{s^2 + \pi^2}(1 + e^{-s})$$

$$G(s) = \frac{G_1(s)}{1 - e^{-2s}} = \frac{\boldsymbol{\pi(1 + e^{-s})}}{\boldsymbol{(s^2 + \pi^2)(1 - e^{-2s})}}$$

www.konkur.in

Chapter 15, Solution 21.

$$T = 2\pi$$

Let $$f_1(t) = \left(1 - \frac{t}{2\pi}\right)\left[u(t) - u(t - 2\pi)\right]$$

$$f_1(t) = u(t) - \frac{t}{2\pi}u(t) + \frac{1}{2\pi}(t - 2\pi)u(t - 2\pi)$$

$$F_1(s) = \frac{1}{s} - \frac{1}{2\pi s^2} + \frac{e^{-2\pi s}}{2\pi s^2} = \frac{2\pi s + \left[-1 + e^{-2\pi s}\right]}{2\pi s^2}$$

$$F(s) = \frac{F_1(s)}{1 - e^{-Ts}} = \frac{\mathbf{2\pi s - 1 + e^{-2\pi s}}}{\mathbf{2\pi s^2\,(1 - e^{-2\pi s})}}$$

www.konkur.in

Chapter 15, Solution 22.

(a) Let $g_1(t) = 2t, \quad 0 < t < 1$

$$= 2t\left[u(t) - u(t-1)\right]$$
$$= 2t\,u(t) - 2(t-1)\,u(t-1) + 2\,u(t-1)$$

$$G_1(s) = \frac{2}{s^2} - \frac{2e^{-s}}{s^2} + \frac{2}{s}e^{-s}$$

$$G(s) = \frac{G_1(s)}{1 - e^{-sT}}, \quad T = 1$$

$$G(s) = \frac{\mathbf{2(1 - e^{-s} + s\,e^{-s})}}{\mathbf{s^2\,(1 - e^{-s})}}$$

(b) Let $h = h_0 + u(t)$, where h_0 is the periodic triangular wave.

Let h_1 be h_0 within its first period, i.e.

$$h_1(t) = \begin{cases} 2t & 0 < t < 1 \\ 4 - 2t & 1 < t < 2 \end{cases}$$

$$h_1(t) = 2t\,u(t) - 2t\,u(t-1) + 4u(t-1) - 2t\,u(t-1) - 2(t-2)\,u(t-2)$$
$$h_1(t) = 2t\,u(t) - 4(t-1)\,u(t-1) - 2(t-2)\,u(t-2)$$

$$H_1(s) = \frac{2}{s^2} - \frac{4}{s^2}e^{-s} - \frac{2e^{-2s}}{s^2} = \frac{2}{s^2}(1 - e^{-s})^2$$

$$H_0(s) = \frac{2}{s^2}\frac{(1 - e^{-s})^2}{(1 - e^{-2s})}$$

$$H(s) = \frac{\mathbf{1}}{\mathbf{s}} + \frac{\mathbf{2}}{\mathbf{s^2}}\frac{\mathbf{(1 - e^{-s})^2}}{\mathbf{(1 - e^{-2s})}}$$

www.konkur.in

Chapter 15, Solution 23.

(a) Let $f_1(t) = \begin{cases} 1 & 0 < t < 1 \\ -1 & 1 < t < 2 \end{cases}$

$$f_1(t) = \lfloor u(t) - u(t-1) \rfloor - \lfloor u(t-1) - u(t-2) \rfloor$$
$$f_1(t) = u(t) - 2u(t-1) + u(t-2)$$

$$F_1(s) = \frac{1}{s}(1 - 2e^{-s} + e^{-2s}) = \frac{1}{s}(1 - e^{-s})^2$$

$$F(s) = \frac{F_1(s)}{(1 - e^{-sT})}, \quad T = 2$$
$$F(s) = \mathbf{\frac{(1 - e^{-s})^2}{s(1 - e^{-2s})}}$$

(b) Let $h_1(t) = t^2 \left[u(t) - u(t-2) \right] = t^2 u(t) - t^2 u(t-2)$
$$h_1(t) = t^2 u(t) - (t-2)^2 u(t-2) - 4(t-2)u(t-2) - 4u(t-2)$$

$$H_1(s) = \frac{2}{s^3}(1 - e^{-2s}) - \frac{4}{s^2}e^{-2s} - \frac{4}{s}e^{-2s}$$

$$H(s) = \frac{H_1(s)}{(1 - e^{-Ts})}, \quad T = 2$$
$$H(s) = \mathbf{\frac{2(1 - e^{-2s}) - 4s e^{-2s}(s + s^2)}{s^3(1 - e^{-2s})}}$$

www.konkur.in

Chapter 15, Solution 24.

Design a problem to help other students to better understand how to find the initial and final values of a transfer function.

Although there are many ways to solve this problem, this is an example based on the same kind of problem asked in the third edition.

Problem

Given that

$$F(s) = \frac{s^2 + 10s + 6}{s(s+1)^2(s+2)}$$

Evaluate f(0) and f(∞) if they exist.

Solution

f(0) = [lim_(n → ∞) ((s(s^2 + 10s + 6)/(s(s + 1)^2 (s + 2)))] = **0**

$$f(\infty) = \lim_{s \to 0} sF(s) = \lim_{s \to 0} \frac{s^2 + 10s + 6}{(s+1)^2(s+2)} = \frac{6}{(1)(2)} = \underline{3} = \mathbf{3}$$

www.konkur.in

Chapter 15, Solution 25.

(a) $$f(0) = \lim_{s\to\infty} sF(s) = \lim_{s\to\infty} \frac{5s(s+1)}{(s+2)(s+3)} = \lim_{s\to\infty} \frac{5(1+1/s)}{(1+2/s)(1+3/s)} = \underline{5}$$

$$f(\infty) = \lim_{s\to 0} sF(s) = \lim_{s\to 0} \frac{5s(s+1)}{(s+2)(s+3)} = \underline{0}$$

(b) $$F(s) = \frac{5(s+1)}{(s+2)(s+3)} = \frac{A}{s+2} + \frac{B}{s+3}$$

$$A = \frac{5(-1)}{1} = -5, \qquad B = \frac{5(-2)}{-1} = 10$$

$$F(s) = \frac{-5}{s+2} + \frac{10}{s+3} \qquad \longrightarrow \qquad f(t) = -5e^{-2t} + 10e^{-3t}$$

f(0) = -5 + 10 = **5**
f(∞)= -0 + 0 = **0**

www.konkur.in

Chapter 15, Solution 26.

(a) $$f(0) = \lim_{s\to\infty} sF(s) = \lim_{s\to\infty} \frac{5s^3 + 3s}{s^3 + 4s^2 + 6} = \mathbf{5}$$

Two poles are not in the left-half plane.
$f(\infty)$ **does not exist**

(b) $$f(0) = \lim_{s\to\infty} sF(s) = \lim_{s\to\infty} \frac{s^3 - 2s^2 + s}{4(s-2)(s^2 + 2s + 4)}$$

$$= \lim_{s\to\infty} \frac{1 - \frac{2}{s} + \frac{1}{s^2}}{\left(1 - \frac{2}{s}\right)\left(1 + \frac{2}{s} + \frac{4}{s^2}\right)} = \mathbf{0.25}$$

One pole is not in the left-half plane.
$f(\infty)$ **does not exist**

www.konkur.in

Chapter 15, Solution 27.

(a) $f(t) = \mathbf{u(t) + 2e^{-t}u(t)}$

(b) $G(s) = \dfrac{3(s+4)-11}{s+4} = 3 - \dfrac{11}{s+4}$

$g(t) = \mathbf{3\delta(t) - 11e^{-4t}u(t)}$

(c) $H(s) = \dfrac{4}{(s+1)(s+3)} = \dfrac{A}{s+1} + \dfrac{B}{s+3}$

$A = 2, \qquad B = -2$

$H(s) = \dfrac{2}{s+1} - \dfrac{2}{s+3}$

$h(t) = \mathbf{[2e^{-t} - 2e^{-3t}]u(t)}$

(d) $J(s) = \dfrac{12}{(s+2)^2(s+4)} = \dfrac{A}{s+2} + \dfrac{B}{(s+2)^2} + \dfrac{C}{s+4}$

$B = \dfrac{12}{2} = 6, \quad C = \dfrac{12}{(-2)^2} = 3$

$12 = A(s+2)(s+4) + B(s+4) + C(s+2)^2$

Equating coefficients :

$s^2: \quad 0 = A + C \longrightarrow A = -C = -3$

$s^1: \quad 0 = 6A + B + 4C = 2A + B \longrightarrow B = -2A = 6$

$s^0: \quad 12 = 8A + 4B + 4C = -24 + 24 + 12 = 12$

$J(s) = \dfrac{-3}{s+2} + \dfrac{6}{(s+2)^2} + \dfrac{3}{s+4}$

$j(t) = \mathbf{[3e^{-4t} - 3e^{-2t} + 6te^{-2t}]u(t)}$

www.konkur.in

Chapter 15, Solution 28.

Design a problem to help other students to better understand how to find the inverse Laplace transform.

Although there are many ways to solve this problem, this is an example based on the same kind of problem asked in the third edition.

Problem

Find the inverse Laplace transform of the following functions:

(a) $F(s) = \dfrac{20(s+2)}{s(s^2+6s+25)}$

(b) $P(s) = \dfrac{6s^2+36s+20}{(s+1)(s+2)(s+3)}$

Solution

(a) $F(s) = \dfrac{20(s+2)}{s(s^2+6s+25)} = \dfrac{A}{s} + \dfrac{Bs+C}{s^2+6s+25}$

$20(s+2) = A(s^2+6s+25s) + Bs^2 + Cs$

Equating components,

s^2 : 0 = A + B or B= - A

s: 20 = 6A + C

constant: 40 – 25 A or A = 8/5, B = -8/5, C= 20 – 6A= 52/5

$$F(s) = \frac{8}{5s} + \frac{-\frac{8}{5}s + \frac{52}{5}}{(s+3)^2+4^2} = \frac{8}{5s} + \frac{-\frac{8}{5}(s+3) + \frac{24}{5} + \frac{52}{5}}{(s+3)^2+4^2}$$

$$\underline{f(t) = \frac{8}{5}u(t) - \frac{8}{5}e^{-3t}\cos 4t + \frac{19}{5}e^{-3t}\sin 4t}$$

(b) $P(s) = \dfrac{6s^2+36s+20}{(s+1)(s+2)(s+3)} = \dfrac{A}{s+1} + \dfrac{B}{s+2} + \dfrac{C}{s+3}$

$$A = \frac{6-36+20}{(-1+2)(-1+3)} = -5$$

$$B = \frac{24-72+20}{(-1)(1)} = 28$$

$$C = \frac{54-108+20}{(-2)(-1)} = -17$$

www.konkur.in

$$P(s) = \frac{-5}{s+1} + \frac{28}{s+2} - \frac{17}{s+3}$$

$$p(t) = \underline{(-5e^{-t} + 28e^{-2t} - 17e^{-3t})u(t)}$$

www.konkur.in

Chapter 15, Solution 29.

$$V(s) = \frac{2}{s} + \frac{As + B}{(s+2)^2 + 3^2};\ 2s^2 + 8s + 26 + As^2 + Bs = 2s + 26 \rightarrow A = -2 \text{ and } B = -6$$

$$V(s) = \frac{2}{s} - \frac{2(s+2)}{(s+2)^2 + 3^2} - \frac{2}{3}\frac{3}{(s+2)^2 + 3^2}$$

$$v(t) = \mathbf{(2 - 2e^{-2t}\cos 3t - \frac{2}{3}e^{-2t}\sin 3t)u(t),\ \ t \geq 0}$$

www.konkur.in

Chapter 15, Solution 30.

(a) $$F_1(s) = \frac{6s^2+8s+3}{s(s^2+2s+5)} = \frac{A}{s} + \frac{Bs+C}{s^2+2s+5}$$

$$6s^2+8s+3 = A(s^2+2s+5) + Bs^2 + Cs$$

We equate coefficients.

s^2 : 6 = A + B

s: 8= 2A + C

constant: 3=5A or A=3/5

B=6-A = 27/5, C=8-2A = 34/5

$$F_1(s) = \frac{3/5}{s} + \frac{27s/5+34/5}{s^2+2s+5} = \frac{3/5}{s} + \frac{27(s+1)/5+7/5}{(s+1)^2+2^2}$$

$$\underline{f_1(t) = \left[\frac{3}{5} + \frac{27}{5}e^{-t}\cos 2t + \frac{7}{10}e^{-t}\sin 2t\right]u(t)}$$

(b) $$F_2(s) = \frac{s^2+5s+6}{(s+1)^2(s+4)} = \frac{A}{s+1} + \frac{B}{(s+1)^2} + \frac{C}{s+4}$$

$$s^2+5s+6 = A(s+1)(s+4) + B(s+4) + C(s+1)^2$$

Equating coefficients,

s^2 : 1=A+C

s: 5=5A+B+2C

constant: 6=4A+4B+C

Solving these gives

A=7/9, B= 2/3, C=2/9

$$F_2(s) = \frac{7/9}{s+1} + \frac{2/3}{(s+1)^2} + \frac{2/9}{s+4}$$

$$\underline{f_2(t) = \left[\frac{7}{9}e^{-t} + \frac{2}{3}te^{-t} + \frac{2}{9}e^{-4t}\right]u(t)}$$

(c) $$F_3(s) = \frac{10}{(s+1)(s^2+4s+8)} = \frac{A}{s+1} + \frac{Bs+C}{s^2+4s+8}$$

$$10 = A(s^2+4s+8) + B(s^2+s) + C(s+1)$$

s^2 : 0 = A + B or B = -A

s: 0=4A+ B + C

constant: 10=8A+C

Solving these yields

www.konkur.in

A=2, B= -2, C= -6

$$F_3(s) = \frac{2}{s+1} + \frac{-2s-6}{s^2+4s+8} = \frac{2}{s+1} - \frac{2(s+1)}{(s+1)^2+2^2} - \frac{4}{(s+1)^2+2^2}$$

$f_3(t)$ = **$(2e^{-t} - 2e^{-t}\cos(2t) - 2e^{-t}\sin(2t))u(t)$**.

www.konkur.in

Chapter 15, Solution 31.

(a) $$F(s) = \frac{10s}{(s+1)(s+2)(s+3)} = \frac{A}{s+1} + \frac{B}{s+2} + \frac{C}{s+3}$$

$$A = F(s)(s+1)\Big|_{s=-1} = \frac{-10}{2} = -5$$

$$B = F(s)(s+2)\Big|_{s=-2} = \frac{-20}{-1} = 20$$

$$C = F(s)(s+3)\Big|_{s=-3} = \frac{-30}{2} = -15$$

$$F(s) = \frac{-5}{s+1} + \frac{20}{s+2} - \frac{15}{s+3}$$

$$f(t) = \mathbf{(-5e^{-t} + 20e^{-2t} - 15e^{-3t})u(t)}$$

(b) $$F(s) = \frac{2s^2+4s+1}{(s+1)(s+2)^3} = \frac{A}{s+1} + \frac{B}{s+2} + \frac{C}{(s+2)^2} + \frac{D}{(s+2)^3}$$

$$A = F(s)(s+1)\Big|_{s=-1} = -1$$

$$D = F(s)(s+2)^3\Big|_{s=-2} = -1$$

$$2s^2 + 4s + 1 = A(s+2)(s^2+4s+4) + B(s+1)(s^2+4s+4) + C(s+1)(s+2) + D(s+1)$$

Equating coefficients :

s^3: $\quad 0 = A + B \longrightarrow B = -A = 1$

s^2: $\quad 2 = 6A + 5B + C = A + C \longrightarrow C = 2 - A = 3$

s^1: $\quad 4 = 12A + 8B + 3C + D = 4A + 3C + D$

$\quad 4 = 6 + A + D \longrightarrow D = -2 - A = -1$

s^0: $\quad 1 = 8A + 4B + 2C + D = 4A + 2C + D = -4 + 6 - 1 = 1$

$$F(s) = \frac{-1}{s+1} + \frac{1}{s+2} + \frac{3}{(s+2)^2} - \frac{1}{(s+2)^3}$$

$$f(t) = -e^{-t} + e^{-2t} + 3te^{-2t} - \frac{t^2}{2}e^{-2t}$$

$$f(t) = \mathbf{\left(-e^{-t} + \left(1 + 3t - \frac{t^2}{2}\right)e^{-2t}\right)u(t)}$$

www.konkur.in

(c) $$F(s) = \frac{s+1}{(s+2)(s^2+2s+5)} = \frac{A}{s+2} + \frac{Bs+C}{s^2+2s+5}$$

$$A = F(s)(s+2)\Big|_{s=-2} = \frac{-1}{5}$$

$$s+1 = A(s^2+2s+5) + B(s^2+2s) + C(s+2)$$

Equating coefficients :

s^2 : $\quad 0 = A + B \longrightarrow B = -A = \frac{1}{5}$

s^1 : $\quad 1 = 2A + 2B + C = 0 + C \longrightarrow C = 1$

s^0 : $\quad 1 = 5A + 2C = -1 + 2 = 1$

$$F(s) = \frac{-1/5}{s+2} + \frac{1/5 \cdot s + 1}{(s+1)^2 + 2^2} = \frac{-1/5}{s+2} + \frac{1/5(s+1)}{(s+1)^2+2^2} + \frac{4/5}{(s+1)^2+2^2}$$

$$f(t) = \mathbf{(-0.2e^{-2t} + 0.2e^{-t}\cos(2t) + 0.4e^{-t}\sin(2t))u(t)}$$

www.konkur.in

Chapter 15, Solution 32.

(a) $$F(s) = \frac{8(s+1)(s+3)}{s(s+2)(s+4)} = \frac{A}{s} + \frac{B}{s+2} + \frac{C}{s+4}$$

$$A = F(s)s\Big|_{s=0} = \frac{(8)(3)}{(2)(4)} = 3$$

$$B = F(s)(s+2)\Big|_{s=-2} = \frac{(8)(-1)}{(-4)} = 2$$

$$C = F(s)(s+4)\Big|_{s=-4} = \frac{(8)(-1)(-3)}{(-4)(-2)} = 3$$

$$F(s) = \frac{3}{s} + \frac{2}{s+2} + \frac{3}{s+4}$$

$$f(t) = \mathbf{3u(t) + 2e^{-2t} + 3e^{-4t}}$$

(b) $$F(s) = \frac{s^2 - 2s + 4}{(s+1)(s+2)^2} = \frac{A}{s+1} + \frac{B}{s+2} + \frac{C}{(s+2)^2}$$

$$s^2 - 2s + 4 = A(s^2 + 4s + 4) + B(s^2 + 3s + 2) + C(s+1)$$

Equating coefficients :

s^2: $\quad 1 = A + B \longrightarrow B = 1 - A$

s^1: $\quad -2 = 4A + 3B + C = 3 + A + C$

s^0: $\quad 4 = 4A + 2B + C = -B - 2 \longrightarrow B = -6$

$A = 1 - B = 7 \qquad C = -5 - A = -12$

$$F(s) = \frac{7}{s+1} - \frac{6}{s+2} - \frac{12}{(s+2)^2}$$

$$f(t) = \mathbf{7e^{-t} - 6(1+2t)e^{-2t}}$$

(c) $$F(s) = \frac{s^2 + 1}{(s+3)(s^2 + 4s + 5)} = \frac{A}{s+3} + \frac{Bs + C}{s^2 + 4s + 5}$$

$$s^2 + 1 = A(s^2 + 4s + 5) + B(s^2 + 3s) + C(s+3)$$

Equating coefficients :

s^2: $\quad 1 = A + B \longrightarrow B = 1 - A$

www.konkur.in

s^1: $\quad 0 = 4A + 3B + C = 3 + A + C \longrightarrow A + C = -3$

s^0: $\quad 1 = 5A + 3C = -9 + 2A \longrightarrow A = 5$

$B = 1 - A = -4 \qquad C = -A - 3 = -8$

$$F(s) = \frac{5}{s+3} - \frac{4s+8}{(s+2)^2+1} = \frac{5}{s+3} - \frac{4(s+2)}{(s+2)^2+1}$$

$f(t) = \mathbf{5e^{-3t} - 4e^{-2t}\cos(t)}$

Chapter 15, Solution 33.

(a) $$F(s) = \frac{6(s-1)}{s^4-1} = \frac{6}{(s^2+1)(s+1)} = \frac{As+B}{s^2+1} + \frac{C}{s+1}$$

$$6 = A(s^2+s) + B(s+1) + C(s^2+1)$$

Equating coefficients :

s^2: $0 = A + C \longrightarrow A = -C$

s^1: $0 = A + B \longrightarrow B = -A = C$

s^0: $6 = B + C = 2B \longrightarrow B = 3$

$A = -3, \quad B = 3, \quad C = 3$

$$F(s) = \frac{3}{s+1} + \frac{-3s+3}{s^2+1} = \frac{3}{s+1} + \frac{-3s}{s^2+1} + \frac{3}{s^2+1}$$

$$f(t) = \mathbf{(3e^{-t} + 3\sin(t) - 3\cos(t))u(t)}$$

(b) $$F(s) = \frac{s\,e^{-\pi s}}{s^2+1}$$

$$f(t) = \mathbf{\cos(t-\pi)u(t-\pi)}$$

(c) $$F(s) = \frac{8}{s(s+1)^3} = \frac{A}{s} + \frac{B}{s+1} + \frac{C}{(s+1)^2} + \frac{D}{(s+1)^3}$$

$A = 8, \quad D = -8$

$$8 = A(s^3+3s^2+3s+1) + B(s^3+2s^2+s) + C(s^2+s) + Ds$$

Equating coefficients :

s^3: $0 = A + B \longrightarrow B = -A$

s^2: $0 = 3A + 2B + C = A + C \longrightarrow C = -A = B$

s^1: $0 = 3A + B + C + D = A + D \longrightarrow D = -A$

s^0: $A = 8, \quad B = -8, \quad C = -8, \quad D = -8$

$$F(s) = \frac{8}{s} - \frac{8}{s+1} - \frac{8}{(s+1)^2} - \frac{8}{(s+1)^3}$$

$$f(t) = \mathbf{8\left[1 - e^{-t} - t\,e^{-t} - 0.5\,t^2\,e^{-t}\right]u(t)}$$

(a) $(3e^{-t} + 3\sin(t) - 3\cos(t))u(t)$, (b) $\cos(t-\pi)u(t-\pi)$, (c) $8\left[1 - e^{-t} - t\,e^{-t} - 0.5\,t^2\,e^{-t}\right]u(t)$

www.konkur.in

Chapter 15, Solution 34.

(a) $$F(s) = 10 + \frac{s^2 + 4 - 3}{s^2 + 4} = 11 - \frac{3}{s^2 + 4}$$

$$f(t) = \mathbf{11\delta(t) - 1.5\sin(2t)}$$

(b) $$G(s) = \frac{e^{-s} + 4e^{-2s}}{(s+2)(s+4)}$$

Let $$\frac{1}{(s+2)(s+4)} = \frac{A}{s+2} + \frac{B}{s+4}$$

$$A = 1/2 \qquad B = 1/2$$

$$G(s) = \frac{e^{-s}}{2}\left(\frac{1}{s+2} + \frac{1}{s+4}\right) + 2e^{-2s}\left(\frac{1}{s+2} + \frac{1}{s+4}\right)$$

$$g(t) = \mathbf{0.5\left[e^{-2(t-1)} - e^{-4(t-1)}\right]u(t-1) + 2\left[e^{-2(t-2)} - e^{-4(t-2)}\right]u(t-2)}$$

(c) Let $$\frac{s+1}{s(s+3)(s+4)} = \frac{A}{s} + \frac{B}{s+3} + \frac{C}{s+4}$$

$$A = 1/12, \qquad B = 2/3, \qquad C = -3/4$$

$$H(s) = \left(\frac{1}{12}\cdot\frac{1}{s} + \frac{2/3}{s+3} - \frac{3/4}{s+4}\right)e^{-2s}$$

$$h(t) = \mathbf{\left(\frac{1}{12} + \frac{2}{3}e^{-3(t-2)} - \frac{3}{4}e^{-4(t-2)}\right)u(t-2)}$$

www.konkur.in

Chapter 15, Solution 35.

(a) Let $G(s) = \dfrac{s+3}{(s+1)(s+2)} = \dfrac{A}{s+1} + \dfrac{B}{s+2}$

$A = 2, \qquad B = -1$

$G(s) = \dfrac{2}{s+1} - \dfrac{1}{s+2} \longrightarrow g(t) = 2e^{-t} - e^{-2t}$

$F(s) = e^{-6s}\,G(s) \longrightarrow f(t) = g(t-6)\,u(t-6)$

$f(t) = \mathbf{\left[2e^{-(t-6)} - e^{-2(t-6)}\right]u(t-6)}$

(b) Let $G(s) = \dfrac{1}{(s+1)(s+4)} = \dfrac{A}{s+1} + \dfrac{B}{s+4}$

$A = 1/3, \qquad B = -1/3$

$G(s) = \dfrac{1}{3(s+1)} - \dfrac{1}{3(s+4)}$

$g(t) = \dfrac{1}{3}\left[e^{-t} - e^{-4t}\right]$

$F(s) = 4G(s) - e^{-2t}\,G(s)$

$f(t) = 4g(t)\,u(t) - g(t-2)\,u(t-2)$

$f(t) = \mathbf{\dfrac{4}{3}\left[e^{-t} - e^{-4t}\right]u(t) - \dfrac{1}{3}\left[e^{-(t-2)} - e^{-4(t-2)}\right]u(t-2)}$

(c) Let $G(s) = \dfrac{s}{(s+3)(s^2+4)} = \dfrac{A}{s+3} + \dfrac{Bs+C}{s^2+4}$

$A = -3/13$

$s = A(s^2+4) + B(s^2+3s) + C(s+3)$

Equating coefficients :

$s^2: \quad 0 = A + B \longrightarrow B = -A$

$s^1: \quad 1 = 3B + C$

www.konkur.in

$s^0: \qquad 0 = 4A + 3C$

$A = -3/13, \qquad B = 3/13, \qquad C = 4/13$

$$13G(s) = \frac{-3}{s+3} + \frac{3s+4}{s^2+4}$$

$$13g(t) = -3e^{-3t} + 3\cos(2t) + 2\sin(2t)$$

$$F(s) = e^{-s}\,G(s)$$

$$f(t) = g(t-1)\,u(t-1)$$

$$f(t) = \mathbf{\frac{1}{13}\left[-3e^{-3(t-1)} + 3\cos(2(t-1)) + 2\sin(2(t-1))\right]u(t-1)}$$

www.konkur.in

Chapter 15, Solution 36.

(a) $$X(s) = 3\frac{1}{s^2(s+2)(s+3)} = 3\left\{\frac{A}{s} + \frac{B}{s^2} + \frac{C}{s+2} + \frac{D}{s+3}\right\}$$

$B = 1/6, \qquad C = 1/4, \qquad D = -1/9$

$$1 = A(s^3 + 5s^2 + 6s) + B(s^2 + 5s + 6) + C(s^3 + 3s^2) + D(s^3 + 2s^2)$$

Equating coefficients :

$s^3: \quad 0 = A + C + D$

$s^2: \quad 0 = 5A + B + 3C + 2D = 3A + B + C$

$s^1: \quad 0 = 6A + 5B$

$s^0: \quad 1 = 6B \longrightarrow B = 1/6$

$A = -5/6\,B = -5/36$

$$X(s) = 3\left(\frac{-5/36}{s} + \frac{1/6}{s^2} + \frac{1/4}{s+2} - \frac{1/9}{s+3}\right)$$

$$x(t) = \left(\frac{-5}{12}\mathbf{u(t)} + \frac{1}{2}\mathbf{t} + \frac{3}{4}\mathbf{e^{-2t}} - \frac{1}{3}\mathbf{e^{-3t}}\right)\mathbf{u(t)}$$

(b) $$Y(s) = 2\frac{1}{s(s+1)^2} = 2\left(\frac{A}{s} + \frac{B}{s+1} + \frac{C}{(s+1)^2}\right)$$

$A = 1, \qquad C = -1$

$$1 = A(s^2 + 2s + 1) + B(s^2 + s) + Cs$$

Equating coefficients :

$s^2: \quad 0 = A + B \longrightarrow B = -A$

$s^1: \quad 0 = 2A + B + C = A + C \longrightarrow C = -A$

$s^0: \quad 1 = A, \quad B = -1, \quad C = -1$

$$Y(s) = 2\left(\frac{1}{s} - \frac{1}{s+1} - \frac{1}{(s+1)^2}\right)$$

$$y(t) = \left(\mathbf{2 - 2e^{-t} - 2t\,e^{-t}}\right)\mathbf{u(t)}$$

www.konkur.in

(c) $$Z(s) = 5\left(\frac{A}{s} + \frac{B}{s+1} + \frac{Cs+D}{s^2+6s+10}\right)$$

$A = 1/10, \qquad B = -1/5$

$$1 = A(s^3 + 7s^2 + 16s + 10) + B(s^3 + 6s^2 + 10s) + C(s^3 + s^2) + D(s^2 + s)$$

Equating coefficients :

$s^3: \quad 0 = A + B + C$

$s^2: \quad 0 = 7A + 6B + C + D = 6A + 5B + D$

$s^1: \quad 0 = 16A + 10B + D = 10A + 5B \longrightarrow B = -2A$

$s^0: \quad 1 = 10A \longrightarrow A = 1/10$

$A = 1/10, \qquad B = -2A = -1/5, \qquad C = A = 1/10, \qquad D = 4A = \frac{4}{10}$

$$\frac{10}{5}Z(s) = \frac{1}{s} - \frac{2}{s+1} + \frac{s+4}{s^2+6s+10}$$

$$2Z(s) = \frac{1}{s} - \frac{2}{s+1} + \frac{s+3}{(s+3)^2+1} + \frac{1}{(s+3)^2+1}$$

$$z(t) = \mathbf{0.5\left[1 - 2e^{-t} + e^{-3t}\cos(t) + e^{-3t}\sin(t)\right]u(t)}$$

www.konkur.in

Chapter 15, Solution 37.

(a) $H(s) = \dfrac{s+4}{s(s+2)} = \dfrac{A}{s} + \dfrac{B}{s+2}$

s+4 =A(s+2) + Bs
Equating coefficients,
s: 1 = A + B
constant: 4= 2 A $\longrightarrow$ A =2, B=1-A = -1

$$H(s) = \frac{2}{s} - \frac{1}{s+2}$$
$$h(t) = 2u(t) - e^{-2t}u(t) = \underline{(2 - e^{-2t})u(t)}$$

(b) $G(s) = \dfrac{A}{s+3} + \dfrac{Bs+C}{s^2+2s+2}$

$$s^2 + 4s + 5 = (Bs + C)(s+3) + A(s^2 + 2s + 2)$$

Equating coefficients,
s^2: 1= B + A (1)
s: 4 = 3B + C + 2A (2)
Constant: 5 =3C + 2A (3)

Solving (1) to (3) gives

$$A = \frac{2}{5}, \quad B = \frac{3}{5}, \quad C = \frac{7}{5}$$
$$G(s) = \frac{0.4}{s+3} + \frac{0.6s+1.4}{s^2+2s+2} = \frac{0.4}{s+3} + \frac{0.6(s+1)+0.8}{(s+1)^2+1}$$
$$g(t) = \underline{0.4e^{-3t} + 0.6e^{-t}\cos t + 0.8e^{-t}\sin t}\ \text{u(t)}$$

(c) $f(t) = \underline{e^{-2(t-4)}u(t-4)}$

(d) $D(s) = \dfrac{10s}{(s^2+1)(s^2+4)} = \dfrac{As+B}{s^2+1} + \dfrac{Cs+D}{s^2+4}$

$$10s = (s^2+4)(As+B) + (s^2+1)(Cs+D)$$

Equating coefficients,
s^3 : 0 = A + C
s^2 : 0 = B + D
s: 10 = 4A + C
constant: 0 = 4B+D
Solving these leads to
A = -10/3, B = 0, C = -10/3, D = 0

www.konkur.in

$$D(s) == \frac{10s/3}{s^2+1} - \frac{10s/3}{s^2+4}$$

$$d(t) = \frac{10}{3}\cos t - \frac{10}{3}\cos 2t\,\mathrm{u(t)}$$

www.konkur.in

Chapter 15, Solution 38.

(a) $$F(s) = \frac{s^2 + 4s}{s^2 + 10s + 26} = \frac{s^2 + 10s + 26 - 6s - 26}{s^2 + 10s + 26}$$

$$F(s) = 1 - \frac{6s + 26}{s^2 + 10s + 26}$$

$$F(s) = 1 - \frac{6(s+5)}{(s+5)^2 + 1^2} + \frac{4}{(s+5)^2 + 1^2}$$

$$f(t) = \boldsymbol{\delta(t) - 6e^{-t}\cos(5t) + 4e^{-t}\sin(5t)}$$

(b) $$F(s) = \frac{5s^2 + 7s + 29}{s(s^2 + 4s + 29)} = \frac{A}{s} + \frac{Bs + C}{s^2 + 4s + 29}$$

$$5s^2 + 7s + 29 = A(s^2 + 4s + 29) + Bs^2 + Cs$$

Equating coefficients :

s^0: $\quad 29 = 29A \longrightarrow A = 1$

s^1: $\quad 7 = 4A + C \longrightarrow C = 7 - 4A = 3$

s^2: $\quad 5 = A + B \longrightarrow B = 5 - A = 4$

$A = 1, \qquad B = 4, \qquad C = 3$

$$F(s) = \frac{1}{s} + \frac{4s + 3}{s^2 + 4s + 29} = \frac{1}{s} + \frac{4(s+2)}{(s+2)^2 + 5^2} - \frac{5}{(s+2)^2 + 5^2}$$

$$f(t) = \boldsymbol{u(t) + 4e^{-2t}\cos(5t) - e^{-2t}\sin(5t)}$$

Chapter 15, Solution 39.

(a) $$F(s) = \frac{2s^3 + 4s^2 + 1}{(s^2 + 2s + 17)(s^2 + 4s + 20)} = \frac{As + B}{s^2 + 2s + 17} + \frac{Cs + D}{s^2 + 4s + 20}$$

$$s^3 + 4s^2 + 1 = A(s^3 + 4s^2 + 20s) + B(s^2 + 4s + 20)$$
$$+ C(s^3 + 2s^2 + 17s) + D(s^2 + 2s + 17)$$

Equating coefficients :

s^3: $2 = A + C$

s^2: $4 = 4A + B + 2C + D$

s^1: $0 = 20A + 4B + 17C + 2D$

s^0: $1 = 20B + 17D$

Solving these equations (Matlab works well with 4 unknowns),
$A = -1.6$, $B = -17.8$, $C = 3.6$, $D = 21$

$$F(s) = \frac{-1.6s - 17.8}{s^2 + 2s + 17} + \frac{3.6s + 21}{s^2 + 4s + 20}$$

$$F(s) = \frac{(-1.6)(s+1)}{(s+1)^2 + 4^2} + \frac{(-4.05)(4)}{(s+1)^2 + 4^2} + \frac{(3.6)(s+2)}{(s+2)^2 + 4^2} + \frac{(3.45)(4)}{(s+2)^2 + 4^2}$$

$f(t) =$

$$\mathbf{[-1.6e^{-t}\cos(4t) - 4.05e^{-t}\sin(4t) + 3.6e^{-2t}\cos(4t) + 3.45e^{-2t}\sin(4t)]u(t)}$$

(b) $$F(s) = \frac{s^2 + 4}{(s^2 + 9)(s^2 + 6s + 3)} = \frac{As + B}{s^2 + 9} + \frac{Cs + D}{s^2 + 6s + 3}$$

$$s^2 + 4 = A(s^3 + 6s^2 + 3s) + B(s^2 + 6s + 3) + C(s^3 + 9s) + D(s^2 + 9)$$

Equating coefficients :

s^3: $0 = A + C \longrightarrow C = -A$

s^2: $1 = 6A + B + D$

s^1: $0 = 3A + 6B + 9C = 6B + 6C \longrightarrow B = -C = A$

s^0: $4 = 3B + 9D$

Solving these equations,
$A = 1/12$, $B = 1/12$, $C = -1/12$, $D = 5/12$

$$12F(s) = \frac{s+1}{s^2 + 9} + \frac{-s+5}{s^2 + 6s + 3}$$

www.konkur.in

$$s^2 + 6s + 3 = 0 \longrightarrow \frac{-6 \pm \sqrt{36-12}}{2} = -0.551, -5.449$$

Let $$G(s) = \frac{-s+5}{s^2+6s+3} = \frac{E}{s+0.551} + \frac{F}{s+5.449}$$

$$E = \frac{-s+5}{s+5.449}\Big|_{s=-0.551} = 1.133$$

$$F = \frac{-s+5}{s+0.551}\Big|_{s=-5.449} = -2.133$$

$$G(s) = \frac{1.133}{s+0.551} - \frac{2.133}{s+5.449}$$

$$12\,F(s) = \frac{s}{s^2+3^2} + \frac{1}{3}\cdot\frac{3}{s^2+3^2} + \frac{1.133}{s+0.551} - \frac{2.133}{s+5.449}$$

$$f(t) =$$

$$\mathbf{[\,0.08333\cos(3t) + 0.02778\sin(3t) + 0.0944\,e^{-0.551t} - 0.1778\,e^{-5.449t}\,]u(t)}$$

www.konkur.in

Chapter 15, Solution 40.

$$\text{Let } H(s) = \left[\frac{4s^2+7s+13}{(s+2)(s^2+2s+5)}\right] = \frac{A}{s+2} + \frac{Bs+C}{s^2+2s+5}$$

$$4s^2+7s+13 = A(s^2+2s+5) + B(s^2+2s) + C(s+2)$$

Equating coefficients gives:

s^2 : $\quad 4 = A + B$

s : $\quad 7 = 2A + 2B + C \quad \longrightarrow \quad C = -1$

constant : $\quad 13 = 5A + 2C \quad \longrightarrow \quad 5A = 15$ or $A = 3,\ B = 1$

$$H(s) = \frac{3}{s+2} + \frac{s-1}{s^2+2s+5} = \frac{3}{s+2} + \frac{(s+1)-2}{(s+1)^2+2^2}$$

Hence,

$$h(t) = 3e^{-2t} + e^{-t}\cos 2t - e^{-t}\sin 2t = 3e^{-2t} + e^{-t}(A\cos\alpha\cos 2t - A\sin\alpha\sin 2t)$$

where $A\cos\alpha = 1, \quad A\sin\alpha = 1 \quad \longrightarrow \quad A = \sqrt{2}, \quad \alpha = 45^o$

Thus,

$$\mathbf{h(t) = \left[\sqrt{2}e^{-t}\cos(2t+45^o) + 3e^{-2t}\right]u(t)}$$

www.konkur.in

Chapter 15, Solution 41.

We fold x(t) and slide on y(t). For t<0, no overlapping as shown below. x(t) =0.

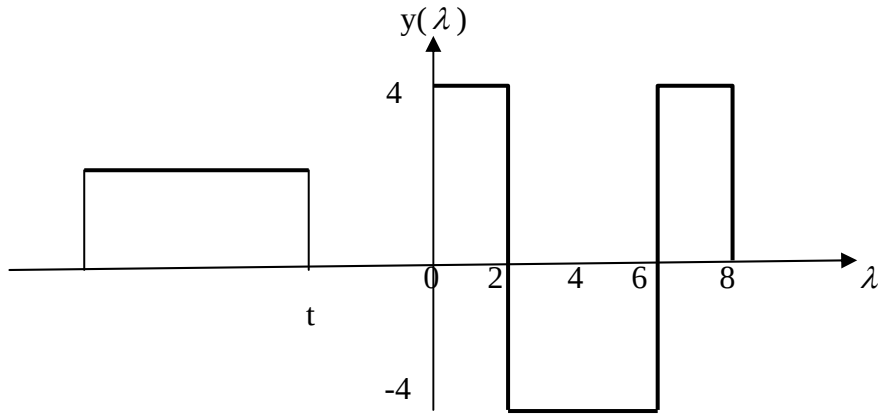

For 0 < t < 2, there is overlapping, as shown below.

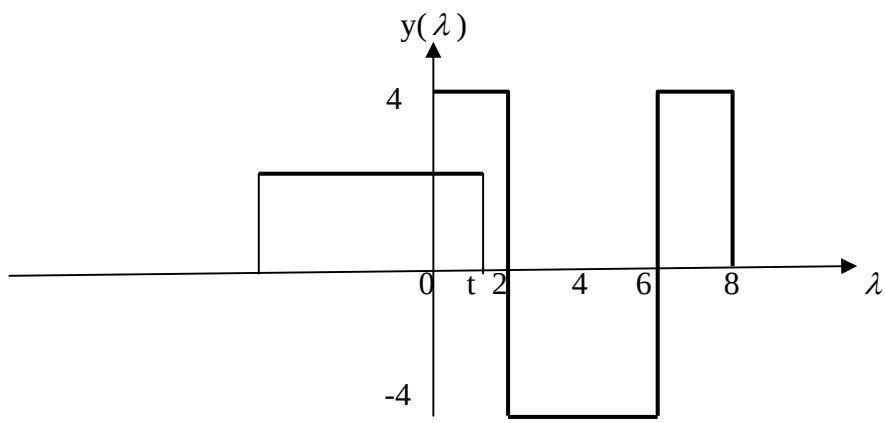

$$z(t) = \int_0^t (2)(4)dt = 8t$$

For 2 < t < 6, the two functions overlap, as shown below.

www.konkur.in

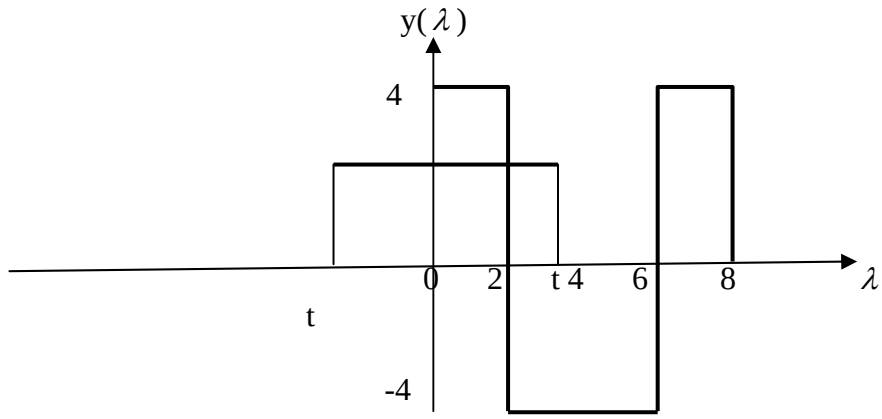

$$z(t)=\int_0^2 (2)(4)d\lambda+\int_0^t (2)(-4)d\lambda=16-8t$$

For 6<t<8, they overlap as shown below.

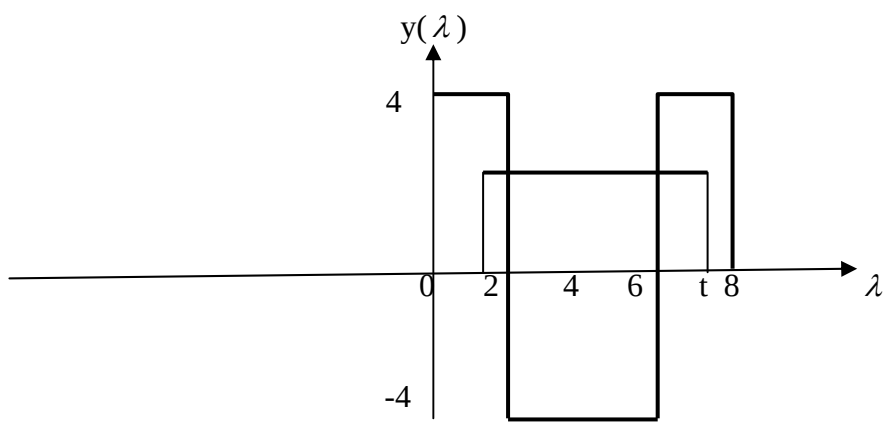

$$z(t)=\int_{t-6}^{2} (2)(4)d\lambda+\int_2^6 (2)(-4)d\lambda+\int_6^t (2)(4)d\lambda=8\lambda\Big|_{t-6}^{2}-8\lambda\Big|_2^6+8\lambda\Big|_6^t=-16$$

For 8< t <12, they overlap as shown below.

www.konkur.in

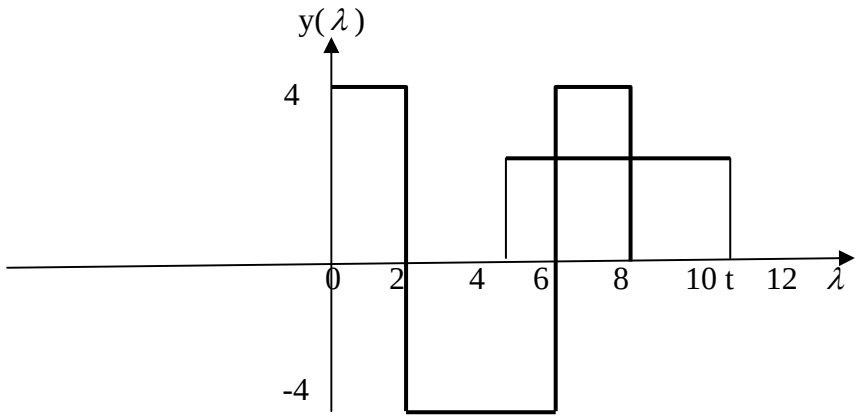

$$z(t) = \int_{t-6}^{6} (2)(-4)d\lambda + \int_{6}^{8} (2)(4)d\lambda = -8\lambda\Big|_{t-6}^{6} + 8\lambda\Big|_{6}^{8} = 8t - 80$$

For 12 < t < 14, they overlap as shown below.

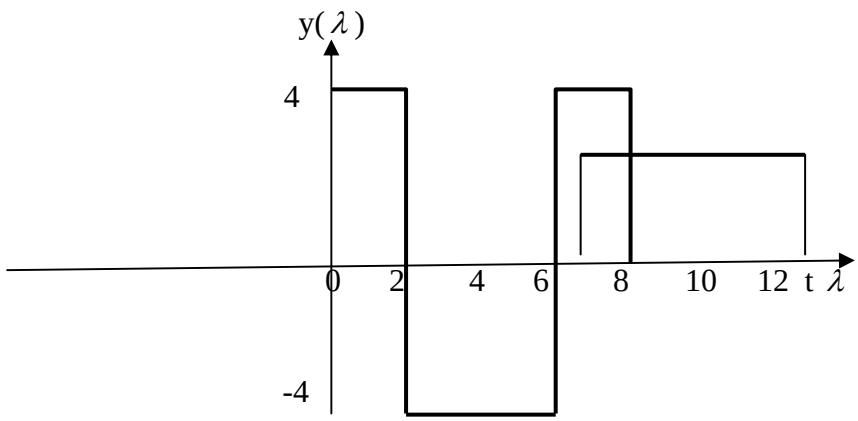

$$z(t) = \int_{t-6}^{8} (2)(4)d\lambda = 8\lambda\Big|_{t-6}^{8} = 112 - 8t$$

Hence,

z(t) =	**8t,**	**0<t<2**
	16–8t,	**2<t<6**
	–16,	**6<t<8**
	8t–80,	**8<t<12**
	112–8t,	**12<t<14**
	0,	**otherwise**.

www.konkur.in

Chapter 15, Solution 42.

Design a problem to help other students to better understand how to convolve two functions together.

Although there are many ways to solve this problem, this is an example based on the same kind of problem asked in the third edition.

Problem

Suppose that f(t) = u(t) – u(t-2). Determine f(t)*f(t).

Solution

For 0<t<2, the signals overlap as shown below.

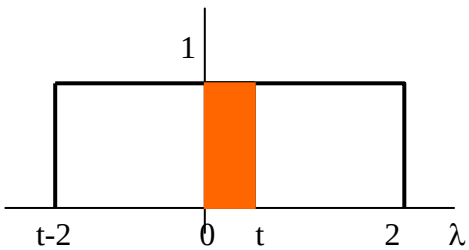

$$y(t) = f(t) * f(t) = \int_0^t (1)(1)d\lambda = t$$

For 2 < t< 4, they overlap as shown below.

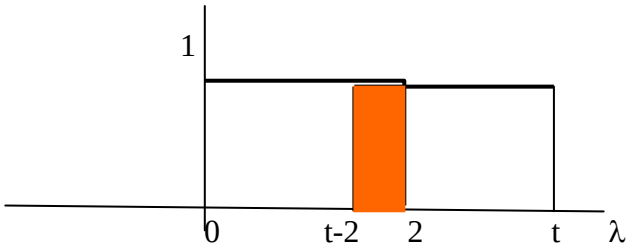

$$y(t) = \int_{t-2}^{2} (1)(1)d\lambda = t\Big|_{t-2}^{2} = 4 - t$$

Thus,

www.konkur.in

$$y(t) = \begin{cases} t, & 0 < t < 2 \\ 4 - t, & 2 < t < 4 \\ 0, & \text{otherwise} \end{cases}$$

www.konkur.in

Chapter 15, Solution 43.

(a) For $0 < t < 1$, $x(t-\lambda)$ and $h(\lambda)$ overlap as shown in Fig. (a).

$$y(t) = x(t) * h(t) = \int_0^t (1)(\lambda)\, d\lambda = \frac{\lambda^2}{2}\Big|_0^t = \frac{t^2}{2}$$

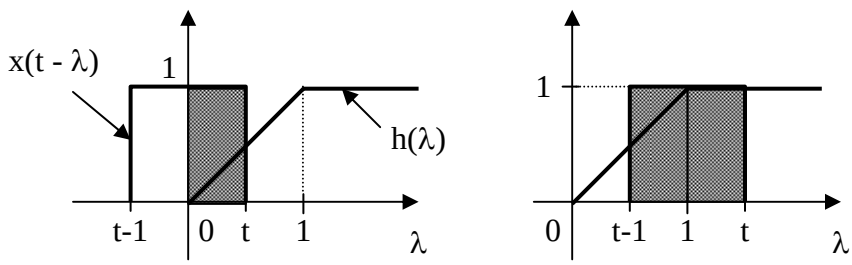

(a) **(b)**

For $1 < t < 2$, $x(t-\lambda)$ and $h(\lambda)$ overlap as shown in Fig. (b).

$$y(t) = \int_{t-1}^{1} (1)(\lambda)\, d\lambda + \int_1^t (1)(1)\, d\lambda = \frac{\lambda^2}{2}\Big|_{t-1}^{1} + \lambda\Big|_1^t = \frac{-1}{2}t^2 + 2t - 1$$

For $t > 2$, there is a complete overlap so that

$$y(t) = \int_{t-1}^{t} (1)(1)\, d\lambda = \lambda\Big|_{t-1}^{t} = t - (t-1) = 1$$

Therefore,

$$y(t) = \begin{cases} \mathbf{t^2/2,} & \mathbf{0 < t < 1} \\ \mathbf{-(t^2/2) + 2t - 1,} & \mathbf{1 < t < 2} \\ \mathbf{1,} & \mathbf{t > 2} \\ \mathbf{0,} & \mathbf{otherwise} \end{cases}$$

(b) For $t > 0$, the two functions overlap as shown in Fig. (c).

$$y(t) = x(t) * h(t) = \int_0^t (1)\, 2e^{-\lambda}\, d\lambda = -2e^{-\lambda}\Big|_0^t$$

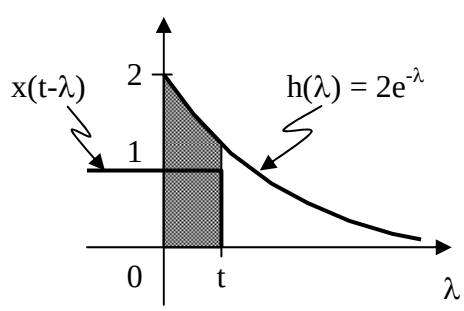

(c)

Therefore,

$$y(t) = \mathbf{2(1 - e^{-t}),} \quad \mathbf{t > 0}$$

www.konkur.in

(c) For $-1 < t < 0$, $x(t-\lambda)$ and $h(\lambda)$ overlap as shown in Fig. (d).

$$y(t) = x(t) * h(t) = \int_0^{t+1} (1)(\lambda)\, d\lambda = \frac{\lambda^2}{2}\Big|_0^{t+1} = \frac{1}{2}(t+1)^2$$

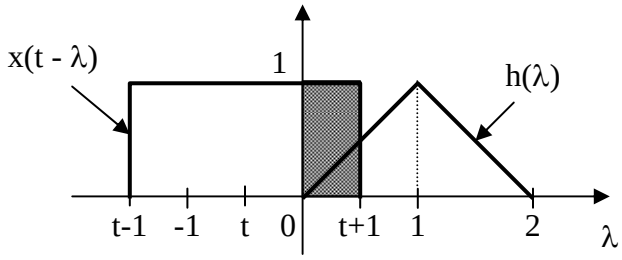

(d)

For $0 < t < 1$, $x(t-\lambda)$ and $h(\lambda)$ overlap as shown in Fig. (e).

$$y(t) = \int_0^1 (1)(\lambda)\, d\lambda + \int_1^{t+1} (1)(2-\lambda)\, d\lambda$$

$$y(t) = \frac{\lambda^2}{2}\Big|_0^1 + \left(2\lambda - \frac{\lambda^2}{2}\right)\Big|_1^{t+1} = \frac{-1}{2}t^2 + t + \frac{1}{2}$$

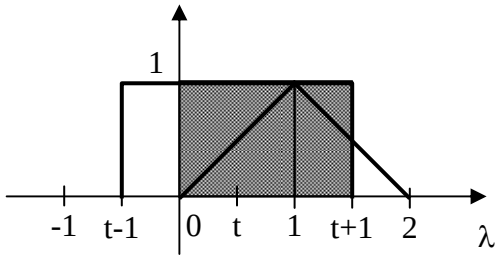

(e)

For $1 < t < 2$, $x(t-\lambda)$ and $h(\lambda)$ overlap as shown in Fig. (f).

$$y(t) = \int_{t-1}^1 (1)(\lambda)\, d\lambda + \int_1^2 (1)(2-\lambda)\, d\lambda$$

$$y(t) = \frac{\lambda^2}{2}\Big|_{t-1}^1 + \left(2\lambda - \frac{\lambda^2}{2}\right)\Big|_1^2 = \frac{-1}{2}t^2 + t + \frac{1}{2}$$

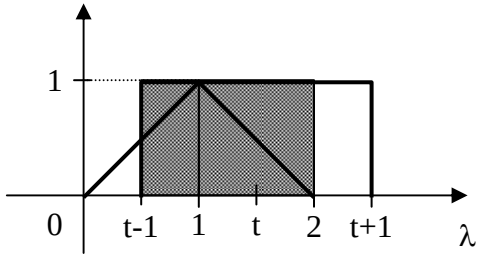

(f)

www.konkur.in

For $2 < t < 3$, $x(t-\lambda)$ and $h(\lambda)$ overlap as shown in Fig. (g).

$$y(t) = \int_{t-1}^{2} (1)(2-\lambda)\, d\lambda = \left(2\lambda - \frac{\lambda^2}{2}\right)\Big|_{t-1}^{2} = \frac{9}{2} - 3t + \frac{1}{2}t^2$$

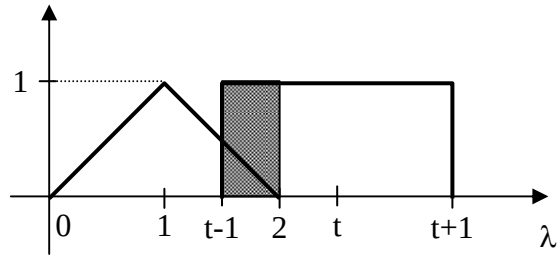

(g)

Therefore,

$$y(t) = \begin{cases} \mathbf{(t^2/2) + t + 1/2,} & \mathbf{-1 < t < 0} \\ \mathbf{-(t^2/2) + t + 1/2,} & \mathbf{0 < t < 2} \\ \mathbf{(t^2/2) - 3t + 9/2,} & \mathbf{2 < t < 3} \\ \mathbf{0,} & \mathbf{otherwise} \end{cases}$$

www.konkur.in

Chapter 15, Solution 44.

(a) For $0 < t < 1$, $x(t-\lambda)$ and $h(\lambda)$ overlap as shown in Fig. (a).

$$y(t) = x(t) * h(t) = \int_0^t (1)(1)\, d\lambda = t$$

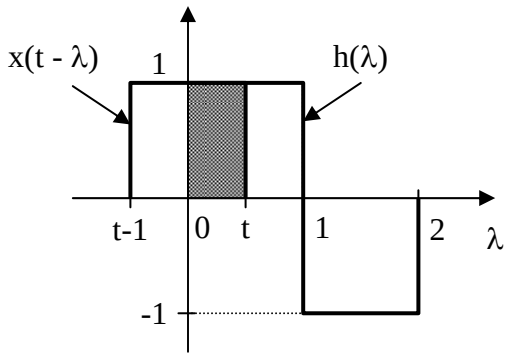

(a)

For $1 < t < 2$, $x(t-\lambda)$ and $h(\lambda)$ overlap as shown in Fig. (b).

$$y(t) = \int_{t-1}^{1} (1)(1)\, d\lambda + \int_1^t (-1)(1)\, d\lambda = \lambda\Big|_{t-1}^{1} - \lambda\Big|_1^t = 3 - 2t$$

For $2 < t < 3$, $x(t-\lambda)$ and $h(\lambda)$ overlap as shown in Fig. (c).

$$y(t) = \int_{t-1}^{2} (1)(-1)\, d\lambda = -\lambda\Big|_{t-1}^{2} = t - 3$$

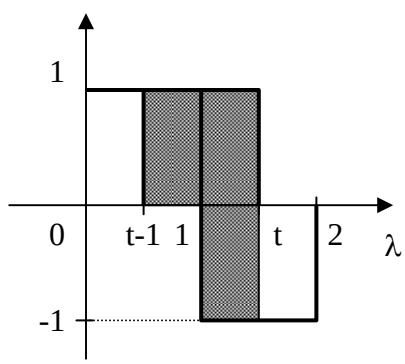

(b)

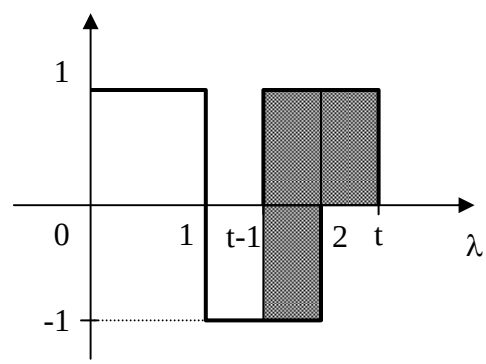

(c)

Therefore,

$$y(t) = \begin{cases} \mathbf{t,} & \mathbf{0 < t < 1} \\ \mathbf{3 - 2t,} & \mathbf{1 < t < 2} \\ \mathbf{t - 3,} & \mathbf{2 < t < 3} \\ \mathbf{0,} & \textbf{otherwise} \end{cases}$$

www.konkur.in

(b) For $t < 2$, there is no overlap. For $2 < t < 3$, $f_1(t-\lambda)$ and $f_2(\lambda)$ overlap, as shown in Fig. (d).

$$y(t) = f_1(t) * f_2(t) = \int_2^t (1)(t-\lambda)\, d\lambda$$

$$= \left(\lambda t - \frac{\lambda^2}{2}\right)\Big|_2^t = \frac{t^2}{2} - 2t + 2$$

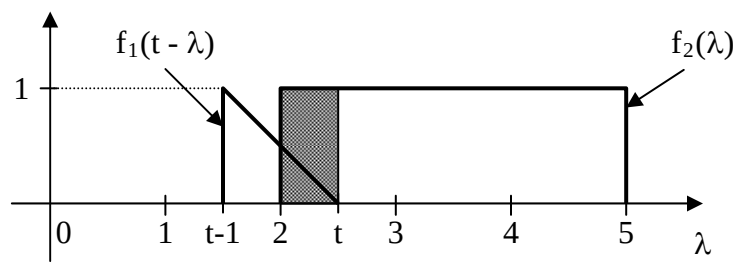

(d)

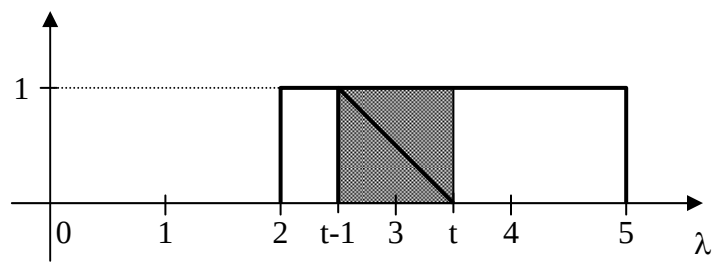

(e)

For $3 < t < 5$, $f_1(t-\lambda)$ and $f_2(\lambda)$ overlap as shown in Fig. (e).

$$y(t) = \int_{t-1}^{t} (1)(t-\lambda)\, d\lambda = \left(\lambda t - \frac{\lambda^2}{2}\right)\Big|_{t-1}^{t} = \frac{1}{2}$$

For $5 < t < 6$, the functions overlap as shown in Fig. (f).

$$y(t) = \int_{t-1}^{5} (1)(t-\lambda)\, d\lambda = \left(\lambda t - \frac{\lambda^2}{2}\right)\Big|_{t-1}^{5} = \frac{-1}{2}t^2 + 5t - 12$$

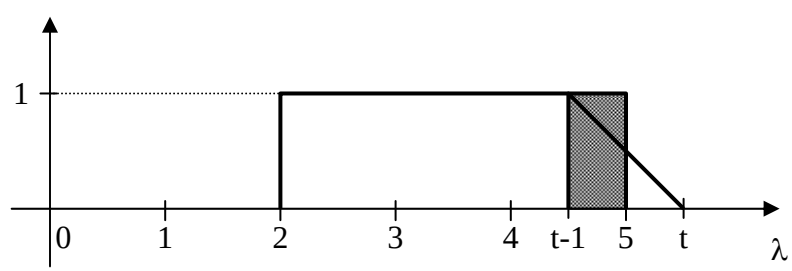

(f)

www.konkur.in

Therefore,

$$y(t) = \begin{cases} (t^2/2) - 2t + 2, & 2 < t < 3 \\ 1/2, & 3 < t < 5 \\ -(t^2/2) + 5t - 12, & 5 < t < 6 \\ 0, & \text{otherwise} \end{cases}$$

www.konkur.in

Chapter 15, Solution 45.

$$y(t) = h(t) * x(t) = \left[4e^{-2t}u(t)\right] * \left[\delta(t) - 2e^{-2t}u(t)\right]$$

$$= 4e^{-2t}u(t) * \delta(t) - 4e^{-2t}u(t) * 2e^{-2t}u(t) = 4e^{-2t}u(t) - 8e^{-2t}\int_0^t e^o d\lambda$$

$$= \underline{4e^{-2t}u(t) - 8te^{-2t}u(t)}$$

www.konkur.in

Chapter 15, Solution 46.

(a) $x(t)*y(t) = 2\delta(t)*4u(t) = \underline{8u(t)}$

(b) $x(t)*z(t) = 2\delta(t)*e^{-2t}u(t) = \underline{2e^{-2t}u(t)}$

(c) $y(t)*z(t) = 4u(t)*e^{-2t}u(t) = 4\int_0^t e^{-2\lambda}d\lambda = \left.\frac{4e^{-2\lambda}}{-2}\right|_0^t = \underline{2(1-e^{-2t})}$

(d) $y(t)*[y(t)+z(t)] = 4u(t)*[4u(t)+e^{-2t}u(t)] = 4\int[4u(\lambda)+e^{-2\lambda}u(\lambda)]d\lambda$

$$= 4\int_0^t [4+e^{-2\lambda}]d\lambda = 4[4t+\frac{e^{-2\lambda}}{-2}]\Big|_0^t = \underline{16t-2e^{-2t}+2}$$

www.konkur.in

Chapter 15, Solution 47.

(a) $H(s) = \dfrac{s}{(s+1)(s+2)} = \dfrac{A}{s+1} + \dfrac{B}{s+2}$

s=A(s+2) + B(s+1)

We equate the coefficients.

s: 1= A+B

constant: 0 =2A +B

Solving these, A = -1, B= 2.

$$H(s) = \frac{-1}{s+1} + \frac{2}{s+2}$$

$$h(t) = \underline{(-e^{-t} + 2e^{-2t})u(t)}$$

(b) $H(s) = \dfrac{Y(s)}{X(s)} \longrightarrow Y(s) = H(s)X(s) = \dfrac{s}{(s+1)(s+2)}\dfrac{1}{s}$

$$Y(s) = \frac{1}{(s+1)(s+2)} = \frac{C}{s+1} + \frac{D}{s+2}$$

C=1 and D=-1 so that

$$Y(s) = \frac{1}{s+1} - \frac{1}{s+2}$$

$$y(t) = \underline{(e^{-t} - e^{-2t})u(t)}$$

www.konkur.in

Chapter 15, Solution 48.

(a) Let $G(s) = \dfrac{2}{s^2 + 2s + 5} = \dfrac{2}{(s+1)^2 + 2^2}$

$$g(t) = e^{-t}\sin(2t)$$

$$F(s) = G(s)\,G(s)$$

$$f(t) = L^{-1}\left[G(s)\,G(s)\right] = \int_0^t g(\lambda)\,g(t-\lambda)\,d\lambda$$

$$f(t) = \int_0^t e^{-\lambda}\sin(2\lambda)\,e^{-(t-\lambda)}\sin(2(t-\lambda))\,d\lambda$$

$$\sin(A)\sin(B) = \frac{1}{2}\left[\cos(A-B) - \cos(A+B)\right]$$

$$f(t) = \frac{1}{2}e^{-t}\int_0^t e^{-\lambda}\left[\cos(2t) - \cos(2(t-2\lambda))\right]d\lambda$$

$$f(t) = \frac{e^{-t}}{2}\cos(2t)\int_0^t e^{-2\lambda}\,d\lambda - \frac{e^{-t}}{2}\int_0^t e^{-2\lambda}\cos(2t-4\lambda)\,d\lambda$$

$$f(t) = \frac{e^{-t}}{2}\cos(2t)\cdot\frac{e^{-2\lambda}}{-2}\Big|_0^t - \frac{e^{-t}}{2}\int_0^t e^{-2\lambda}\left[\cos(2t)\cos(4\lambda) + \sin(2t)\sin(4\lambda)\right]d\lambda$$

$$f(t) = \frac{1}{4}e^{-t}\cos(2t)\,(-e^{-2t}+1) - \frac{e^{-t}}{2}\cos(2t)\int_0^t e^{-2\lambda}\cos(4\lambda)\,d\lambda$$
$$- \frac{e^{-t}}{2}\sin(2t)\int_0^t e^{-2\lambda}\sin(4\lambda)\,d\lambda$$

$$f(t) = \frac{1}{4}e^{-t}\cos(2t)\,(1-e^{-2t})$$
$$- \frac{e^{-t}}{2}\cos(2t)\left[\frac{e^{-2\lambda}}{4+16}\left(-2\cos(4\lambda) - 4\sin(4\lambda)\right)\right]\Big|_0^t$$
$$- \frac{e^{-t}}{2}\sin(2t)\left[\frac{e^{-2\lambda}}{4+16}\left(-2\sin(4\lambda) + 4\cos(4\lambda)\right)\right]\Big|_0^t$$

www.konkur.in

$$f(t) = \frac{e^{-t}}{2}\cos(2t) - \frac{e^{-3t}}{4}\cos(2t) - \frac{e^{-t}}{20}\cos(2t) + \frac{e^{-3t}}{20}\cos(2t)\cos(4t)$$
$$+ \frac{e^{-3t}}{10}\cos(2t)\sin(4t) + \frac{e^{-t}}{10}\sin(2t)$$
$$+ \frac{e^{-t}}{20}\sin(2t)\sin(4t) - \frac{e^{-t}}{10}\sin(2t)\cos(4t)$$

(b) Let $X(s) = \dfrac{2}{s+1}$, $\qquad Y(s) = \dfrac{s}{s+4}$

$x(t) = 2e^{-t}u(t)$, $\qquad y(t) = \cos(2t)u(t)$

$F(s) = X(s)Y(s)$

$$f(t) = L^{-1}\left[X(s)Y(s)\right] = \int_0^{\infty} y(\lambda)\,x(t-\lambda)\,d\lambda$$
$$f(t) = \int_0^{t} \cos(2\lambda)\cdot 2e^{-(t-\lambda)}\,d\lambda$$
$$f(t) = 2e^{-t}\cdot\frac{e^{\lambda}}{1+4}\left(\cos(2\lambda) + 2\sin(2\lambda)\right)\Big|_0^t$$
$$f(t) = \frac{2}{5}e^{-t}\left[e^{t}\left(\cos(2t) + 2\sin(2t) - 1\right)\right]$$
$$f(t) = \frac{2}{5}\cos(2t) + \frac{4}{5}\sin(2t) - \frac{2}{5}e^{-t}$$

www.konkur.in

Chapter 15, Solution 49.

(a) $t*e^{\alpha t}u(t) =$

$$\int_0^t e^{a\lambda}(t-\lambda)d\lambda = t\frac{e^{a\lambda}}{a}\Big|_0^t - \frac{e^{a\lambda}}{a^2}(a\lambda-1)\Big|_0^t = \underline{\frac{t}{a}(e^{at}-1)-\frac{1}{a^2}-\frac{e^{at}}{a^2}(at-1)}\,u(t)$$

(b) $\cos t * \cos t u(t) = \int_0^t \cos\lambda\cos(t-\lambda)d\lambda = \int_0^t \{\cos t\cos\lambda\cos\lambda + \sin t\sin\lambda\cos\lambda\}d\lambda$

$$= \left[\cos t\int_0^t \frac{1}{2}[1+\cos 2\lambda]d\lambda + \sin t\int_0^t \cos\lambda d(-\cos\lambda)\right] = \left[\frac{1}{2}\cos t[\lambda+\frac{\sin 2\lambda}{2}]\Big|_0^t - \sin t\frac{\cos\lambda}{2}\Big|_0^t\right]$$

=[0.5cos(t)(t+0.5sin(2t)) – 0.5sin(t)(cos(t) – 1)]u(t).

www.konkur.in

Chapter 15, Solution 50.

Take the Laplace transform of each term.

$$\left[s^2\,V(s) - s\,v(0) - v'(0)\right] + 2\left[s\,V(s) - v(0)\right] + 10\,V(s) = \frac{3s}{s^2+4}$$

$$s^2\,V(s) - s + 2 + 2s\,V(s) - 2 + 10\,V(s) = \frac{3s}{s^2+4}$$

$$(s^2 + 2s + 10)\,V(s) = s + \frac{3s}{s^2+4} = \frac{s^3+7s}{s^2+4}$$

$$V(s) = \frac{s^3+7s}{(s^2+4)(s^2+2s+10)} = \frac{As+B}{s^2+4} + \frac{Cs+D}{s^2+2s+10}$$

$$s^3 + 7s = A\,(s^3 + 2s^2 + 10s) + B\,(s^2 + 2s + 10) + C\,(s^3 + 4s) + D\,(s^2 + 4)$$

Equating coefficients :

s^3: $\quad 1 = A + C \quad \longrightarrow \quad C = 1 - A$

s^2: $\quad 0 = 2A + B + D$

s^1: $\quad 7 = 10A + 2B + 4C = 6A + 2B + 4$

s^0: $\quad 0 = 10B + 4D \quad \longrightarrow \quad D = -2.5B$

Solving these equations yields

$$A = \frac{9}{26}, \qquad B = \frac{12}{26}, \qquad C = \frac{17}{26}, \qquad D = \frac{-30}{26}$$

$$V(s) = \frac{1}{26}\left[\frac{9s+12}{s^2+4} + \frac{17s-30}{s^2+2s+10}\right]$$

$$V(s) = \frac{1}{26}\left[\frac{9s}{s^2+4} + 6\cdot\frac{2}{s^2+4} + 17\cdot\frac{s+1}{(s+1)^2+3^2} - \frac{47}{(s+1)^2+3^2}\right]$$

$$v(t) = \mathbf{\frac{9}{26}\cos(2t) + \frac{6}{26}\sin(2t) + \frac{17}{26}e^{-t}\cos(3t) - \frac{47}{78}e^{-t}\sin(3t)}$$

www.konkur.in

Chapter 15, Solution 51.

Taking the Laplace transform of the differential equation yields

$$\left[s^2V(s) - sv(0) - v'(0)\right] + 5\left[sV(s) - v(0)\right] + 6V(s) = \frac{10}{s+1}$$

or $\left(s^2 + 5s + 6\right)V(s) - 2s - 4 - 10 = \dfrac{10}{s+1} \quad \longrightarrow \quad V(s) = \dfrac{2s^2 + 16s + 24}{(s+1)(s+2)(s+3)}$

Let $V(s) = \dfrac{A}{s+1} + \dfrac{B}{s+2} + \dfrac{C}{s+3}, \quad A = 5, \quad B = 0, \quad C = -3$

Hence,

$$v(t) = \left(\mathbf{5e^{-t} - 3e^{-3t}}\right)\mathbf{u(t)}.$$

www.konkur.in

Chapter 15, Solution 52.

Take the Laplace transform of each term.

$$\left[s^2 I(s) - s\,i(0) - i'(0)\right] + 3\left[s\,I(s) - i(0)\right] + 2\,I(s) + 1 = 0$$

$$(s^2 + 3s + 2)\,I(s) - s - 3 - 3 + 1 = 0$$

$$I(s) = \frac{s+5}{(s+1)(s+2)} = \frac{A}{s+1} + \frac{B}{s+2}$$

$$A = 4, \qquad B = -3$$

$$I(s) = \frac{4}{s+1} - \frac{3}{s+2}$$

$$i(t) = \mathbf{(4e^{-t} - 3e^{-2t})u(t)}$$

www.konkur.in

Chapter 15, Solution 53.

Transform each term.

We begin by noting that the integral term can be rewritten as,

$\int_0^t x(\lambda)e^{-(t-\lambda)}d\lambda$ which is convolution and can be written as $e^{-t}*x(t)$.

Now, transforming each term produces,

$$X(s) = \frac{s}{s^2+1} + \frac{1}{s+1}X(s) \rightarrow \left(\frac{s+1-1}{s+1}\right)X(s) = \frac{s}{s^2+1}$$

$$X(s) = \frac{s+1}{s^2+1} = \frac{s}{s^2+1} + \frac{1}{s^2+1}$$

$$x(t) = \mathbf{\cos(t) + \sin(t)}.$$

If partial fraction expansion is used we obtain,

$$x(t) = \mathbf{1.4142\cos(t–45^\circ)}.$$

This is the same answer and can be proven by using trigonometric identities.

www.konkur.in

Chapter 15, Solution 54.

Design a problem to help other students to better understand solving second order differential equations with a time varying input.

Although there are many ways to solve this problem, this is an example based on the same kind of problem asked in the third edition.

Problem

Using Laplace transform, solve the following differential equation for t >0

$$\frac{d^2i}{dt^2}+4\frac{di}{dt}+5i=2e^{-2t}$$

subject to i(0)=0, i'(0)=2.

Solution

Taking the Laplace transform of each term gives

$$\left[s^2I(s)-si(0)-i'(0)\right]+4\left[sI(s)-i(0)\right]+5I(s)=\frac{2}{s+2}$$

$$\left[s^2I(s)-0-2\right]+4\left[sI(s)-0\right]+5I(s)=\frac{2}{s+2}$$

$$I(s)(s^2+4s+5)=\frac{2}{s+2}+2=\frac{2s+6}{s+2}$$

$$I(s)=\frac{2s+6}{(s+2)(s^2+4s+5)}=\frac{A}{s+2}+\frac{Bs+C}{s^2+4s+5}$$

$$2s+6=A(s^2+4s+5)+B(s^2+2s)+C(s+2)$$

We equate the coefficients.

s^2 : 0 = A+ B
s: 2= 4A + 2B + C
constant: 6 = 5A + 2C

Solving these gives
A = 2, B= -2, C = -2

$$I(s)=\frac{2}{s+2}-\frac{2s+2}{s^2+4s+5}=\frac{2}{s+2}-\frac{2(s+2)}{(s+2)^2+1}+\frac{2}{(s+2)^2+1}$$

www.konkur.in

Taking the inverse Laplace transform leads to:

$$i(t) = \left(2e^{-2t} - 2e^{-2t}\cos t + 2e^{-2t}\sin t\right)u(t) = \underline{2e^{-2t}(1-\cos t+\sin t)u(t)}$$

www.konkur.in

Chapter 15, Solution 55.

Take the Laplace transform of each term.

$$\left[s^3\,Y(s) - s^2\,y(0) - s\,y'(0) - y''(0)\right] + 6\left[s^2\,Y(s) - s\,y(0) - y'(0)\right]$$
$$+8\left[s\,Y(s) - y(0)\right] = \frac{s+1}{(s+1)^2 + 2^2}$$

Setting the initial conditions to zero gives

$$(s^3 + 6s^2 + 8s)\,Y(s) = \frac{s+1}{s^2 + 2s + 5}$$

$$Y(s) = \frac{(s+1)}{s\,(s+2)(s+4)(s^2+2s+5)} = \frac{A}{s} + \frac{B}{s+2} + \frac{C}{s+4} + \frac{Ds+E}{s^2+2s+5}$$

$$A = \frac{1}{40}, \qquad B = \frac{1}{20}, \qquad C = \frac{-3}{104}, \qquad D = \frac{-3}{65}, \qquad E = \frac{-7}{65}$$

$$Y(s) = \frac{1}{40}\cdot\frac{1}{s} + \frac{1}{20}\cdot\frac{1}{s+2} - \frac{3}{104}\cdot\frac{1}{s+4} - \frac{1}{65}\cdot\frac{3s+7}{(s+1)^2+2^2}$$

$$Y(s) = \frac{1}{40}\cdot\frac{1}{s} + \frac{1}{20}\cdot\frac{1}{s+2} - \frac{3}{104}\cdot\frac{1}{s+4} - \frac{1}{65}\cdot\frac{3(s+1)}{(s+1)^2+2^2} - \frac{1}{65}\cdot\frac{4}{(s+1)^2+2^2}$$

$$y(t) = \left(\mathbf{\frac{1}{40} + \frac{1}{20}e^{-2t} - \frac{3}{104}e^{-4t} - \frac{3}{65}e^{-t}\cos(2t) - \frac{2}{65}e^{-t}\sin(2t)}\right)\mathbf{u(t)}$$

www.konkur.in

Chapter 15, Solution 56.

Taking the Laplace transform of each term we get:

$$4\left[s\,V(s) - v(0)\right] + \frac{12}{s}V(s) = 0$$

$$\left[4s + \frac{12}{s}\right]V(s) = 8$$

$$V(s) = \frac{8s}{4s^2 + 12} = \frac{2s}{s^2 + 3}$$

$$v(t) = \mathbf{2\cos\left(\sqrt{3}t\right)}$$

www.konkur.in

Chapter 15, Solution 57.

Although there is no correct way to work this problem, this is an example based on the same kind of problem asked in the third edition.

Problem

Solve the following integrodifferential equation using the Laplace transform method:

$$\frac{dy(t)}{dt} + 9\int_0^t y(t)dt = \cos 2t, \qquad y(0) = 1$$

Solution

Take the Laplace transform of each term.

$$\left[\, s\,Y(s) - y(0)\right] + \frac{9}{s}Y(s) = \frac{s}{s^2+4}$$

$$\left(\frac{s^2+9}{s}\right)Y(s) = 1 + \frac{s}{s^2+4} = \frac{s^2+s+4}{s^2+4}$$

$$Y(s) = \frac{s^3+s^2+4s}{(s^2+4)(s^2+9)} = \frac{As+B}{s^2+4} + \frac{Cs+D}{s^2+9}$$

$$s^3+s^2+4s = A(s^3+9s) + B(s^2+9) + C(s^3+4s) + D(s^2+4)$$

Equating coefficients :

s^0 : $\quad 0 = 9B + 4D$

s^1 : $\quad 4 = 9A + 4C$

s^2 : $\quad 1 = B + D$

s^3 : $\quad 1 = A + C$

Solving these equations gives

$$A = 0, \qquad B = -4/5, \qquad C = 1, \qquad D = 9/5$$

$$Y(s) = \frac{-4/5}{s^2+4} + \frac{s+9/5}{s^2+9} = \frac{-4/5}{s^2+4} + \frac{s}{s^2+9} + \frac{9/5}{s^2+9}$$

$$y(t) = [\,\mathbf{-0.4\sin(2t) + \cos(3t) + 0.6\sin(3t)}\,]\mathbf{u(t)}$$

www.konkur.in

Chapter 15, Solution 58.

We take the Laplace transform of each term.

$$[sV(s)-v(0)]+2V(s)+\frac{5}{s}V(s)=\frac{4}{s}$$

$$[sV(s)+1]+2V(s)+\frac{5}{s}V(s)=\frac{4}{s} \quad \longrightarrow \quad V(s)=\frac{4-s}{s^2+2s+5}$$

$$V(s)=\frac{-(s+1)+5}{(s+1)^2+2^2}=\frac{-(s+1)}{(s+1)^2+2^2}+5/2\,\frac{2}{(s+1)^2+2^2}$$

$$v(t)=\underline{(-e^{-t}\cos 2t+2.5e^{-t}\sin 2t)u(t)}$$

www.konkur.in

Chapter 15, Solution 59.

Take the Laplace transform of each term of the integrodifferential equation.

$$\left[s\,Y(s) - y(0)\right] + 4\,Y(s) + \frac{3}{s}Y(s) = \frac{6}{s+2}$$

$$(s^2 + 4s + 3)\,Y(s) = s\left(\frac{6}{s+2} - 1\right)$$

$$Y(s) = \frac{s\,(4-s)}{(s+2)(s^2+4s+3)} = \frac{(4-s)\,s}{(s+1)(s+2)(s+3)}$$

$$Y(s) = \frac{A}{s+1} + \frac{B}{s+2} + \frac{C}{s+3}$$

A = –2.5, B = 12, C = -10.5

$$Y(s) = \frac{-2.5}{s+1} + \frac{12}{s+2} - \frac{10.5}{s+3}$$

$$y(t) = \mathbf{[-2.5e^{-t} + 12e^{-2t} - 10.5e^{-3t}]u(t)}$$

www.konkur.in

Chapter 15, Solution 60.

Take the Laplace transform of each term of the integrodifferential equation.

$$2\left[s\,X(s)-x(0)\right]+5\,X(s)+\frac{3}{s}X(s)+\frac{4}{s}=\frac{4}{s^2+16}$$

$$(2s^2+5s+3)\,X(s)=2s-4+\frac{4s}{s^2+16}=\frac{2s^3-4s^2+36s-64}{s^2+16}$$

$$X(s)=\frac{2s^3-4s^2+36s-64}{(2s^2+5s+3)(s^2+16)}=\frac{s^3-2s^2+18s-32}{(s+1)(s+1.5)(s^2+16)}$$

$$X(s)=\frac{A}{s+1}+\frac{B}{s+1.5}+\frac{Cs+D}{s^2+16}$$

$$A=(s+1)\,X(s)\Big|_{s=-1}=-6.235$$
$$B=(s+1.5)\,X(s)\Big|_{s=-1.5}=7.329$$

When $s=0$,

$$\frac{-32}{(1.5)(16)}=A+\frac{B}{1.5}+\frac{D}{16}\quad\longrightarrow\quad D=0.2579$$

$$s^3-2s^2+18s-32=A(s^3+1.5s^2+16s+24)+B(s^3+s^2+16s+16)$$
$$+C(s^3+2.5s^2+1.5s)+D(s^2+2.5s+1.5)$$

Equating coefficients of the s^3 terms,

$$1=A+B+C\quad\longrightarrow\quad C=-0.0935$$

$$X(s)=\frac{-6.235}{s+1}+\frac{7.329}{s+1.5}+\frac{-0.0935s+0.2579}{s^2+16}$$

$$x(t)=\mathbf{-6.235\,e^{-t}+7.329\,e^{-1.5t}-0.0935\cos(4t)+0.0645\sin(4t)}$$

www.konkur.in

Chapter 16, Solution 61.

Solve the following differential equations subject to the specified initial conditions

(a) $d^2v/dt^2 + 4v = 12$, $v(0) = 0$, $dv(0)/dt = 2$

(b) $d^2i/dt^2 + 5di/dt + 4i = 8$, $i(0) = -1$, $di(0)/dt = 0$

(c) $d^2v/dt^2 + 2dv/dt + v = 3$, $v(0) = 5$, $dv(0)/dt = 1$

(d) $d^2i/dt^2 + 2di/dt + 5i = 10$, $i(0) = 4$, $di(0)/dt = -2$

8.29

Solution

(a) Converting into the s-domain we get

$s^2V(s)–sv(0^–)–v'(0^–)+4V(s) = 12/s = s^2V(s)–s0–2+4V(s)$ or
$(s^2+4)V(s) = 2+12/s = 2(s+6)/s$ or $V(s) = 2(s+6)/[s(s+j2)(s–j2)]$
$= [A/s] + [B/(s+j2)] + [C/(s–j2)]$ where $A = 12/4 = 3$, $B = 2(–j2+6)/[–j2(–j4)]$
$= 2(6.325\angle–18.43^\circ)/(8\angle180^\circ) = 1.5812\angle161.57^\circ$ and C
$= s(j2+6)/[j2(j4)] = 2(6.325\angle18.43^\circ)/(8\angle180^\circ) = 1.5812\angle–161.57^\circ$

$v(t) = [3+1.5812e^{161.57^\circ}e^{–j2t}+1.5812e^{–161.57^\circ}e^{j2t}]u(t)$ volts
= **$[3+3.162\cos(2t–161.12^\circ)]u(t)$ volts**.

(b) Converting into the s-domain we get

$s^2I(s)–si(0^–)–i'(0^–)+5sI(s)–5i(0^–)+4I(s) = 8/s$
$= s^2I(s)–s(–1)–0+5sI(s)–5(–1)+4I(s)$ or
$(s^2+5s+4)I(s) = (–s–5) + 8/s = –(s^2+5s–8)/s$
$I(s) = –(s^2+5s–8)/[s(s+1)(s+4)] = [A/s] + [B/(s+1)] + [C/(s+4)]$ where
$A = 8/[(1)(4)] = 2$; $B = –[(–1)^2+5(–1)–8]/[(–1)(–1+4)] = 12/(–3) = –4$;
$C = –[(–4)^2+5(–4)–8]/[(–4)(–4+1)] = 12/(12) = 1$ therefore

$i(t) =$ **$[2–4e^{–t}+e^{–4t}]u(t)$ amps**.

(c) $s^2V(s)–sv(0^–)–v'(0^–)+2sV(s)–2v(0^–)+V(s) = 3/s$
$= s^2V(s)–s5–1+2sV(s)–2x5+V(s) = (s^2+2s+1)V(s) – (5s+11)$ or
$(s^2+2s+1)V(s) = (5s+11) + 3/s = (5s^2+11s+3)/s$ or
$V(s) = (5s^2+11s+3)/[s(s+1)^2] = [A/s] + [B/(s+1)] + [C/(s+1)^2]$ where
$A = 3$; $C = [5(–1)^2+11(–1)+3]/(–1) = (–3)/(–1) = 3$; going back to the original and eliminating the denominators we get $5s^2+11s+3 = 3(s^2+2s+1)+Bs^2+Bs+3s$ or $B = 2$, thus,
$v(t) =$ **$[3+2e^{–t}+3te^{–t}]u(t)$ volts**.

www.konkur.in

(d) $s^2I(s)–si(0^–)–i'(0^–)+2sI(s)–2i(0^–)+5I(s) = 10/s$

$= s^2I(s)–s(4)–(–2)+2sI(s)–2(4)+5I(s)$ or
$(s^2+2s+5)I(s) – (4s–2+8) = 10/s$ or $(s^2+2s+5)I(s) = (4s^2+6s+10)/s$ or

$I(s) = (4s^2+6s+10)/[s(s+1+j2)(s+1–j2)] = [A/s] + [B/(s+1+j2)] + [C/(s+1–j2)]$
where $A = 10/5 = 2$; $B = [4(–1–j2)^2+6(–1–j2)+10]/[(–1–j2)(–j4)]$
$= [4(1+j4–4)–6–j12+10]/[–8+j4] = [–12+j16–6–j12+10]/(8.944\angle 153.43^\circ)$
$= [–8+j4]/(8.944\angle 153.43^\circ) = 1$; $C = [4(–1+j2)^2+6(–1+j2)+10]/[(–1+j2)(j4)]$
$= [4(1–j4–4)–6+j12+10]/[–8–j4] = [–12–j16–6+j12+10]/(8.944\angle –153.43^\circ)$
$= [–8–j4]/(8.944\angle 153.43^\circ) = 1$ thus

$i(t) = [2+e^{-t}e^{-j2t}+ e^{-t}e^{j2t}]u(t)$ amps = **$[2+2e^{-t}\cos(2t)]u(t)$ amps**.

(a) **$[3+3.162\cos(2t–161.12^\circ)]u(t)$ volts**, (b) **$[2–4e^{-t}+e^{-4t}]u(t)$ amps**,
(c) **$[3+2e^{-t}+3te^{-t}]u(t)$ volts**, (d) **$[2+2e^{-t}\cos(2t)]u(t)$ amps**

www.konkur.in

Chapter16, Solution 1.

The current in an *RLC* circuit is described by

$$\frac{d^2i}{dt^2} + 10\frac{di}{dt} + 25i = 0$$

If $i(0) = 2$ and $di(0)/dt = 0$, find $i(t)$ for $t > 0$.

Solution

Step 1. Transform the equation into the s-domain and solve for I(s).

$s^2I(s) - (di(0^-)/dt) - si(0^-) + 10sI(s) - 10i(0^-) + 25\,I(s) = 0$

$(s^2+10s+25)I(s) + [-(di(0^-)/dt) - si(0^-) - 10i(0^-)] = 0$

$(s^2+10s+25)I(s) + [-2s-20] = 0$ or $(s^2+10s+25)I(s) = 2(s+10)$ or

$I(s) = 2(s+10)/\,(s^2+10s+25)$

Step 2. Perform a partial fraction expansion and then solve for i(t) in the time domain.

$s^2 + 10s + 25 = 0$, thus $s_{1,2} = \dfrac{-10 \pm \sqrt{10-10}}{2} = -5$, repeated roots.

$I(s) = 2(s+10)/(s+5)^2 = A/(s+5) + B/(s+5)^2 = (As+A5+B)/(s+5)^2$ or

$A = 2$ and $5A+B = 20$ or $B = 20 - 10 = 10$ or

$I(s) = 2/(s+5) + 10/(s+5)^2$ or

$$i(t) = \mathbf{[(2+10t)e^{-5t}]u(t)\ A}$$

www.konkur.in

Chapter 16, Solution 2.

The differential equation that describes the voltage in an *RLC* network is

$$\frac{d^2v}{dt^2} + 5\frac{dv}{dt} + 4v = 0$$

Given that $v(0) = 0$, $dv(0)/dt = 5$, obtain $v(t)$.

Solution

Step 1. Transform the equation into the s-domain and solve for V(s).

$s^2V(s) - (dv(0^-)/dt) - sv(0^-) + 5sV(s) - 5v(0^-) + 4V(s) = 0$ or

$(s^2 + 5s + 4)V(s) - 5 = 0$ or $V(s) = 5/(s^2+5s+4)$

Step 2. Perform a partial fraction expansion of V(s) and then solve for v(t).

$$s^2 + 5s + 4 = 0, \text{ thus } s_{1,2} = \frac{-5 \pm \sqrt{25-16}}{2} = -4, -1.$$

Thus, $V(s) = 5/[(s+1)(s+4)] = A/(s+1) + B/(s+4)$ where $A = 5/3$ and $B = -5/3$

Thus,

$$v(t) = \mathbf{[(5/3)e^{-t} - (5/3)e^{-4t}]u(t)\ V}$$

www.konkur.in

Chapter 16, Solution 3.

The natural response of an *RLC* circuit is described by the differential equation

$$\frac{d^2v}{dt^2} + 2\frac{dv}{dt} + v = 0$$

for which the initial conditions are v(0) = 20 V and dv(0)/dt = 0. Solve for v(t).

Solution

Step 1. Transform the equation into the s-domain and solve for v(t).

$s^2V(s) - (dv(0^-)/dt) - sv(0^-) + 2sV(s) - 2v(0^-) + V(s) = 0$ or

$(s^2+2s+1)V(s) - 20s - 40 = 0$ or $V(s) = 20(s+2)/(s^2+2s+1)$

Step 2. Perform a partial fraction expansion and solve for V(s). Inverse transform into the time-domain and solve for v(t).

$s^2 + 2s + 1 = 0$, thus $s_{1,2} = \dfrac{-2 \pm \sqrt{4-4}}{2} = -1$, repeated roots.

$V(s) = 20(s+2)/(s^2+2s+1) = 20(s+2)/(s+1)^2 = A/(s+1) + B/(s+1)^2$

$As+A+B = 20s+40$ or $A = 20$ and $A+B = 40 = 20 + B$ or $B = 40 - 20 = 20$

Thus,

$$v(t) = \mathbf{[(20 + 20t)e^{-t}]u(t)\ V}$$

www.konkur.in

Chapter 16, Solution 4.

If R = 20 Ω, L = 0.6 H, what value of C will make an RLC series circuit:

(a) overdamped,
(b) critically damped,
(c) underdamped?

Solution

Step 1. Since we are working with a series RLC circuit, we can express our values in terms of I(s) and the s equation that multiplies it in the s-domain. From here we can easily find the values that produce over damped, critically damped, and underdamped conditions.

Equating the mesh equation we get, RI(s) + LsI(s) + (1/C)I(s)/s – V(s) = 0 or

(0.6s + 20 + 1/(Cs))I(s) = V(s) or [s^2+(20/0.6)+(1/(0.6Cs)]I(s) = V(s)/0.6 or

[s^s+(20/0.6)s+1/(0.6C)]I(s) = sV(s)/0.6

The roots for the denominator are $s_{1,2} = \dfrac{-(20/0.6) \pm \sqrt{(400/0.36) - 4/(0.6C)}}{2}$.

Step 2. To find the values of our roots that produces overdamped, critically damped, and underdamped conditions, we note that when s_1 and s_2 values that produces these values,

overdamped is when s_1 and s_2 are real with no complex values
critically damped is when $s_1 = s_2$
underdamped is when both s_1 and s_2 have complex roots and $s_1 = s_2^*$

Now all we need to do is to solve for these conditions.

(a) Overdamped is when [4/(0.6C)] is less than 400/0.36 or C > 4x0.36/(400x0.6) = $6\text{x}10^{-3}$, or C > **6 mF**

(b) Critically damped is when [4/(0.6C)] is equal to 400/0.36 or C = 4x0.36/(400x0.6) = $6\text{x}10^{-3}$ = **6 mF**

(c) Underdamped is when [4/(0.6C)] is greater than 400/0.36 or C < 4x0.36/(400x0.6) = $6\text{x}10^{-3}$ or C < **6mF**

www.konkur.in

Chapter 16, Solution 5.

The responses of a series *RLC* circuit are

$$v_C(t) = [30 - 10e^{-20t} + 30e^{-10t}]u(t) \text{ V}$$

$$i_L(t) = [40e^{-20t} - 60e^{-10t}]u(t) \text{ mA}$$

where $v_C(t)$ and $i_L(t)$ are the capacitor voltage and inductor current, respectively. Determine the values of *R*, *L*, and *C*.

Solution

Step 1. We can start with the generalized mesh equation for a series RLC network. We can lump the initial conditions ($v_C(0)$ = 30–10+30 = 50 volts and $i_L(0)$ = 40–60 = 20 amps) with the source in the loop since all we are currently after are the values of R, L, and C.

$RI(s) + Ls(I(s)+20/s) + (1/C)I(s)/s - 50/s - V(s) = 0$ or $[s^2 + (R/L)s + 1/(LC)]I(s) = (V(s)/L) - 20 + 50/(Ls)$

Step 2. The values of R, L, and C will come from the roots of the denominator s equation. We already know that they are equal to –10 and –20. We note however, that this will give us only two equations. Obviously we need a third, and that will come from knowing the current through the capacitor and the voltage across it.

$$s_{1,2} = \frac{-(R/L) \pm \sqrt{(R/L)^2 - 4/(LC)}}{2} = -10, -20$$

We can simplify our effort by noting that $s_1 + s_2 = -R/L[(1/2)+(1/2)] = -30$ or $R = 30L$.

Next, $s_1 - s_2 = \dfrac{2\sqrt{(R/L)^2 - 4/(LC)}}{2} = 10$ or $(R/L)^2 - 4/(LC) = 100$. Since $(R/L) = 30$, we then get $900 - 100 = 4/(LC)$ or $LC = 4/800 = 1/200$.

Now we work with $i_C(t) = Cdv_C(t)/dt$ or $40e^{-20t} - 60e^{-10t}$ mA = $C[200e^{-20t} - 300e^{-10t}]$ V or $C = 0.2\text{x}10^{-3}$ = **200 μF**. Since LC = 1/200 then L = $1/(200\text{x}200\text{x}10^{-6}) = 1/0.04$ = **25 H**. Finally R = 30L = 30x25 = **750 Ω**.

750 Ω, 25 H, 200 μF

www.konkur.in

Chapter 16, Solution 6.

Design a parallel RLC circuit that has the characteristic equation

$$.s^2+100s+10^6 = 0.$$

Solution

Step 1. Develop a general equation for a parallel RLC circuit with initial conditions lumped into a parallel current source i(t).

$$[Cs + (1/R) + (1/(Ls))]V(s) - I(s) = 0 \text{ or } [s^2+(1/(RC))s+1/(LC)]V(s) = sI(s)/C$$

Step 2. The next step is to equate the unknowns to the parameters in the characteristic equation. This does become a design problem in that we have two equations with three unknowns. We need to pick one of the values so that the other values are realistic.

$1/(RC) = 100$ and $1/(LC) = 10^6$ or $RC = 0.01$ and $LC = 10^{-6}$. We can start with some values of R and see what happens to the values of L and C.

R	**L**	**C**
1 Ω	100 μH	10 mF
10 Ω	1 mH	1 mF
100 Ω	10 mH	100 μF
1 k Ω	100 mH	10 μF
10 k Ω	1 H	1 μF
100 k Ω	10 H	0.1 μF

We now need to pick reasonable values, R = **10 kΩ**, L = **1 H**, and C = **1 μF** represents an acceptable set since their values are relatively common and inexpensive.

www.konkur.in

Chapter 16, Solution 7.

The step response of an *RLC* circuit is given by

$$\frac{d^2i}{dt^2} + 2\frac{di}{dt} + 5i = 10$$

Given that $i(0) = 6$ and $di(0)/dt = 12$, solve for $i(t)$.

Solution

Step 1. We start by transforming the equation into the s-domain. We then solve for I(s).

$s^2I(s) - (di(0^-)/dt) - si(0^-) + 2sI(s) - 2i(0^-) + 5\,I(s) = 10/s$ or

$s^2I(s) - (12) - 6s + 2sI(s) - 2x6 + 5I(s) = 10/s = (s^2+2s+5)I(s) - 6(s+4)$ or

$(s^2+2s+5)I(s) = [6(s^2+4s)+10]/s$ or $I(s) = [6(s^2+4s)+10]/[s(s^2+2s+5)]$

Step 2. We need to find the roots of (s^2+2s+5) and then perform a partial fraction expansion and then transform back into the time domain and realize i(t).

$s^2 + 2s + 5$, has the roots $s_{1,2} = \dfrac{-2 \pm \sqrt{4-20}}{2} = -1 \pm j2$

$I(s) = [6(s^2+4s)+10]/[s(s+1+j2)(s+1-j2)] = [A/s] + [B/(s+1+j2)] + [C/(s+1-j2)]$

$A = 10/5 = 2$; $B = [6(1+j4-4-4-j8)+10]/[(-1-j2)(-j4)] = [6(-7-j4)+10]/[-8+j4] =$

$(-32-j24)/[4(-2+j)] = 4(-8-j6)/[4(-2+j)] = 2(-4-j3)/(-2+j) =$

$[2(-4-j3)(-2-j)]/[(-2+j)(-2-j)] = 2(8-3+j6+j4)/5 = 2(1+j2)$; $C =$

$[6(1-j4-4-4+j8)+10]/[(-1+j2)(j4)] = [6(-7+j4)+10]/[-8-j4] =$

$(-32+j24)/[4(-2-j)] = 4(-8+j6)/[4(-2-j)] = 2(-4+j3)/(-2-j) =$

$[2(-4+j3)(-2+j)]/[(-2-j)(-2+j)] = 2(8-3-j6-j4)/5 = 2(1-j2)$.

$I(s) = [2/s] + [(2+j4)/(s+1+j2)] + [(2-j4)/(s+1-j2)]$ or

$$i(t) = \mathbf{[2+4e^{-t}(\cos(2t)+2\sin(2t))]u(t)\ A}$$

www.konkur.in

Chapter 16, Solution 8.

A branch voltage in an *RLC* circuit is described by

$$\frac{d^2v}{dt^2} + 4\frac{dv}{dt} + 8v = 48$$

If the initial conditions are $v(0) = 0 = dv(0)/dt$, find $v(t)$.

Solution

Step 1. First we transform the equation into the s-domain. Then we solve for V(s).

$$s^2V(s) - (dv(0^-)/dt) - sv(0^-) + 4sV(s) - 4v(0^-) + 8V(s) = 48/s \text{ or}$$

$$s^2V(s) + 4sV(s) + 8V(s) = 48/s = (s^2+5s+8)V(s) \text{ or}$$

$$V(s) = 48/[s(s^2+4s+8)]$$

Step 2. Now we need to solve for the roots of the denominator and perform a partial fraction expansion. Then we can inverse transform the answer back into the time domain.

$s^2 + 4s + 8$ has the roots $s_{1,2} = \dfrac{-4 \pm \sqrt{16-32}}{2} = -2 \pm j2$ thus,

$V(s) = 48/[s(s+2+j2)(s+2-j2)] = [A/s] + [B/(s+2+j2)] + [C/(s+2-j2)]$

where $A = 48/4 = 6$; $B = 48/[(-2-j2)(-j4)] = 48/(-8+j8) = 48(-1-j)/[8(-1+j)(-1-j)] = 6(-1-j)/2 = 3(-1-j)$; and $C = 48/[(-2+j2)(j4)] = 48/(-8-j8) = 48(-1+j)/[8(-1-j)(-1+j)] = 6(-1+j)/2 = 3(-1+j)$.

Therefore, $V(s) = [8/s] + [3(-1-j)/(s+2+j2)] + [3(-1+j)/(s+2-j2)]$

$$v(t) = \mathbf{[6 - 6e^{-2t}(\cos 2t + \sin 2t)]u(t) \text{ volts}}$$

www.konkur.in

Chapter 16, Solution 9.

A series RLC circuit is described by

$$L\frac{d^2i(t)}{dt} + R\frac{di(t)}{dt} + \frac{i(t)}{C} = 2$$

Find the response when L = 0.5 H, R = 4 Ω, and C = 0.2 F. Let $i(0^-) = 1$ A and $[di(0^-)/dt] = 0$.

Solution

Step 1. First transform the equation into the s-domain. Then solve for I(s).

$0.5s^2I(s) – 0.5(di(0^-)/dt) – 0.5si(0^-) + 4sI(s) – 4i(0^-) + 5I(s) = 2/s$ or
$s^2I(s) – s + 8sI(s) – 8 + 10I(s) = 4/s$ or
$(s^2+8s+10)I(s) = s+8+4/s = (s^2+8s+4)/s$ or
$I(s) = (s^2+8s+4)/[s(s^2+8s+10)]$

Step 2. Next we need to find the roots of $(s^2+8s+10)$ and then perform a partial fraction expansion and then inverse transform back into the time domain.

$s_{1,2} = –1.5505$ and $–6.45$

$(s^2+8s+2)/[s(s^2+8s+10)] = [A/s] + [B/(s+1.5505)] + [C/(s+6.45)]$

A = 0.4; B = 0.7898; and C = –0.1898 thus,

$I(s) = [0.4/s] + [0.7898/(s+1.5505)] + [–0.1898/(s+6.45)]$ and

$$i(t) = \mathbf{[400+789.8e^{-1.5505t}–189.8e^{-6.45t}]\ mA}.$$

www.konkur.in

Chapter 16, Solution 10.

The step responses of a series RLC circuit are

$$v_c = 40 - 10e^{-2000t} - 10e^{-4000t} \text{ V}, \ t>0$$
$$i_L(t) = 3e^{-2000t} + 6e^{-4000t} \text{ mA}, \ t>0$$

(a) Find C. (b) Determine what type of damping exhibited by the circuit.

Solution

(a) $$i_L(t) = i_C(t) = C\frac{dv_o}{dt} \quad (1)$$

$$\frac{dv}{dt} = 2000x10e^{-2000t} + 4000x10e^{-4000t} = 2x10^4(e^{-2000t} + 2e^{-4000t}) \quad (2)$$

But $i_L(t) = 3[e^{-2000t} + 2e^{-4000t}]x10^{-3}$ (3)

Substituting (2) and (3) into (1), we get

$$2x10^4 xC = 3x10^{-3} \longrightarrow C = 1.5x10^{-7} = \underline{150 \text{ nF}}$$

(b) Since s_1 = - 2000 and s_2 = - 4000 are real and negative, it is an **overdamped** case.

www.konkur.in

Chapter 16, Solution 11.

The step response of a parallel RLC circuit is

$$v = 10 + 20e^{-300t}(\cos 400t - 2\sin 400t)\text{ V},\ \ t \geq 0$$

when the inductor is 50 mH. Find R and C.

Solution

Step 1. There are different ways to approach this problem so, we will convert everything into the s-domain and then solve for the unknowns. We should also note that the steady-state voltage is 10 volts, then the circuit is a step input voltage across a parallel combination of a capacitor and an inductor all in series with an output resistor.

The nodal equation for this circuit is given by,

$[(V-10/s)/R] + [(V-0)/(0.05s)] + [(V-0)/(1/sC)] + = 0$ or

$[(1/R)+(1/(0.05s))+sC]V = 10/(Rs) = [(20R+RCs^2+s)/(Rs)]V$ or

$V = [10/(Rs)][Rs/(RCs^2+s+20R)] = 10/[(RCs)(s^2+(1/(RC))s+(20/C))]$

Step 2. From the value of v(t) we can determine the value of the roots of the polynomial $(s^2+(1/(RC))s+(20/C)) = (s+300+j400)(s+300-j400)$ thus, $20/C = 300^2+400^2 = 90{,}000 + 160{,}000 = 250{,}000$ or

$$C = 20/250{,}000 = \mathbf{80\ \mu F}$$

and $1/(RC) = 600$ or

$$R = 1/(600\text{x}80\text{x}10^{-6}) = \mathbf{20.83\ \Omega}.$$

www.konkur.in

Chapter 16, Solution 12.

Consider the s-domain form of the circuit which is shown below.

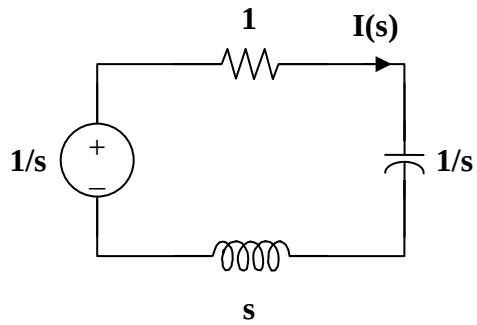

$$I(s) = \frac{1/s}{1+s+1/s} = \frac{1}{s^2+s+1} = \frac{1}{(s+1/2)^2+(\sqrt{3}/2)^2}$$

$$i(t) = \frac{2}{\sqrt{3}} e^{-t/2} \sin\left(\frac{\sqrt{3}}{2} t\right) u(t) \text{ A}$$

$$i(t) = \mathbf{1.155\, e^{-0.5t} \sin(0.866t) u(t)\ A}$$

www.konkur.in

Chapter 16, Solution 13.

Using Fig. 16.36, design a problem to help other students to better understand circuit analysis using Laplace transforms.

Although there are many ways to solve this problem, this is an example based on the same kind of problem asked in the third edition.

Problem

Find v_x in the circuit shown in Fig. 16.36 given $v_s = 4u(t)$ V.

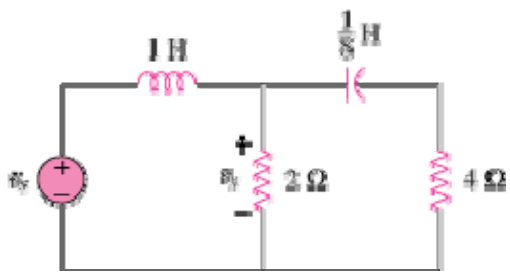

Figure 16.36
For Prob. 16.13.

Solution

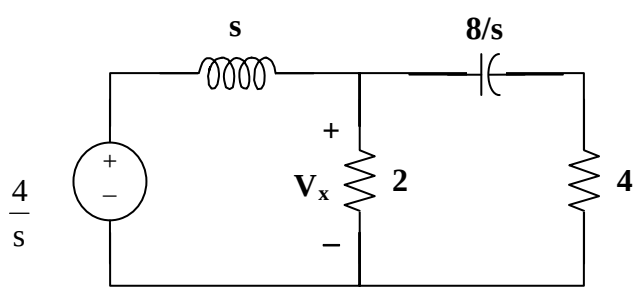

www.konkur.in

$$\frac{V_x - \frac{4}{s}}{s} + \frac{V_x - 0}{2} + \frac{V_x - 0}{4 + \frac{8}{s}} = V_x(4s+8) - \frac{(16s+32)}{s} + (2s^2 + 4s)V_x + s^2 V_x = 0$$

$$V_x(3s^2 + 8s + 8) = \frac{16s+32}{s}$$

$$V_x = 16\frac{s+2}{s(3s^2+8s+8)} = 16\left(\frac{0.25}{s} + \frac{-0.125}{s + \frac{4}{3} + j\frac{\sqrt{8}}{3}} + \frac{-0.125}{s + \frac{4}{3} - j\frac{\sqrt{8}}{3}}\right)$$

$$v_x = \underline{(4 - 2e^{-(1.3333+j0.9428)t} - 2e^{-(1.3333-j0.9428)t})u(t)\,V}$$

$$v_x = \left[\mathbf{4 - 4e^{-4t/3}\cos\left(\frac{2\sqrt{2}}{3}t\right)}\right]\mathbf{u(t)V}$$

www.konkur.in

Chapter 16, Solution 14.

In the s-domain, the circuit becomes that shown below.

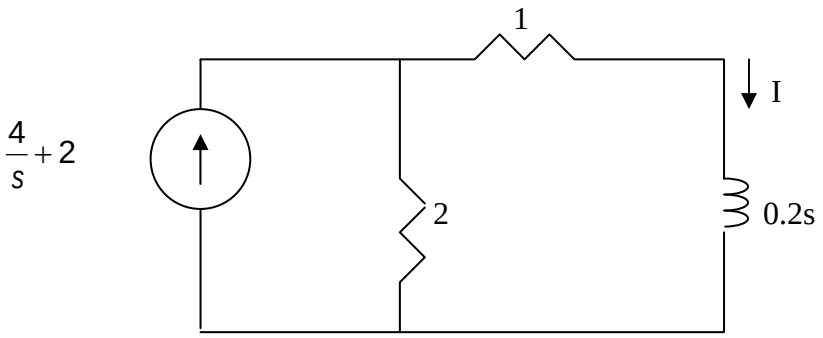

We transform the current source to a voltage source and obtain the circuit shown below.

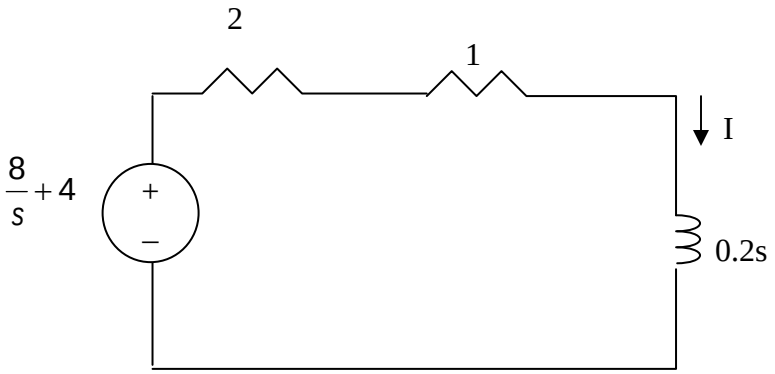

$$I = \frac{\frac{8}{s}+4}{3+0.2s} = \frac{20s+40}{s(s+15)} = \frac{A}{s} + \frac{B}{s+15}$$

$$A = \frac{40}{15} = \frac{8}{3}, \qquad B = \frac{-15x20+40}{-15} = \frac{52}{3}$$

$$I = \frac{8/3}{s} + \frac{52/3}{s+15}$$

i(t) = **[(2.667+17.333e^{-15t}]u(t) A**

www.konkur.in

Chapter 16, Solution 15.

For the circuit in Fig. 16.38, calculate the value of *R* needed to have a critically damped response.

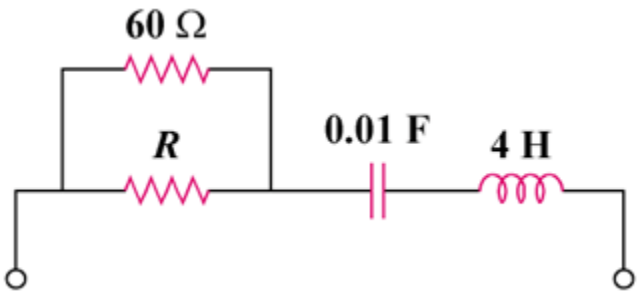

Figure 16.38
For Prob. 16.15.

8.13

Solution

Step 1. Let R||60 = R_o. Next, convert the circuit into the s-domain and solve for T(s) = R_o + [1/(0.01s)] + 4s = R_o + (100/s) + 4s = [($4s^2$+R_os+100)/s]. Now to solve for the roots that represent a critically damped system.

$s_{1,2}$ = {-R_o±[$(R_o)^2$-4(400)]$^{0.5}$}/2.

The system is critically damped when [$(R_o)^2$-4(400)] = 0.

Step 2. $(R_o)^2$ = 1600 or R_o = 40. Since R_o = [Rx60/(R+60)] = 40 or 60R = 40R+2400 or 20R = 2400 or R = **120 Ω**.

www.konkur.in

Chapter 16, Solution 16.

The circuit in the s-domain is shown below.

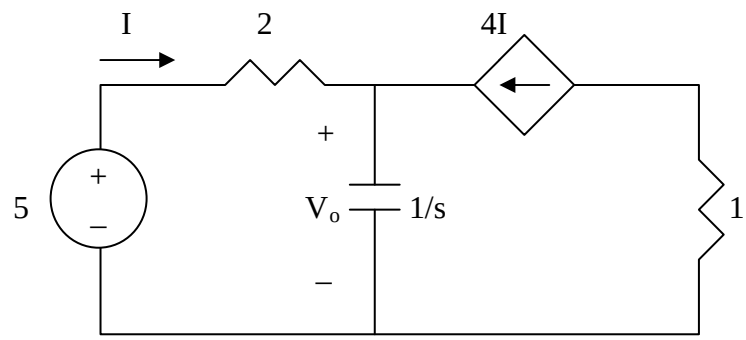

$$I + 4I = \frac{V_o}{1/s} \quad \longrightarrow \quad 5I = sV_o$$

But $I = \dfrac{5 - V_o}{2}$

$$5\left(\frac{5 - V_o}{2}\right) = sV_o \quad \longrightarrow \quad V_o = \frac{12.5}{s + 5/2}$$

$$v_o(t) = \mathbf{12.5e^{-2.5t}u(t)\ V}$$

www.konkur.in

Chapter 16, Solution 17.

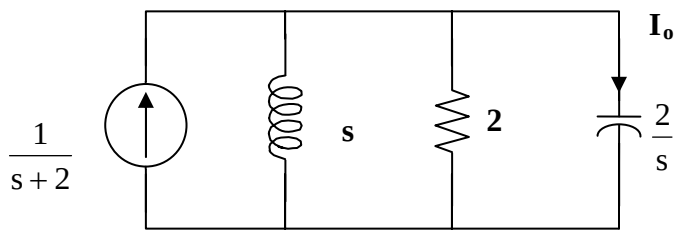

(-1+-sqrt(1-8))/2 = (-1+-(j2.646))/2 = -0.5+-j(1.3229)

$$V = \frac{1}{s+2}\left(\frac{1}{\frac{1}{s}+\frac{1}{2}+\frac{s}{2}}\right) = \frac{1}{s+2}\left(\frac{2s}{s^2+s+2}\right) = \frac{2s}{(s+2)(s+0.5+j1.3229)(s+0.5-j1.3229)}$$

$$I_o = \frac{Vs}{2} = \frac{s^2}{(s+2)(s+0.5+j1.3229)(s+0.5-j1.3229)}$$

$$= \frac{1}{s+2} + \frac{\frac{(-0.5-j1.3229)^2}{(1.5-j1.3229)(-j2.646)}}{s+0.5+j1.3229} + \frac{\frac{(-0.5+j1.3229)^2}{(1.5+j1.3229)(+j2.646)}}{s+0.5-j1.3229}$$

$$i_o(t) = \underline{\left(e^{-2t} + 0.3779e^{-90°}e^{-t/2}e^{-j1.3229t} + 0.3779e^{90°}e^{-t/2}e^{j1.3229t}\right)u(t)\,A}$$

or

$$\underline{= \left(e^{-2t} - 0.7559e^{-0.5t}\sin 1.3229t\right)u(t)\,A}$$

$$\text{or } i_o(t) = \left(\mathbf{e^{-2t} - \frac{2}{\sqrt{7}}e^{-0.5t}\sin\left(\frac{\sqrt{7}}{2}t\right)}\right)\mathbf{u(t)A}$$

www.konkur.in

Chapter 16, Solution 18.

For t<0, $v(0) = v_s = 20$ V
For t>0, the circuit in the s-domain is as shown below.

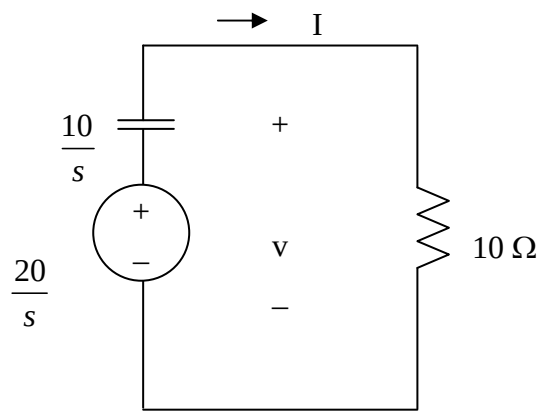

$$100mF = 0.1F \longrightarrow \frac{1}{sC} = \frac{10}{s}$$

$$I = \frac{20/s}{10 + 10/s} = \frac{2}{s+1}$$

$$V = 10I = \frac{20}{s+1}$$

$$v(t) = \underline{20e^{-t}u(t)}$$

www.konkur.in

Chapter 16, Solution 19.

The switch in Fig. 16.42 moves from position A to position B at t=0 (please note that the switch must connect to point B before it breaks the connection at A, a make before break switch). Find v(t) for t >0.

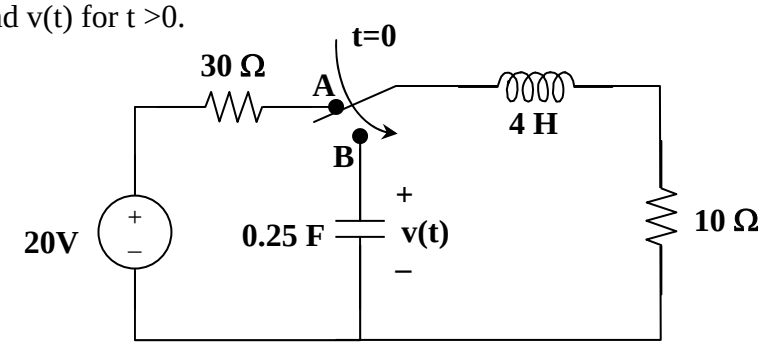

Figure 16.42
For Prob. 16.19.

Solution

Step 1. First find all the initial conditions and then transform into the s-domain. Since the capacitor is not connected to a circuit, we do not know its initial condition so we can assume it is zero (v(0) = 0). We can find $i_L(0)$ by letting the inductor be a short and $i_L(0)$ = 20/40 = 0.5 amp.

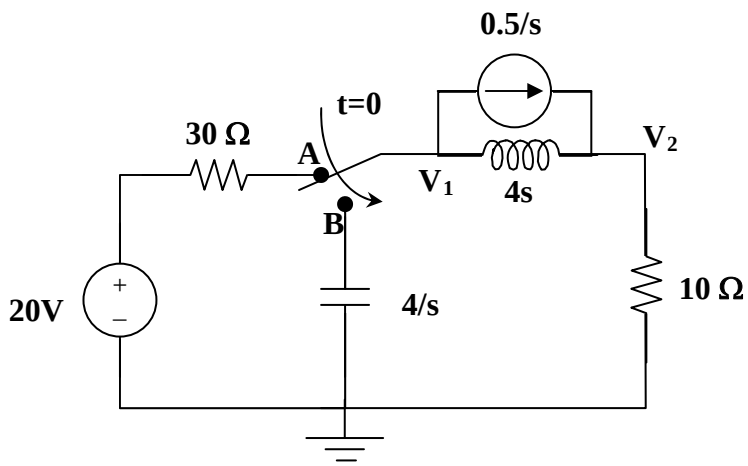

$[(V_1–0)/(4/s)] + [(V_1–V_2)/(4s)] + (0.5/s) = 0$ and
$[(V_2–V_1)/(4s)] + (–0.5/s) + [(V_2–0)/10] = 0$ where $V = V_1$. Next, add these together, $[sV_1/4] + [V_2/10] = 0$ or $V_2 = –2.5sV_1$. Now we can solve for V_1 and V.

Step 2. $[(s/4)+(1/(4s))+(2.5s/(4s))]V_1 = –0.5/s$
$= [(s^2+2.5s+1)/(4s)]V_1$ or $V_1 = –0.5(4)/(s^2+2.5s+1) = –2/[(s+0.5)(s+2)]$
$= [–1.3333/(s+0.5)]+[1.3333/(s+2)]$ or

$$v(t) = \mathbf{[–1.3333e^{–t/2}+1.3333e^{–2t}]u(t)\ volts}.$$

www.konkur.in

Chapter 16, Solution 20.

Find $i(t)$ for $t > 0$ in the circuit of Fig. 8.43.

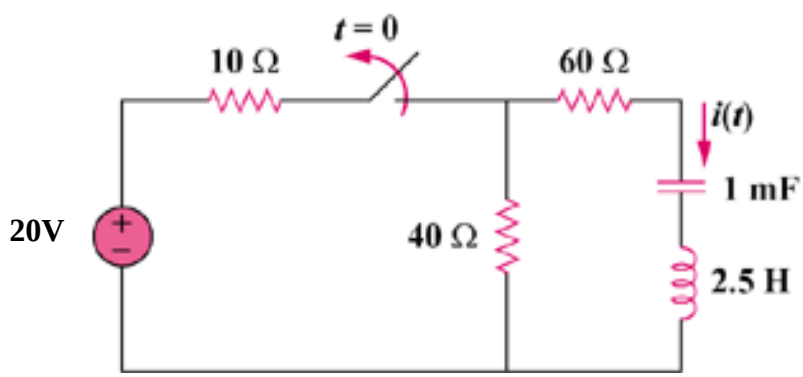

Figure 16.43
For Prob. 16.20.

8.16

Step 1. Convert the circuit into the s-domain and write one loop equation noting that i(0) = 0 and $v_c(0) = 16$ volts.

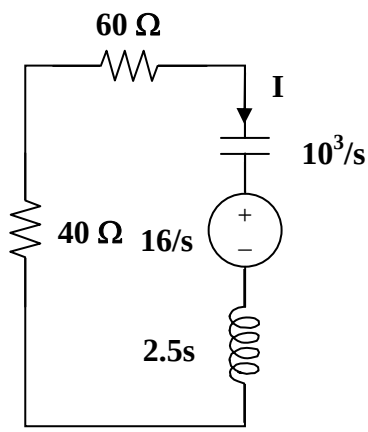

$[(1000/s)]I + [16/s] + [2.5s]I + [40+60]I = 0$ or
$[(2.5s^2+100s+1000)/s]I = -16/s$ or $I = -16/[2.5(s^2+40s+400)] = -.64/(s+20)^2$

Step 2. $I = [A/(s+20)] + [B/(s+20)^2]$ where $B = -64$ so $A = 0$. Thus,

$$i(t) = \mathbf{6.4te^{-20t}u(t)\ A}.$$

www.konkur.in

Chapter 16, Solution 21.

In the circuit of Fig. 16.44, the switch moves (make before break switch) from position *A* to *B* at $t = 0$. Find $v(t)$ for all $t \geq 0$.

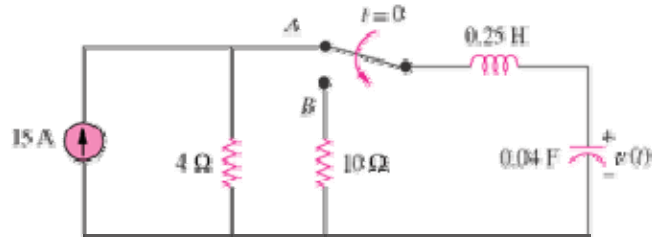

Figure 16.44
For Prob. 16.21.

Solution

Step 1. First we need to find our initial conditions, clearly i(0) = 0 and v(0) = 4x15 = 60 volts. Next we convert the circuit into the s-domain. We can then write a mesh equation and solve for v(t).

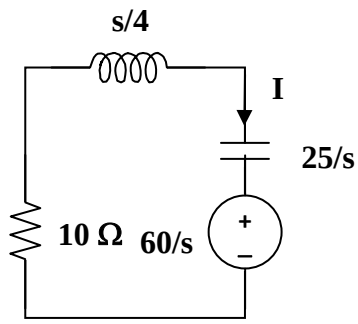

[10+(s/4)+(25/s)]I + 60/s = 0 and V = (25/s)I + 60/s

Step 2. I = –(60/s)/[10+(s/4)+(25/s)] = –(60/s){4s/[s^2+40s+100]
= –240/[(s+2.679)(s+37.32)] = [A/(s+2.679)]+[B/(s+37.32)] where
A = –240/(–2.679+37.32) = –6.928 and B = –240/(–37.32+2.679) = 6.928.

This now leads to V = (25/s)I+60/s
= {(25)(–6.928)/[s(s+2.679)]}+{(25)(6.928)/[s(s+37.32)]}+60/s
= {–173.2/[s(s+2.679)]}+{173.2/[s(s+37.32)]}+60/s
= [a/s]+[b/(s+2.679)]+[c/(s+37.32)] where
a = [–173.2/2.679]+[173.2/37.32]+60 = –64.65+4.641+60 = –0.009 (In practice and theoretically, this term must be equal to be zero since there will be no energy in the circuit at t = ∞!);
b = [–173.2/(–2.679)] = 64.65; and c = 173.2/(–37.32) = –4.641 or –4.65 if we correct the rounding errors. Thus,

$$v(t) = \mathbf{[64.65e^{-2.679t} – 4.65e^{-37.32t}]u(t)\ volts}.$$

www.konkur.in

Chapter 16, Solution 22.

Find the voltage across the capacitor as a function of time for $t > 0$ for the circuit in Fig. 16.45. Assume steady-state conditions exist at $t = 0^-$.

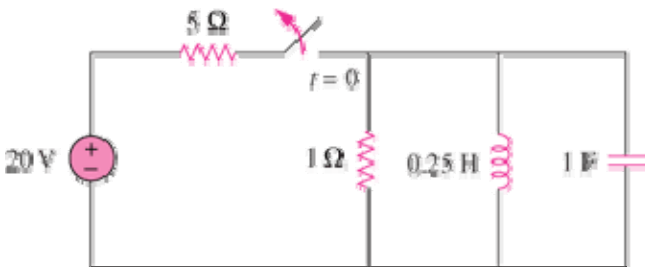

Figure 16.45
For Prob. 16.22.

Solution

Step 1. First we need to calculate the initial conditions, $v_C(0) = 0$ and $i_L(0) = 20/5 = 4$ amps. Next we need to convert the circuit into the s-domain and solve for the node voltage $V = V_C$. Convert this back into the time domain and obtain $v_C(t)$.

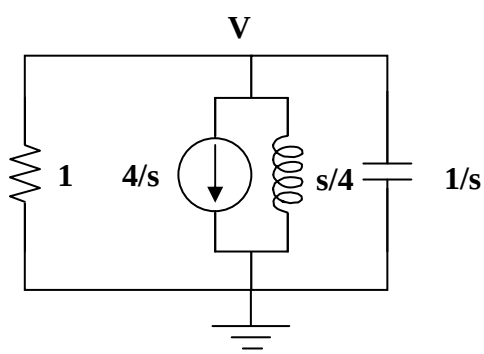

$[(V–0)/1]+[4/s]+[(V–0)/(s/4)]+[(V–0)/(1/s)] = 0$ then solve for V, next complete a partial fraction expansion, and then convert back into the time domain.

Step 2. $[1+(4/s)+s]V = [(s^2+s+4)/s]V = –4/s$ or
$V = –4/[(s+0.5+j1.9365)(s+0.5–j1.9365)]$
$= [A/(s+0.5+j1.9365)] + [B/(s+0.5–j1.9365)]$ where $A = –4/(–j3.873)$
$= 1.0328\angle–90^\circ$ and $B = –4/(j3.873) = 1.0328\angle90^\circ$. Thus,

$$v_C(t) = 1.0328e^{-t/2}[e^{-(j1.9365t+90^\circ)}+e^{(j1.9365t+90^\circ)}]u(t)$$

$$= \mathbf{2.066e^{-t/2}\cos(1.9365t+90^\circ)u(t)\ volts}.$$

www.konkur.in

Chapter 16, Solution 23.

Obtain $v(t)$ for $t > 0$ in the circuit of Fig. 16.46.

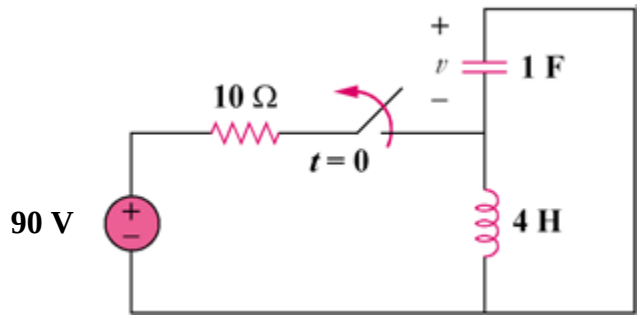

Figure 16.46
For Prob. 16.23.

Solution

Step 1. First we need to calculate the initial conditions. Clearly since the inductor looks like a short, v(0) = 0 and $i_L(0)$ = 90/10 = 9 amps. Next we convert the circuit into the s-domain and solve for V and then obtain the partial fraction expansion and convert back into the time domain.

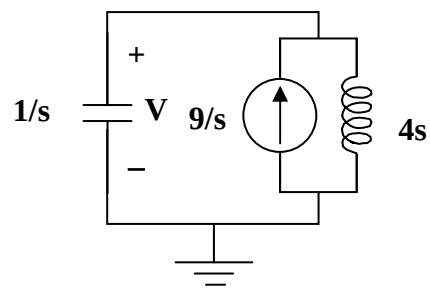

[(V–0)/(1/s)]+(–9/s)+[(V–0)/4s] = 0

Step 2.
[s+(1/(4s))]V = 9/s = [(s^2+0.25)/(4s)]V or V = 36/[(s+j0.5)(s–j0.5)]
= [A/(s+j0.5)] + [B/(s–j0.5)] where A = 36/(–j) = 36∠90˚ and
B = 36/(j) = 36∠–90˚. Thus,
v(t) = 36[$e^{-(j0.5t-90^\circ)}$+$e^{(j0.5t-90^\circ)}$]u(t)

= **18cos(0.5t–90˚)u(t) volts**.

www.konkur.in

Chapter 8, Solution 24.

The switch in the circuit of Fig. 16.47 has been closed for a long time but is opened at $t = 0$. Determine $i(t)$ for $t > 0$.

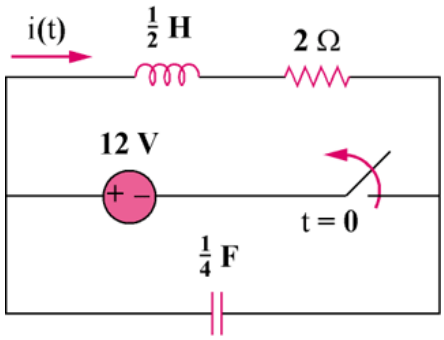

Figure 16.47
For Prob. 16.24.

8.20

Solution

Step 1. First we solve for the initial conditions and then convert the circuit into the s-domain and then solve for I, perform a partial fraction expansion, then convert back into the time domain. We recognize that the capacitor becomes an open circuit and the inductor becomes a short circuit at $t = 0^-$. Therefore, v(0) = 12 volts and i(0) = 12/2 = 6 amps.

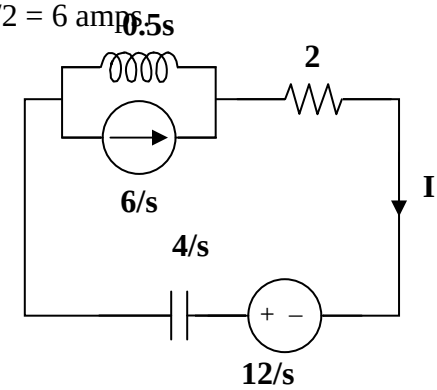

We can use mesh analysis, –(12/s) + (4/s)I + (0.5s)(I–6/s) + 2I = 0.

Step 2. $[(4/s)+0.5s+2]I = (12/s)+(3) = (3s+12)/s = [(s^2+4s+8)/(2s)]I$ or
$I = (6s+24)/[(s+2+j2)(s+2–j2)] = [A/(s+2+j2)] + [B/(s+2–j2)]$ where
$A = (–12–j12+24)/(–j4) = 16.97\angle–45^\circ/4\angle–90^\circ = 4.243\angle45^\circ$ and
$B = (–12+j12+24)/(j4) = 4.243\angle–45^\circ$. Thus,
$i(t) = 4.243e^{-2t}[e^{-(j2t-45^\circ)}+e^{(j2t-45^\circ)}]u(t)$

$$= \mathbf{8.486e^{-2t}\cos(2t–45^\circ)\ amps}.$$

www.konkur.in

Chapter 16, Problem 25.

Calculate $v(t)$ for $t > 0$ in the circuit of Fig. 16.48.

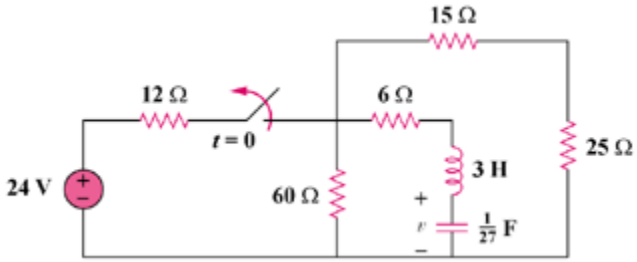

Figure 16.48
For Prob. 16.25.

Step 1. First solve for the initial conditions. Then simplify the circuit and then convert it into the s-domain and then solve for v(t). Since the capacitor becomes an open circuit, $i_L(0) = 0$ and $v(0) = (24)24/36 = 16$ volts.

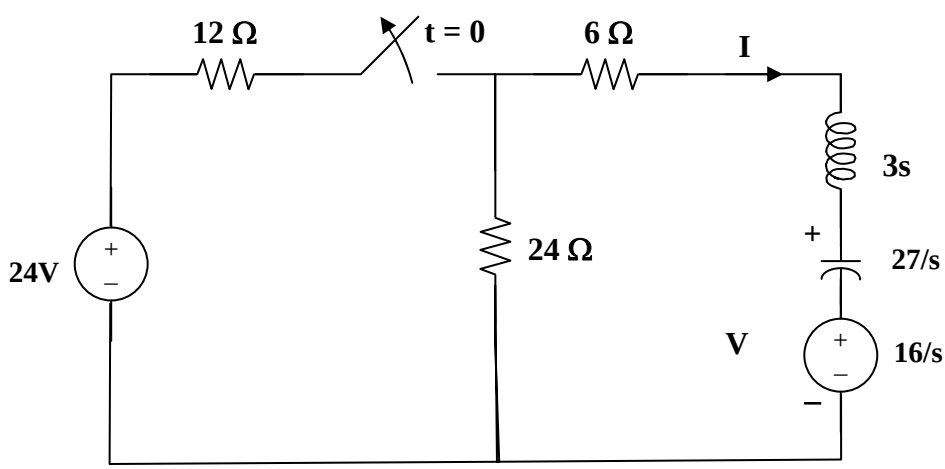

We can now use mesh analysis to solve for V(s). $(30+3s+27/s)I + 16/s = 0$ or $[3(s^2+10s+9)/s]I = -16/s$ or $I = -(16/3)/[(s+1)(s+9)]$ and $v = (27/s)I + 16/s$.

Step 2. $V = -(16/3)(27)/[s(s+1)(s+9)] + 16/s = -144/[s(s+1)(s+9)] + 16/s$. Thus,

$V = [A/s]+[B/(s+1)]+[C/(s+9)]$ where $A = -(144/9)+16 = 0$ (as expected) and $B = -144/[(-1)(-1+9)] = 144/8 = 18$ and $C = -144/[(-9)(-9+1)] = -144/72 = -2$.

$$v(t) = \mathbf{[18e^{-t}-2e^{-9t}]u(t)\ volts}.$$

www.konkur.in

Chapter 16, Problem 26.

The switch in Fig. 16.49 moves from position A to position B at t=0 (please note that the switch must connect to point B before it breaks the connection at A, a make before break switch). Determine i(t) for t >0. Also assume that the initial voltage on the capacitor is zero.

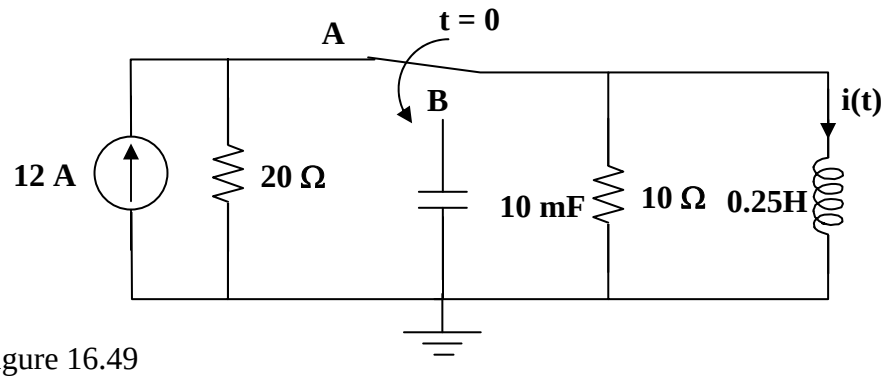

Figure 16.49
For Prob. 16.26.

Solution

Step 1. Determine the initial conditions and then convert the circuit into the s-domain. Then solve for V and then find I. Convert it into the time domain. It is clear from the circuit that $i_L(0) = 12$ A.

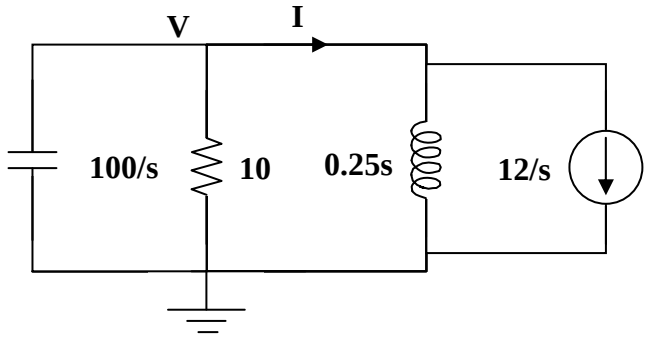

Applying nodal analysis we get,
[(V–0)/(100/s)]+[(V–0)/10]+[(V–0)/(0.25s)]+12/s = 0 where
I = [(V–0)/(0.25s)]+12/s.

Step 2. $[(s^2+10s+400)/(100s)]V = -12/s$ or
V = –1200/[(s+5+j19.365)(s+5–j19.365)] or
I = –{4800/[s(s+5+j19.365)(s+5–j19.365)]}+12/s
= [A/s]+[B/(s+5+j19.365)]+[C/(s+5–j19.365)] where A = –12+12 = 0, as to be expected; B = –4800/[(–5–j19.365)(–j38.73)]
= 4800∠180˚/[(20∠–104.48)(38.73∠–90˚)] = 6.197∠14.48˚; and
C = –4800/[(–5+j19.365)(j38.73)] = 4800∠180˚/[(20∠104.48)(38.73∠90˚)]
= 6.197∠–14.48˚.

$$i(t) = \mathbf{[12.394e^{-5t}\cos(19.365t+14.48^\circ)]u(t)\ amps}.$$

www.konkur.in

Chapter 16, Problem 27.

Find $v(t)$ for $t > 0$ in the circuit in Fig. 16.50.

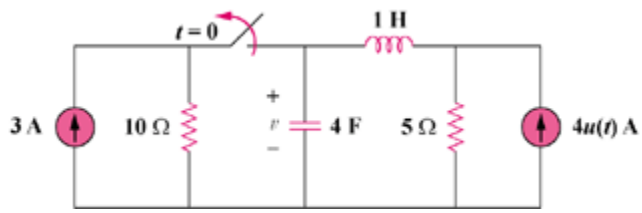

Figure 16.50
For Problem 16.27.

Solution

Step 1. First we need to determine the initial conditions. We note that the source on the right is equal to zero until the switch opens. So, all initial conditions come from the 3-amp source on the left. Since the capacitor looks like an open and the inductor looks like a short we get,

v(0) = 3[5x10/(5+10)] = 10 volts and $i_L(0)$ = 10/5 = 2 amps.

Next we convert the circuit (t > 0) into the s-domain with initial conditions. Then we can solve for V, perform a partial fraction expansion and solve for v(t).

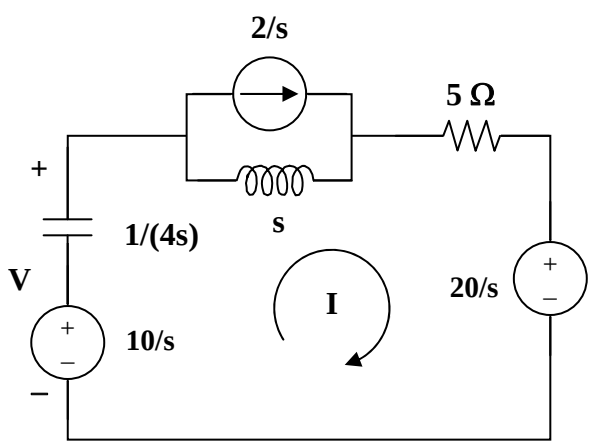

–[10/s]+[1/(4s)]I+[s(I–(2/s))]+5I+[20/s] = 0 and V = [1/(4s)](–I) + [10/s]

Step 2. {[1/(4s)]+s+5}I = {[s^2+5s+0.25]/(s)}I = 2–10/s = 2(s–5)/s or
I = 2(s–5)/[(s+0.05051)(s+4.949)] and
V = {–2(s–5)/[(4s)(s+0.05051)(s+4.949)]}+10/s
= {–0.5(s–5)/[s(s+0.05051)(s+4.949)]}+10/s

V = [A/s] + [B/(s+0.05051)] + [C/(s+4.949)] where

www.konkur.in

A = [2.5/[(0.05051)(4.949)]]+10 = 20;
B = –0.5(–0.05051–5)/[(–0.05051)(–0.05051+4.949)]
= 2.52525/(–0.24742) = –10.206; and
C = –0.5(–4.949–5)/[(–4.949)(–4.949+0.05051)] = 4.9745/24.243 = 0.2052.

$$v(t) = \mathbf{[20–10.206e^{–0.05051t}+0.2052e^{–4.949t}]u(t)\ volts}.$$

dv/dt = –10.206(–0.05051)+0.2052(–4.949) = 0.5155–1.0155 = –0.5 or
Cdv/dt = –4x0.5 = –2 amps, the answer checks!

www.konkur.in

Chapter 16, Problem 28.

For the circuit in Fig. 16.51, find $v(t)$ for $t > 0$.

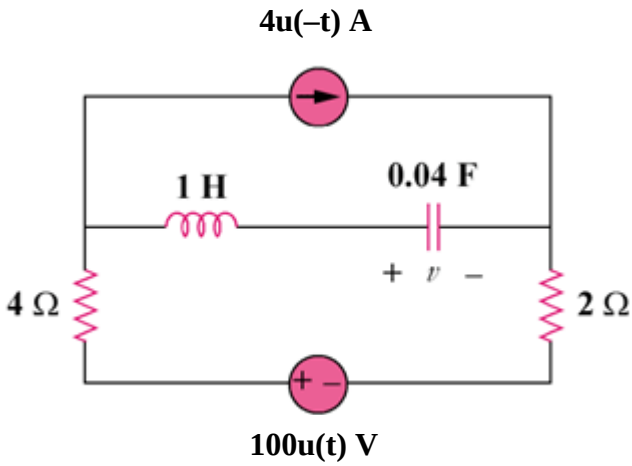

Figure 16.51
For Prob. 16.28.

Solution

Step 1. Determine the initial conditions (at t = 0, the 4 amp current source turns off and the 100 volt voltage source becomes active). Since the capacitor becomes an open circuit, $i_L(0) = 0$ and $v(0) = -4x6 = -24$ volts. Now convert the circuit into the s-domain and solve for V and then convert it into the time domain to obtain v(t),

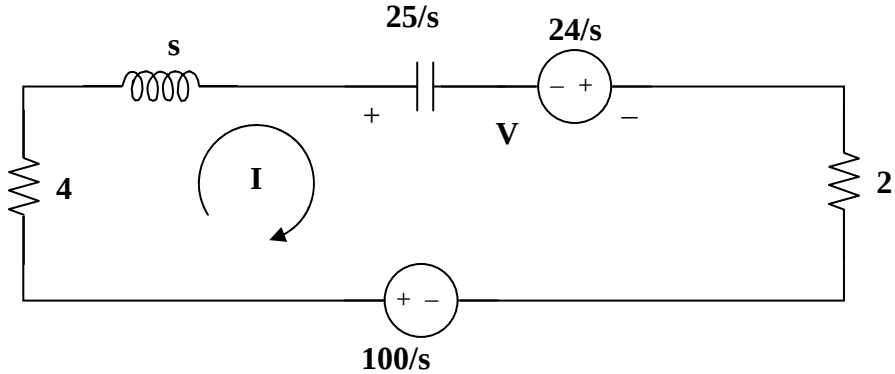

Now for the mesh equation, $[4+s+(25/s)+2]I-(24/s)-(100/s) = 0$. $V = (25/s)I-24/s$.

Step 2. $[(s^2+6s+25)/s]I = 124/s$ or $I = 124/(s^2+6s+25) = 124/[(s+3+j4)(s+3-j4)]$ thus,

$V = \{3100/[s(s+3+j4)(s+3-j4)]\}-24/s = [A/s]+[B/(s+3+j4)]+[C/(s+3-j4)]$ where
$A = (3100/25)-24 = 124-24 = 100$; $B = 3100/[(-3-j4)(-j8)]$
$= 3100/[(5\angle-126.87^\circ)(8\angle-90^\circ)] = 77.5\angle-143.13^\circ$; and
$C = 3100/[(j8)(-3+j4)] = 3100/[(5\angle126.87^\circ)(8\angle90^\circ)] = 77.5\angle143.13^\circ$.

$$v(t) = \mathbf{[100+155e^{-3t}\cos(4t+143.13^\circ)]u(t)\ volts}.$$

www.konkur.in

Chapter 16, Problem 29.

Calculate $i(t)$ for $t > 0$ in the circuit in Fig. 16.52.

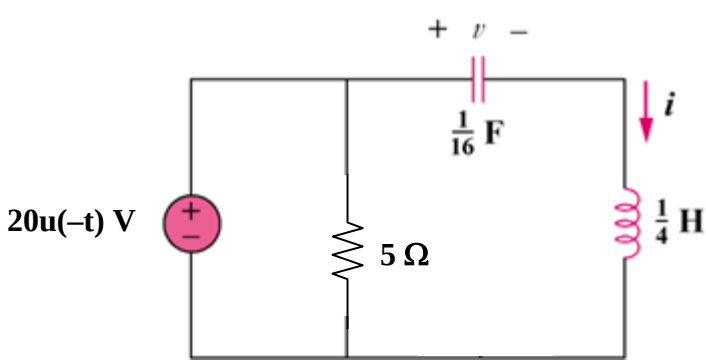

Figure 16.52
For Prob. 16.29.

Solution

Step 1. Calculate the initial conditions and then convert the above circuit into the s-domain. Then solve for I, perform a partial fraction expansion, and convert into the time domain. v(0) = 20 volts and i(0) = 0.

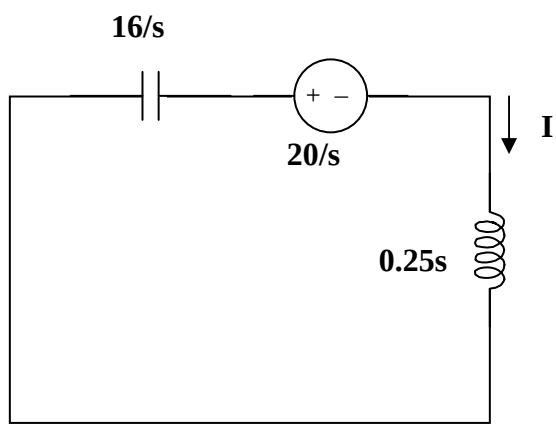

[16/s]I + [20/s] + 0.25sI = 0.

Step 2. {[16/s]+0.25s}I = –20/s = {[s^2+64]/(4s)}I or I = –80/[(s+j8)(s–j8)] or

I = [A/(s+j8)] + [B/(s–j8)] where A = –80/(–j16) = 5∠–90˚ and
B = –80/(j16) = 5∠90˚ thus,

$$i(t) = [5e^{-j8t-90^\circ}+5e^{j8t+90^\circ}]u(t) = \mathbf{10\cos(8t+90^\circ)u(t)\ amps}.$$

Chapter 16, Solution 30.

The circuit in the s-domain is shown below. Please note, $i_L(0) = 0$ and $v_o(0) = o$ because both sources were equal to zero for all t<0.

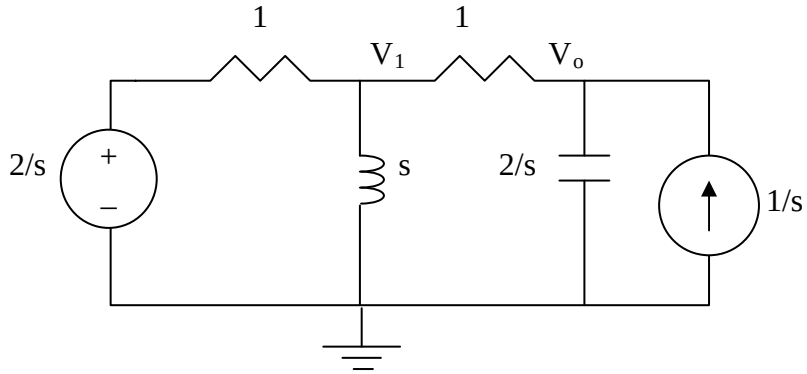

At node 1

$[(V_1–2/s)/1] + [(V_1–0)/s] + [(V_1–V_2)/1] = 0$ or $[1+(1/s)+1]V_1–V_2 = 2/s$ or
$[(2s+1)/s]V_1–V_2 = 2/s$

At node o

$[(V_o–V_1)/1] + [(V_o–0)/(2/s)] – (1/s) = 0$ or
$–V_1+[(s+2)/2]V_o = 1/s$

In matrix form we get,

$$\begin{bmatrix} \frac{2s+1}{s} & -1 \\ -1 & \frac{s+2}{2} \end{bmatrix} \begin{bmatrix} V_1 \\ V_1 \end{bmatrix} = \begin{bmatrix} \frac{2}{s} \\ \frac{1}{s} \end{bmatrix}$$ or

$$\begin{bmatrix} V_1 \\ V_o \end{bmatrix} = \frac{\begin{bmatrix} \frac{s+2}{2} & 1 \\ 1 & \frac{2s+1}{s} \end{bmatrix}}{\frac{(2s+1)(s+2)}{2s} - (-1)(-1)} \begin{bmatrix} \frac{2}{s} \\ \frac{1}{s} \end{bmatrix} = \frac{\begin{bmatrix} \frac{s+2}{2} & 1 \\ 1 & \frac{2s+1}{s} \end{bmatrix}}{\frac{s^2+1.5s+1}{s}} \begin{bmatrix} \frac{2}{s} \\ \frac{1}{s} \end{bmatrix}$$

$s^2+1.5s+1 = (s+0.75+j0.6614)(s+0.75–j0.6614)$

$V_o = s[(2/s)+(2s+1)/s^2]/[(s+0.75+j0.6614)(s+0.75–j0.6614)]$
$= (4s+1)/[s(s+0.75+j0.6614)(s+0.75–j0.6614)]$
$= [A/s] + [B/(s+0.75+j0.6614)] + [C/(s+0.75–j0.6614]$ where A = 1;
$B = [4(–0.75–j0.6614)+1]/[(–0.75–j0.6614)(–j1.3228)]$
$= [–3–j2.6456+1]/[(1\angle–138.59^\circ)(1.3228\angle–90^\circ)]$
$= (3.3165\angle–127.09^\circ)/[(1\angle–138.59^\circ)(1.3228\angle–90^\circ)] = 2.507\angle101.5^\circ$
$C = [4(–0.75+j0.6614)+1]/[(–0.75+j0.6614)(j1.3228)]$
$= [–3+j2.6456+1]/[(1\angle138.59^\circ)(1.3228\angle90^\circ)]$
$= (3.3165\angle127.09^\circ)/[(1\angle138.59^\circ)(1.3228\angle90^\circ)] = 2.507\angle–101.5^\circ$

www.konkur.in

Therefore,

$$v_o(t) = [1+2.507e^{-0.75t}e^{-(j0.6614t-101.5^\circ)}+2.507e^{-0.75t}e^{(j0.6614t-101.5^\circ)}]u(t) \text{ volts or}$$

$$= \mathbf{[1+5.014e^{-0.75t}cos(0.6614t-101.5^\circ)]u(t)\ volts}.$$

An alternate solution is,

$$V_o = \frac{(4s+1)}{s(s^2+1.5s+1)} = \frac{A}{s} + \frac{Bs+C}{s^2+1.5s+1}$$

$$4s+1 = A(s^2+1.5s+1) + Bs^2 + Cs$$

We equate coefficients.

s^2 :	0 = A+ B or B = –A
s:	4=1.5A + C
constant:	1 = A, B=–1, C = 4–1.5A = 2.5

$$V_o = \frac{1}{s} + \frac{-s+2.5}{s^2+1.5s+1} = \frac{1}{s} - \frac{s+3/4}{(s+3/4)^2+\left(\frac{\sqrt{7}}{4}\right)^2} + \frac{\frac{3.25}{\frac{\sqrt{7}}{4}} x \frac{\sqrt{7}}{4}}{(s+3/4)^2+\left(\frac{\sqrt{7}}{4}\right)^2} \text{ where } \frac{\sqrt{7}}{4} = 0.6614.$$

This now leads to,

$$v_o(t) = \mathbf{[1-e^{-3t/4}cos(0.6614t)+4.914e^{-3t/4}sin(0.6614t)]u(t)\ volts}.$$

www.konkur.in

Chapter 16, Solution 31.

Obtain $v(t)$ and $i(t)$ for $t > 0$ in the circuit in Fig. 16.54.

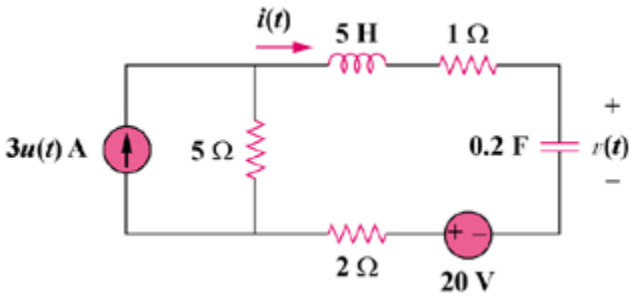

Figure 16.54
For Prob. 16.31.

Solution

Step 1. First, find the initial conditions and then transform the above circuit into the s-domain after converting the current source in parallel with the 5-ohm resistor into a 15 volts voltage source in series with a 5-ohm resistor. Then solve for V and I, perform a partial fraction expansion on each and then convert back into the time domain. The steady state the values are i(0) = 0 and v(0) = 20 volts.

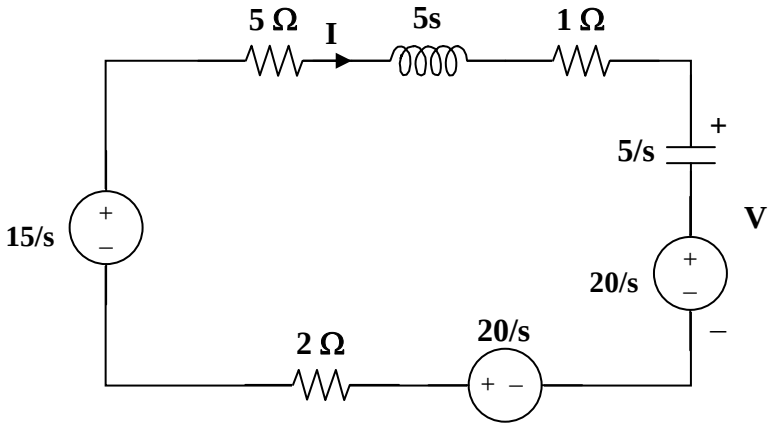

–[15/s]+5I+(5s)I+1I+[5/s]I+[20/s]–[20/s]+2I = 0 and V = {[5/s]I+[20/s].

Step 2. {5+[5s]+1+[5/s]+2}I = [15/s]–[20/s]+[20/s] = 15/s or

{5[s^2+1.6s+1]/s}I = 15/s or I = 3/[(s+0.8+j0.6)(s+0.8–j0.6)] and
V = {[5/s]I+[20/s] = 15/[s(s+0.8+j0.6)(s+0.8–j0.6)] + 20/s
= [A/s] + [B/(s+0.8+j0.6)] + [C/(s+0.8–j0.6)] where A = [15/(0.64+0.36)]+20 = 35; B = 15/[(–0.8–j0.6)(–j1.2)] = 12.5∠90˚/1∠–143.13˚ = 12.5∠–126.87˚; and
C = 15/[(–0.8+j0.6)(j1.2)] = 12.5∠–90˚/(1∠143.13˚ = 12.5∠126.87˚.

www.konkur.in

$v(t) = [35+12.5e^{-0.8t-j0.6t-126.87^\circ}+12.\ 5e^{-0.8t+j0.6t+126.87^\circ}]u(t)$ volts

$$= \mathbf{[35+25e^{-0.8t}\cos(0.6t+126.87^\circ)]u(t)\ volts}.$$

$I = 3/[(s+0.8+j0.6)(s+0.8-j0.6)] = [A/(s+0.8+j0.6)] + [B/(s+0.8-j0.6)]$ where $A = 3/(-j1.2) = 2.5\angle 90^\circ$ and $B = 3/(j1.2) = 2.5\angle -90^\circ$. Thus,

$i(t) = 2.5e^{-0.8t}[e^{-j0.6t+90^\circ}+e^{j0.6t-90^\circ}]u(t)$

$$= \mathbf{5e^{-0.8t}[\cos(0.6t-90^\circ)]u(t)\ amps}.$$

www.konkur.in

Chapter 16, Solution 32.

For the network in Fig. 16.55, solve for $i(t)$ for $t > 0$.

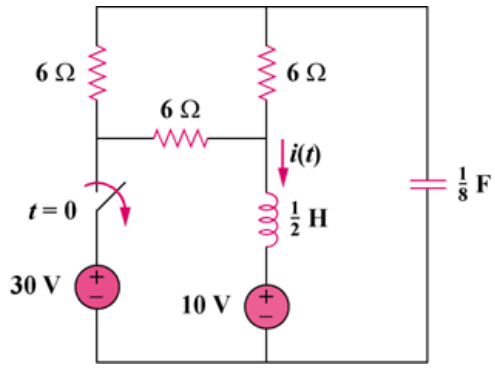

Figure 16.55
For Prob. 16.32.

Solution

Step 1. First we need to find all the initial conditions. Then we need to transform the circuit into the s-domain and solve for I. We then perform a partial fraction expansion and convert the results into the time domain. The inductor becomes a short and the capacitor becomes an open circuit. Thus, i(0) = [20/6] + [20/12] = 5 amps and $v_C(0)$ = 10 + 10 = 20 volts.

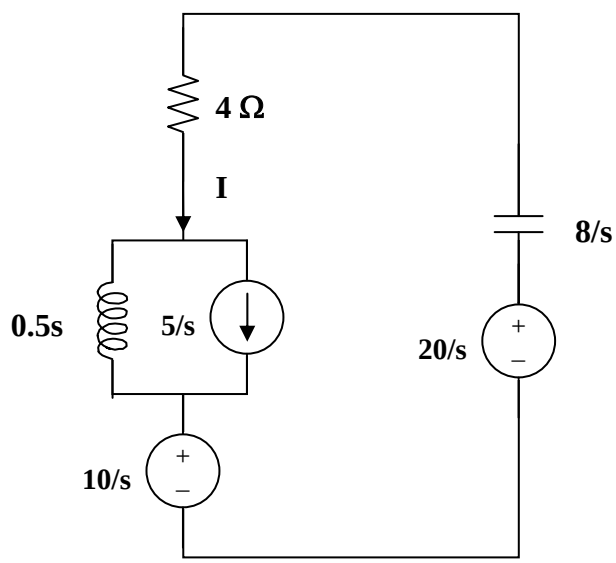

Loop equation, –[10/s]–0.5s(I–5/s)–4I–[8/s]I+[20/s] = 0.

Step 2. $[0.5s+4+8/s]I = [(s^2+8s+16)/(2s)]I = -[10/s]+2.5+20/s = (s+4)/(0.4s)$ or

$I = 5(s+4)/[(s+4)^2] = [A/(s+4)]+[B/(s+4)^2]$ where A(s+4)+B = 5(s+4) or A = 5 and B = 0. Therefore,

$$i(t) = \mathbf{[5e^{-4t}]u(t)\ amps}.$$

www.konkur.in

Chapter 16, Solution 33.

Using Fig. 16.56, design a problem to help other students to better understand how to use Thevenin's theorem (in the s-domain) to aid in circuit analysis.

Although there are many ways to solve this problem, this is an example based on the same kind of problem asked in the third edition.

Problem

Use Thevenin's theorem to determine $v_o(t)$, t>0 in the circuit of Fig. 16.56.

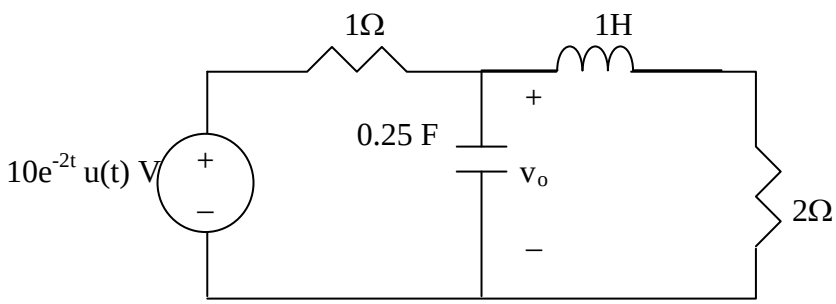

Figure 16.56 For Prob. 16.33.

Solution

$1H \longrightarrow 1s$ and $i_L(0) = 0$ (the sources is zero for all t<0).

$\frac{1}{4}F \longrightarrow \frac{1}{sC} = \frac{4}{s}$ and $v_C(0) = 0$ (again, there are no source contributions for all t<0).

To find Z_{Th}, consider the circuit below.

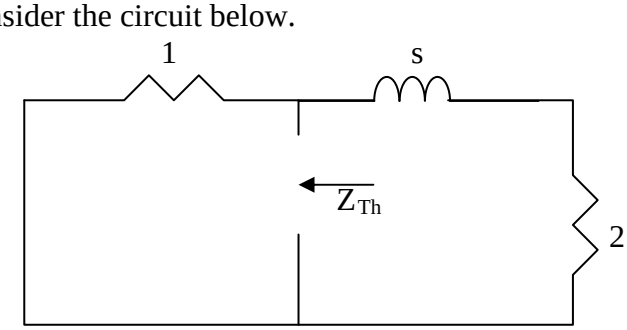

$$Z_{Th} = 1//(s+2) = \frac{s+2}{s+3}$$

To find V_{Th}, consider the circuit below.

1 s

www.konkur.in

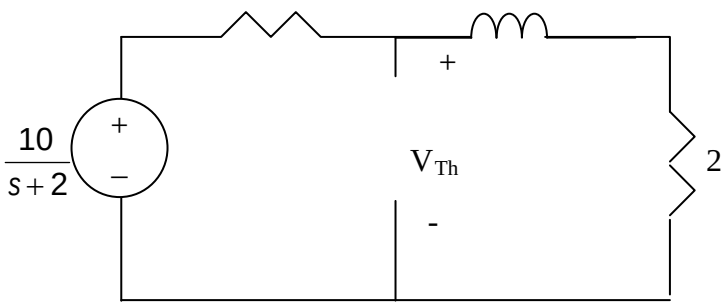

$$V_{Th} = \frac{s+2}{s+3} \bullet \frac{10}{s+2} = \frac{10}{s+3}$$

The Thevenin equivalent circuit is shown below

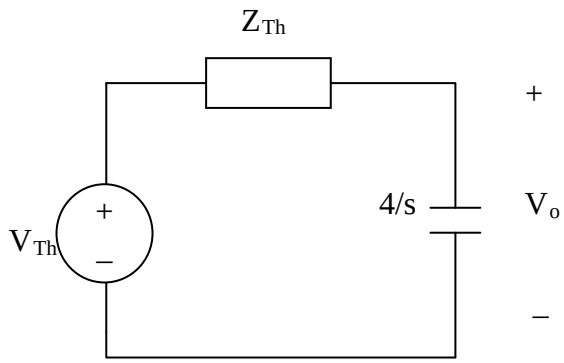

$$V_o = \frac{\frac{4}{s}}{\frac{4}{s} + Z_{Th}} V_{Th} = \frac{\frac{4}{s}}{\frac{4}{s} + \frac{s+2}{s+3}} \bullet \frac{10}{s+3} = \frac{40}{s^2 + 6s + 12} = \frac{\frac{40}{\sqrt{3}}\sqrt{3}}{(s+3)^3 + (\sqrt{3})^2}.$$

$$v_o(t) = \underline{23.094 e^{-3t} \sin \sqrt{3} t} \text{ V}$$

www.konkur.in

Chapter 16, Solution 34.

In the s-domain, the circuit is as shown below.

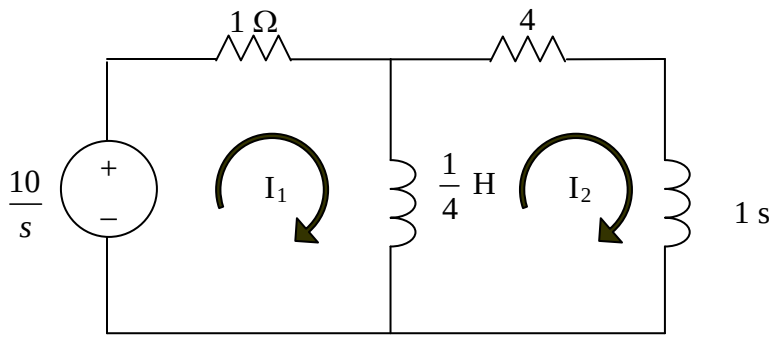

$$\frac{10}{s} = (1+\frac{s}{4})I_1 - \frac{1}{4}sI_2 \qquad (1)$$

$$-\frac{1}{4}sI_1 + I_2(4+\frac{5}{4}s) = 0 \qquad (2)$$

In matrix form,

$$\begin{bmatrix} \frac{10}{s} \\ 0 \end{bmatrix} = \begin{bmatrix} 1+\frac{s}{4} & -\frac{1}{4}s \\ -\frac{1}{4}s & 4+\frac{5}{4}s \end{bmatrix} \begin{bmatrix} I_1 \\ I_2 \end{bmatrix} \quad \Delta = \frac{1}{4}s^2 + \frac{9}{4}s + 4$$

$$\Delta_1 = \begin{vmatrix} \frac{10}{s} & -\frac{1}{4}s \\ 0 & 4+\frac{5}{4}s \end{vmatrix} = \frac{40}{s} + \frac{50}{4} \quad \Delta_2 = \begin{vmatrix} 1+\frac{s}{4} & \frac{10}{s} \\ -\frac{1}{4}s & 0 \end{vmatrix} = \frac{5}{2}$$

$$\mathbf{I_1 = \frac{\Delta_1}{\Delta} = \frac{\frac{40}{s} + \frac{25}{2}}{0.25s^2 + 2.25s + 4} = \underline{\frac{50s + 160}{s(s^2 + 9s + 16)}}}$$

$$\mathbf{I_2 = \frac{\Delta_2}{\Delta} = \frac{2.5}{0.25s^2 + 2.25s + 4} = \underline{\frac{10}{s^2 + 9s + 16}}}$$

Chapter 16, Solution 35.

Find $v_o(t)$ in the circuit in Fig. 16.58.

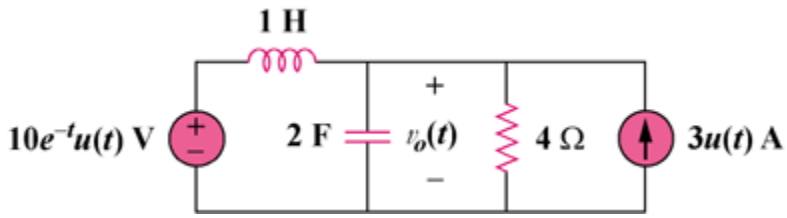

Figure 16.58
For Prob. 16.35.

<u>Solution</u>

Step 1. First we note that the initial condition on the capacitor and inductor must be equal to zero since the circuit is unexcited until t = 0. Next we transform the circuit into the s-domain.

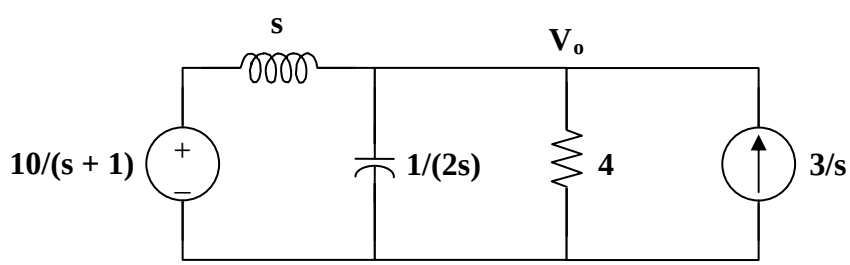

We then can solve for V_o using nodal analysis.

$$\frac{V_o - \frac{10}{s+1}}{s} + \frac{2s(V_o - 0)}{1} + \frac{V_o - 0}{4} - \frac{3}{s} = 0$$

$$\left(\frac{1}{s} + 2s + 0.25\right)V_o = \frac{10}{s(s+1)} + \frac{3}{s}$$

Finally we solve for V_o, perform a partial fraction expansion and then convert into the time-domain.

Step 2. $$2\left(\frac{s^2 + 0.125s + 0.5}{s}\right)V_o = \frac{3s + 13}{s(s+1)} \text{ or } V_o = \frac{1.5s + 6.5}{(s^2 + 0.125s + 0.5)(s+1)}$$

Next

$$s_{1,2} = \frac{-0.125 \pm \sqrt{0.015625 - 2}}{2} = -0.0625 \pm \frac{\sqrt{-1.984375}}{2} = -0.0625 \pm j0.70435$$

www.konkur.in

$$V_o = \frac{1.5s + 6.5}{(s+1)(s+0.0625+j0.70435)(s+0.0625-j0.70435)}$$

$$= \frac{A}{s+1} + \frac{B}{s+0.0625+j0.70435} + \frac{C}{s+0.0625-j0.70435}$$

where $A = \frac{-1.5+6.5}{1-0.125+0.5} = \frac{5}{1.375} = 3.636$

B =

$$\frac{1.5(-0.0625-j0.70435)+6.5}{(-0.0625-j0.70435+1)(-j1.4087)} = \frac{6.40625-j1.056525}{(0.9375-j0.70435)(-j1.4087)}$$

$$= (6.49279\angle -9.36497^\circ))/(1.17261\angle -36.9178^\circ)(1.4087\angle -90^\circ) = 3.9306\angle 117.553^\circ$$

C =

$$\frac{1.5(-0.0625+j0.70435)+6.5}{(-0.0625+j0.70435+1)(j1.4087)} = \frac{6.40625+j1.056525}{(0.9375+j0.70435)(j1.4087)}$$

$$= \frac{6.49279\angle 9.36497^\circ}{(1.17261\angle 36.9178^\circ)(1.4087\angle 90^\circ)} = 3.9306\angle -117.553^\circ$$

Thus,

$$v_o(t) =$$

$$[3.636e^{-t} + 3.931e^{-0.0625}(e^{117.55^\circ}e^{-j0.7044t} + e^{-117.55^\circ}e^{j0.7044t})]u(t)\text{volts}$$

or

$$[3.636e^{-t} + 7.862e^{-0.0625t}\cos(0.7044t - 117.55^\circ)]u(t)\text{volts}.$$

www.konkur.in

Chapter 16, Solution 36.

Refer to the circuit in Fig. 16.59. Calculate $i(t)$ for $t > 0$.

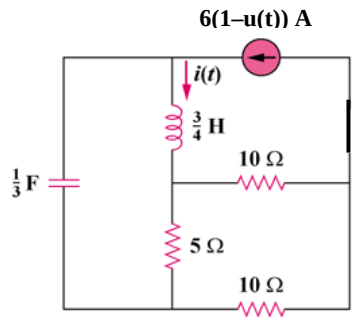

Figure 16.59
For Prob. 16.36.

Solution

Step 1. First we need to determine the initial conditions and then transform the circuit into the s-domain.

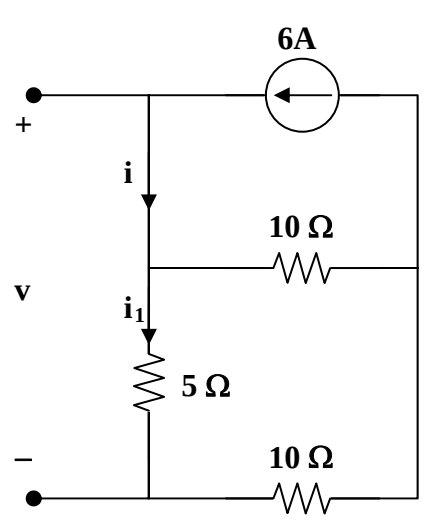

Clearly i = 6 A. The current then travels through the parallel combination of the 10 ohm resistor and the combined 15 ohm resistance. i_1 = 6[(15)(10)/(15+10)]/(15) = 2.4 A. Therefore, v(0) = 5x2.4 = 12 V and i(0) = 6 A. We also note that the two 10 ohm resistors are in series and the combination is in parallel with the 5 ohm resistor resulting in a 100/25 = 4 ohm resistor.

The circuit in the s-domain is shown below.

–[12/s] + [3/s]I + [0.75s](I–6/s) + 4I = 0.

www.konkur.in

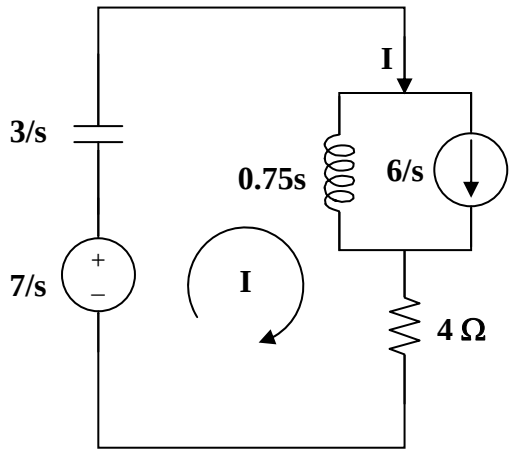

Step 2. $[(s^2+5.333s+4)/(4s/3)]I = 4.5+12/s = 4.5(s+2.667)/s$ or

$I = 6(s+2.667)/[(s+0.903)(s+4.43)] = [A/(s+0.903)]+[B/(s+4.43)]$ where

$A = 6(-0.903+2.667)/(-0.903+4.43) = 6x1.764/3.527 = 3.001$ and
$B = 6(-4.43+2.667)/(-4.43+0.903) = 6x(-1.763)/(-3.527) = 2.999$ or

$i(t) = \mathbf{[3.001e^{-0.903t}+2.999e^{-4.43t}]u(t)}$ **amps**.

www.konkur.in

Chapter 16, Solution 37.

Determine $v(t)$ for $t > 0$ in the circuit in Fig. 16.60.

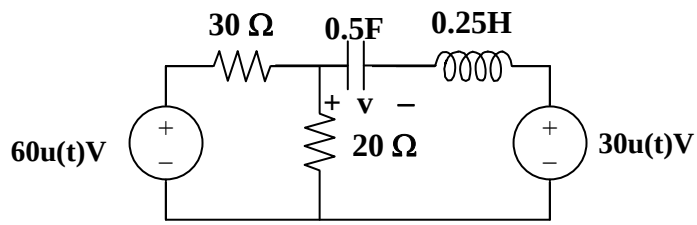

Figure 16.60
For Prob. 16.37.

Solution

Step 1. First we need to determine the initial conditions for this circuit. Since both sources were zero (shorts) until t = 0, the initial conditions for this circuit are equal to zero (v(0) = 0 and $i_L(0) = 0$). Next we transform the circuit into the s-domain. Then we can write node equations and then solve for V. Then perform a partial fraction expansion and convert back into the time domain.

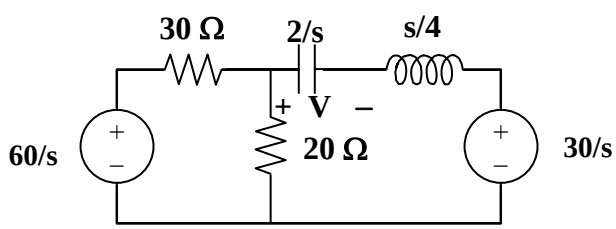

From this circuit there are different ways of solving for v(t). Perhaps the easiest is to replace the circuit seen by the capacitor and inductor with a Thevenin equivalent circuit. V_{Thev} = [(60/s)/(30+20)]20 – 30/s = (24/s)–(30/s) = –6/s and R_{eq} = 20x30/(20+30) = 12 Ω. Thus we now have the following circuit where we can now find I. Once we have I we can find V and then perform a partial fraction expansion and then convert into the time domain to solve for v(t).

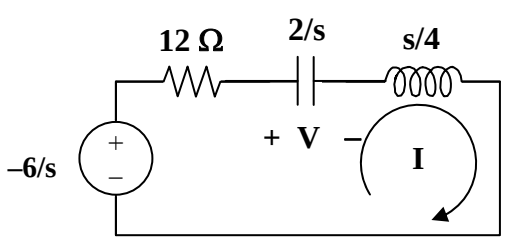

–[–6/s] + 12I + [2/s]I + [s/4]I = 0 and V = [2/s]I.

Step 2. [(s/4)+12+(2/s)]I = –6/s = [(s^2+48s+8)/(4s)]I or

www.konkur.in

$I = (-6/s)(4s)/ [(s^2+48s+8)] = -24/[(s+0.165)(s+47.84)]$ and
$V = -48/[s(s+0.1672)(s+47.84)] = [A/s]+[B/(s+0.1672)]+[C/(s+47.84)]$ where
$A = -48/[0.1672x47.84] = 6$; $B = -48/[-0.1672(-0.1672+47.84)] = 6.022$; and
$C = -48/[-47.84(-47.84+0.1672)] = -0.021$

Therefore,

$$v(t) = \mathbf{[-6+6.022e^{-0.1672t}-0.021e^{-47.84t}]u(t)\ volts}.$$

www.konkur.in

Chapter 16, Solution 38.

The switch in the circuit of Fig. 16.61 is moved from position *a* to *b* (a make before break switch) at $t = 0$. Determine $i(t)$ for $t > 0$.

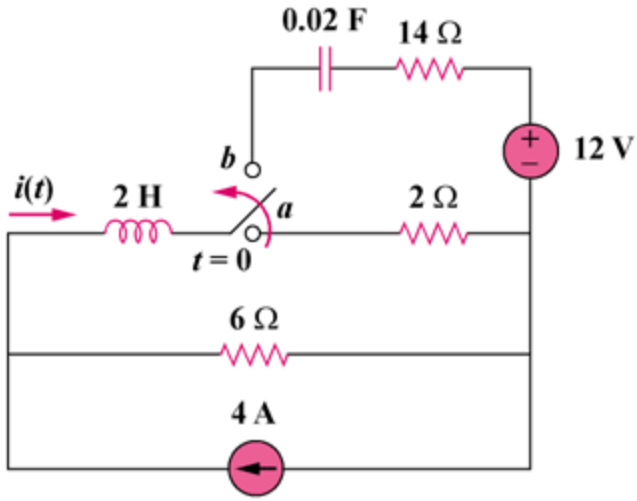

Figure 16.61
For Prob. 16.38.

Solution

Step 1. We first determine the initial conditions. We assume that $v_C(0) = 0$ since we are not given otherwise. i(0) = [4(2x6)/(2+6)]/2 = 3 amps. Next we need to convert the circuit for t > 0 into the s-domain converting the current source in parallel with the 6Ω into a voltage source in series with 6Ω.

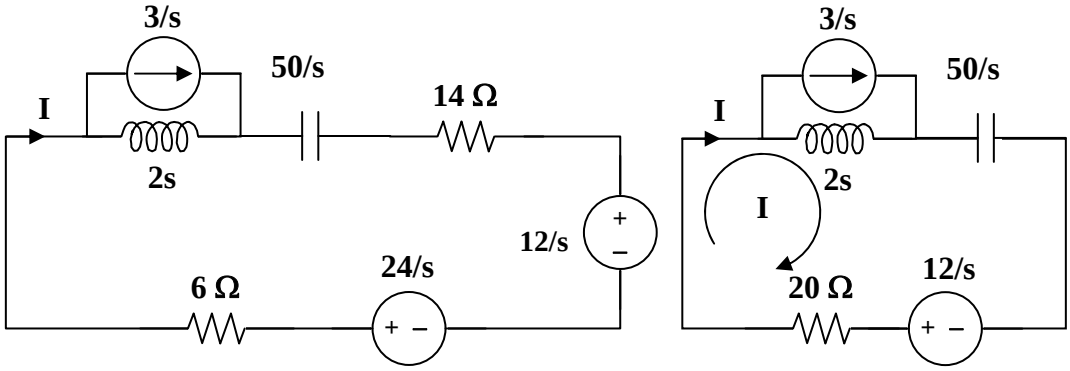

Using the simplified circuit on the right, 2s(I–3/s) + [50/s]I –(12/s) +20I = 0. Now we solve for I, perform a partial fraction expansion, and then convert into the time domain.

Step 2. [2s+(50/s)+20]I = 6+12/s = [(s^2+10s+25)/(0.5s)]I = 6(s+2)/s or I = [3(s+2)/$(s+5)^2$] = [A/(s+5)] + [B/$(s+5)^2$] where As+5A+B = 3s+6 or A = 3 and B = –5A+6 = –15+6 = –9. Thus,

$$i(t) = \mathbf{[(3-9t)e^{-5t}]u(t)\ amps}.$$

www.konkur.in

Chapter 16, Solution 39.

For the network in Fig. 16.62, find $i(t)$ for $t > 0$.

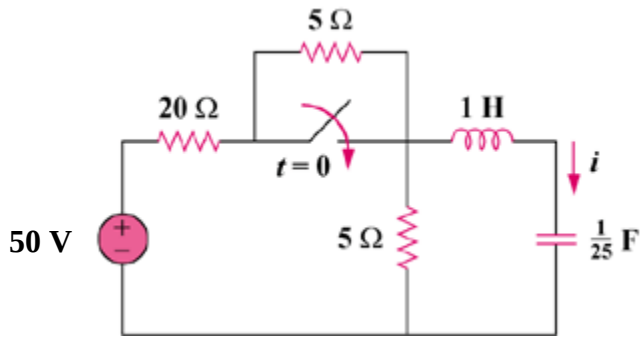

Figure 16.62
For Prob. 16.39.

Solution

Step 1. First determine the initial conditions at t = 0. Clearly i(0) = 0 and v(0) = [50/(20+5+5)]5 = 25/3 volts. Next simplify and convert the circuit for t > 0 into the s-domain.

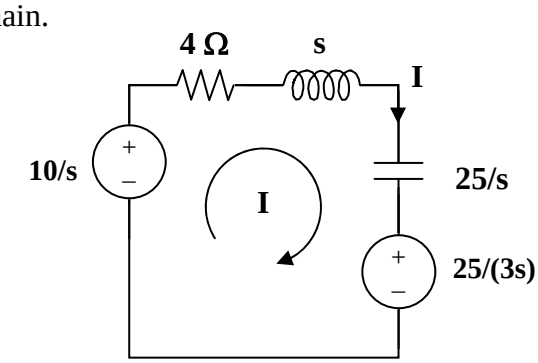

–[10/s] + [4+s+(25/s)]I + [25/(3s)] = 0 Now we need to solve for I, perform a partial fraction expansion, and then convert into the time domain.

Step 2. $[(s^2+4s+25)/s]I = [10/s] - 25/(3s) = [5/(3s)]$ or
$I = 1.6667/[(s+2+j4.583)(s+2-j4.583)] = [A/(s+2+j4.583)]+[B/(s+2-j4.583)]$
where $A = 1.6667/(-j9.166) = 0.18182\angle 90^\circ$ and $B = 0.18182\angle -90^\circ$. Therefore,

$i(t) = [0.18182e^{-2t}(e^{-j4.583t+90^\circ}+e^{j4.583t-90^\circ})]u(t)$ amps or

$$= \mathbf{[363.6e^{-2t}\cos(4.583t-90^\circ)]u(t)\ mA}.$$

www.konkur.in

Chapter 16, Solution 40.

Given the network in Fig. 16.63, find $v(t)$ for $t > 0$.

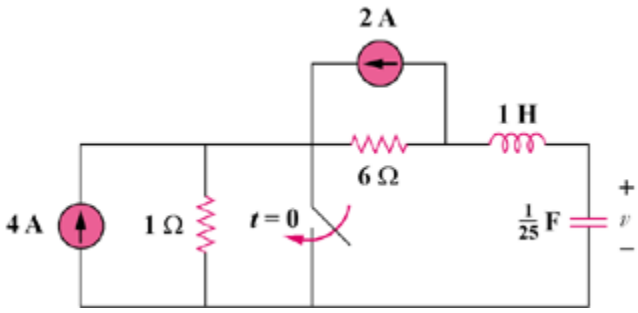

Figure 16.63
For Prob. 16.40.

Solution

Step 1. First we determine initial conditions and then simplify the circuit and then transform it into the s-domain. Just before the switch closes, the capacitor is an open circuit ($i_L(0) = 0$) with $v(0) = 4 - 12 = -8$ volts.

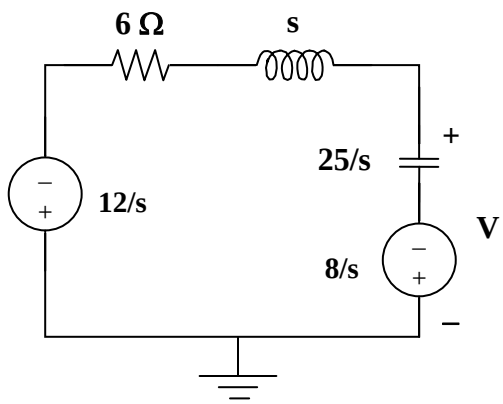

We can write a node equation at V and then solve for V. Then we perform a partial fraction expansion and then solve for v(t).

$[(V-(-12/s))/(s+6)]+[(V-(-8/s))/(25/s)] = 0.$

Step 2. $[(1/(s+6))+s/25]V = [(s^2+6s+25)/(25(s+6))]V$
$= -[12/(s(s+6))]-[8/25] = -[(12+0.32s^2+1.92s)/(s(s+6))]$
$= -0.32[(s^2+6s+37.5)/(s(s+6))]$ or
$V = -8[(s^2+6s+37.5)/(s(s+3+j4)(s+3-j4))]$
$= [A/s]+[B/(s+3+j4)]+[C/(s+3-j4)]$ where $A = -8[37.5/25] = -12$;
$B = -8[((-3-j4)^2+6(-3-j4)+37.5)/((-3-j4)(-j8)]$
$= -8[(-7+j24-18-j24+37.5)/(-32+j24)]$
$= -8[(12.5)/(40\angle 143.13^\circ)] = 2.5\angle 36.87^\circ$; and

www.konkur.in

$C = -8[((-3+j4)^2+6(-3+j4)+37.5)/((-3+j4)(j8)]$
$= -8[(-7-j24-18+j24+37.5)/(-32-j24)]$
$= -8[(12.5)/(40\angle -143.13^\circ)] = 2.5\angle -36.87^\circ$
$V = [-12/s] + [2.5\angle 36.87^\circ/(s+3+j4)] + [2.5\angle -36.87^\circ/(s+3-j4)]$ or

$v(t) = [-12+2.5e^{-3t}(e^{-j4t+36.87^\circ}+e^{j4-36.87^\circ})]u(t)$ amps

$= \mathbf{[-12+5e^{-3t}(\cos(4t-36.87^\circ)]u(t)}$ **volts**.

www.konkur.in

Chapter 16, Solution 41.

Find the output voltage $v_o(t)$ in the circuit of Fig. 16.64.

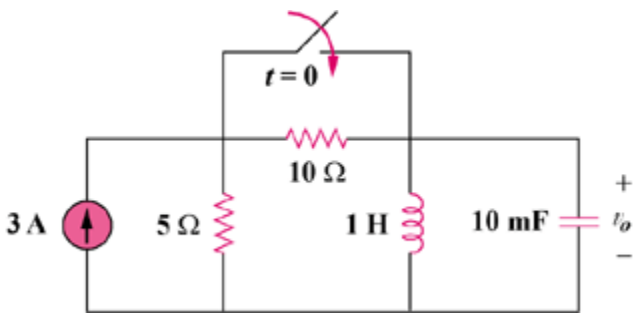

Figure 16.64
For Prob. 16.41.

Solution

Step 1. First we need to determine the initial conditions. We see that $v_o(0) = 0$ since the inductor becomes a short. We also note that the initial current through the inductor is the same as the current through the 10 Ω resistor or $i_L(0) = [3(5x10)/(5+10)]/10 = 1$ amp. Then we simplify the circuit and convert it into the s-domain and solve for V_o. We then perform a partial fraction expansion and convert into the time domain.

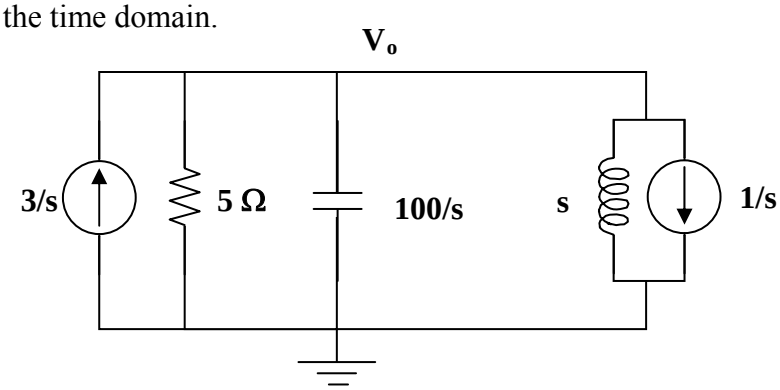

$$-[3/s] + [(V_o-0)/5] + [(V_o-0)/(100/s)] + [(V_o-0)/s] + [1/s] = 0.$$

Step 2. $[0.2+(s/100)+(1/s)]V_o = 2/s = [(s^2+20s+100)/(100s)]V_o$ or

$V_o = 200/[(s+10)^2]$ and

$$v_o(t) = \mathbf{[200te^{-10t}]u(t)\ volts}.$$

www.konkur.in

Chapter 16, Solution 42.

Given the circuit in Fig. 16.65, find $i(t)$ and $v(t)$ for $t > 0$.

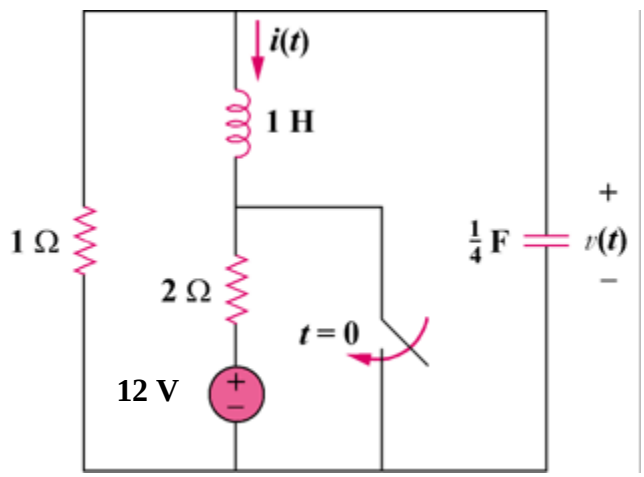

Figure 16.65
For Prob. 16.42.

Solution

Step 1. First we need to find the initial conditions. Since the inductor becomes a short and the capacitor becomes an open circuit, all the current flows through the 1 Ω and 2 Ω resistors or i(0) = –12/3 = –4 amps and v(0) = 4x1 = 4 volts. Next we need to convert the circuit into the s-domain and solve for V and I. Once we have done that, we can perform partial fraction expansions and convert back into the time domain.

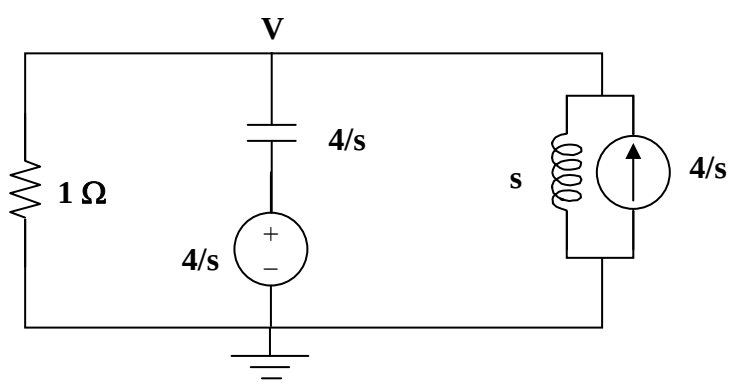

[(V–0)/1] + [(V–4/s)/(4/s)] + [(V–0)/s] – [4/s] = 0 and I = [(V–0)/s] – [4/s].

Step 2. [(1+(s/4)+(1/s)]V = [(s^2+4s+4)/(4s)]V = 1+4/s = (s+4)/s or
V = (4s+16)/[$(s+2)^2$] = [A/(s+2)]+[B/$(s+2)^2$] where As+2A + B = 4s+16 and
A = 4 and B = 16–2A =8. I = [4/(s(s+2))]+[8/(s$(s+2)^2$)]–4/s

www.konkur.in

The partial fraction expansion is straight forward for the first and third terms, but the second term takes a little work. $8/(s(s+2)^2 = [a/s]+[b/(s+2)]+[c/(s+2)^2]$ or $as^2+a4s+a4+bs^2+b2s+cs = 8$ or $a = 2$, $b = -2$, and $c = -4$.

Thus, $I = [2/s]+[-2/(s+2)]+[2/s]+[-2/(s+2)]+[-4/(s+2)^2]-4/s = -[4/(s+2)] - [4/(s+2)^2]$ and we finally get,

$$v(t) = \mathbf{[4e^{-2t} + 8te^{-2t}]u(t)\ volts} \text{ and}$$

$$i(t) = \mathbf{[-4e^{-2t} - 4te^{-2t}]u(t)\ amps}.$$

www.konkur.in

Chapter 16, Solution 43.

Determine $i(t)$ for $t > 0$ in the circuit of Fig. 16.66.

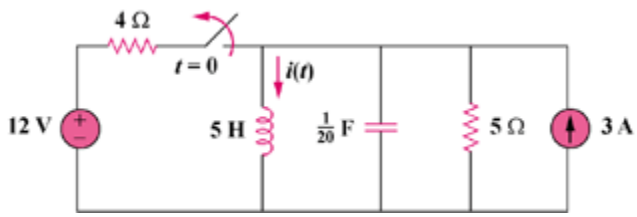

Figure 16.66
For Prob. 16.43.

Solution

Step 1. First we need to determine the initial conditions. Then we need to transform the circuit into the s-domain. Once in the s-domain we can calculate V and I. We then perform a partial fraction expansion on I and convert back into the time domain. Since the inductor looks like a short just before the switch opens, $v_C(0) = 0$ and $i(0) = (12/4)+3 = 6$ amps.

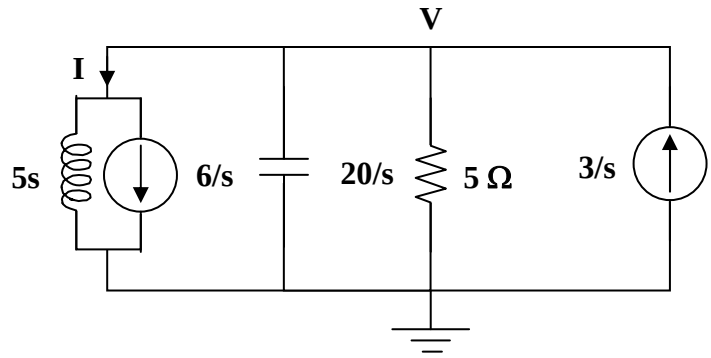

$[(V–0)/(5s)] + [6/s] + [(V–0)/(20/s)] + [(V–0)/5] – [3/s] = 0$ and $I = [(V–0)/(5s)] + [6/s]$.

Step 2. $[(1/(5s))+(s/20)+(1/5)]V = [(s^2+4s+4)/(20s)]V = –3/s$ or
$V = –60/(s+2)^2$ and $I = –[12/(s(s+2)^2)] + 6/s = [A/s] + [B/(s+2)] + [C/(s+2)^2] + (6/s)$ where $A = –3$ and $A(s^2+4s+4) + B(s^2+2s) + Cs = –12$
$= –3s^2 – 12s –12 + Bs^2 + B(2s) + Cs$ or $–3B = 0$ or $B = 3$ and
$–12 + 6 + C = 0$ or $C = 6$.

$$i(t) = \mathbf{[3+3e^{-2t}+6te^{-2t}]u(t)\ amps}.$$

www.konkur.in

Chapter 16, Solution 44.

For the circuit in Fig. 16.67, find $i(t)$ for $t > 0$.

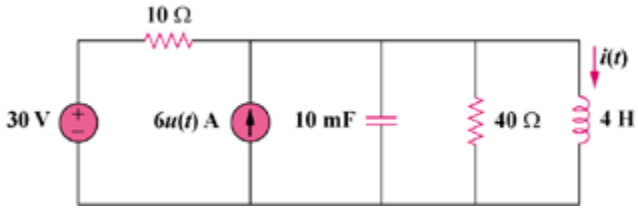

Figure 16.67
For Prob. 16.44.

Solution

Step 1. First we identify the initial conditions. Then we simplify the circuit (for t > 0) and then transform it into the s-domain. We then solve for the node voltage, V, and then find I. Finally we perform a partial fraction expansion and convert the answer into the time domain. For t < 0, the inductor looks like a short circuit producing $v_C(0) = 0$ and $i(0) = 30/10 = 3$ amps.

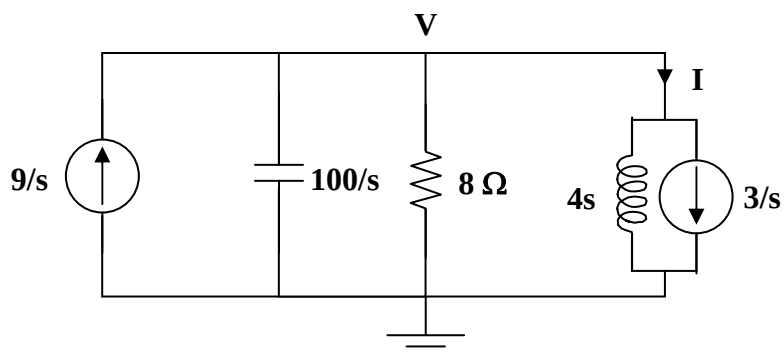

$-[9/s] + [(V-0)/(100/s)] + [(V-0)/8] + [(V-0)/(4s)] + [3/s] = 0$ and
$I = [(V-0)/(4s)] + [3/s]$.

Step 2. $[(s/100)+(1/8)+1/(4s)]V = [(s^2+12.5s+25)/(100s)]V = 6/s$ or
$V = 600/[(s+2.5)(s+10)]$ and $I = 150/[s(s+2.5)(s+10)]+[3/s]$
$= [A/s] + [B/(s+2.5)] + [C/(s+10)]$ where $A = 6+3 = 9$; $B = 150/[-2.5(-2.5+10)] = -8$; and $C = 150/[-10(-10+2.5)] = 2$.

$$i(t) = \mathbf{[9-8e^{-2.5t}+2e^{-10t}]u(t)\ amps}.$$

www.konkur.in

Chapter 16, Solution 45.

Find $v(t)$ for $t > 0$ in the circuit in Fig. 16.68.

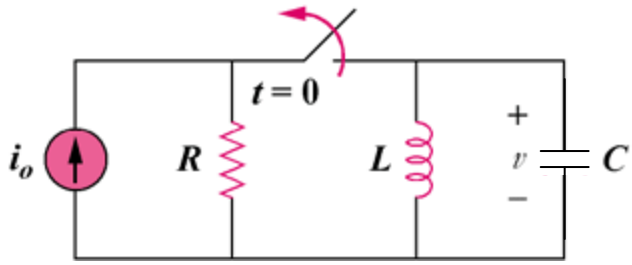

Figure 16.68
For Prob. 16.45.

Solution

Step 1. First, determine the initial conditions. Next convert the circuit into the s-domain and solve for V. Perform a partial fraction expansion and convert back into the time domain. For t < 0, the inductor looks like a short circuit so that v(0) = 0 and $i_L(0) = i_o$.

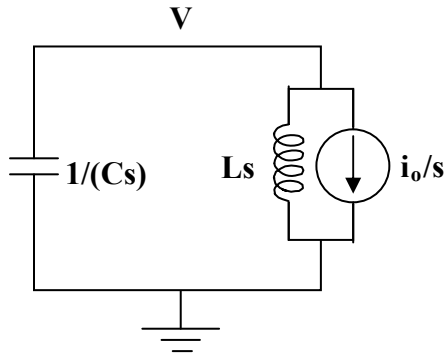

$[(V–0)/(1/(Cs))] + [(V–0)/(Ls)] + [i_o/s] = 0.$

Step 2. $[Cs+(1/(Ls))]V = [C\{s^2+(1/(LC))\}/s]V = –i_o/s$ or
$V = –(i_o/C)/[(s^2+1/(LC))]$. If we let $\boldsymbol{\omega^2 = 1/(LC)}$ then we get,
$V = –(i_o/C)/[(s^2+\omega^2)] = –(i_o/C)/[(s+j\omega)(s–j\omega)] = [A/(s+j\omega)]+[B/(s–j\omega)]$ where
$A = –(i_o/C)/(–j2\omega) = [i_o/(2\omega C)]\angle–90^\circ$ and $B = –(i_o/C)/(j2\omega) = [i_o/(2\omega C)]\angle–90^\circ$.
Thus,

$$v(t) = [i_o/(2\omega C)][e^{-j\omega t-90^\circ}+e^{j\omega t+90^\circ}] = \mathbf{[i_o/(\omega C)]\cos(\omega t+90^\circ)u(t)\ volts}.$$

www.konkur.in

Chapter 16, Solution 46.

Consider the following circuit.

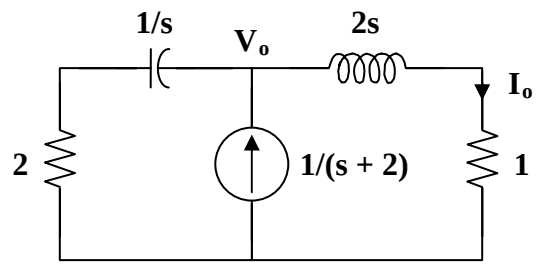

Applying KCL at node o,

$$\frac{1}{s+2} = \frac{V_o}{2s+1} + \frac{V_o}{2+1/s} = \frac{s+1}{2s+1}V_o$$

$$V_o = \frac{2s+1}{(s+1)(s+2)}$$

$$I_o = \frac{V_o}{2s+1} = \frac{1}{(s+1)(s+2)} = \frac{A}{s+1} + \frac{B}{s+2}$$

$$A = 1, \qquad B = -1$$

$$I_o = \frac{1}{s+1} - \frac{1}{s+2}$$

$$i_o(t) = \left(\mathbf{e^{-t} - e^{-2t}}\right)\mathbf{u(t)\ A}$$

www.konkur.in

Chapter 16, Solution 47.

We first find the initial conditions from the circuit in Fig. (a).

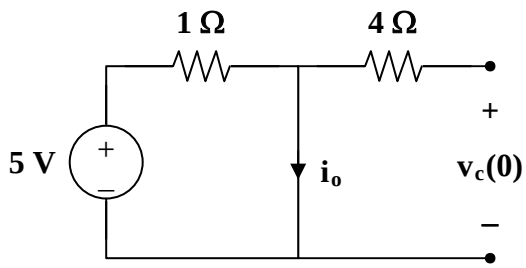

(a)

$$i_o(0^-) = 5\text{ A}, \quad v_c(0^-) = 0\text{ V}$$

We now incorporate these conditions in the s-domain circuit as shown in Fig.(b).

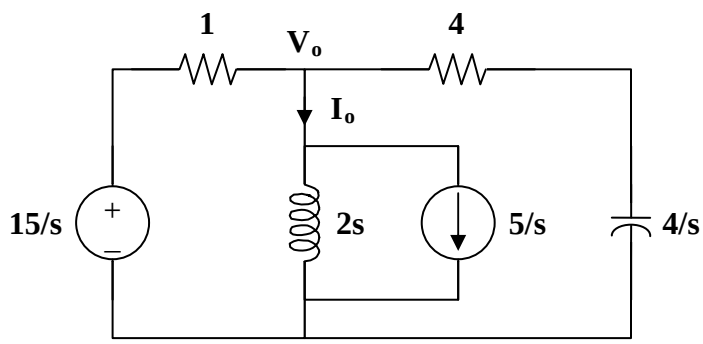

(b)

At node o,

$$\frac{V_o - 15/s}{1} + \frac{V_o}{2s} + \frac{5}{s} + \frac{V_o - 0}{4 + 4/s} = 0$$

$$\frac{15}{s} - \frac{5}{s} = \left(1 + \frac{1}{2s} + \frac{s}{4(s+1)}\right)V_o$$

$$\frac{10}{s} = \frac{4s^2 + 4s + 2s + 2 + s^2}{4s(s+1)}V_o = \frac{5s^2 + 6s + 2}{4s(s+1)}V_o$$

$$V_o = \frac{40(s+1)}{5s^2 + 6s + 2}$$

$$I_o = \frac{V_o}{2s} + \frac{5}{s} = \frac{4(s+1)}{s(s^2 + 1.2s + 0.4)} + \frac{5}{s}$$

$$I_o = \frac{5}{s} + \frac{A}{s} + \frac{Bs + C}{s^2 + 1.2s + 0.4}$$

www.konkur.in

$$4(s+1) = A(s^2 + 1.2s + 0.4) + Bs^s + Cs$$

Equating coefficients :

$$s^0: \quad 4 = 0.4A \longrightarrow A = 10$$
$$s^1: \quad 4 = 1.2A + C \longrightarrow C = -1.2A + 4 = -8$$
$$s^2: \quad 0 = A + B \longrightarrow B = -A = -10$$

$$I_o = \frac{5}{s} + \frac{10}{s} - \frac{10s+8}{s^2 + 1.2s + 0.4}$$
$$I_o = \frac{15}{s} - \frac{10(s+0.6)}{(s+0.6)^2 + 0.2^2} - \frac{10(0.2)}{(s+0.6)^2 + 0.2^2}$$

$$i_o(t) = \left[\mathbf{15 - 10\,e^{-0.6t}\left(\cos(0.2\,t) - \sin(0.2\,t)\right)}\right]\ \mathbf{u(t)\ A}$$

www.konkur.in

Chapter 16, Solution 48.

First we need to transform the circuit into the s-domain.

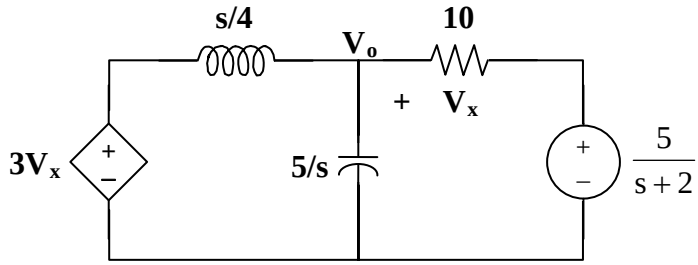

$$\frac{V_o - 3V_x}{s/4} + \frac{V_o - 0}{5/s} + \frac{V_o - \frac{5}{s+2}}{10} = 0$$

$$40V_o - 120V_x + 2s^2V_o + sV_o - \frac{5s}{s+2} = 0 = (2s^2 + s + 40)V_o - 120V_x - \frac{5s}{s+2}$$

$$\text{But, } V_x = V_o - \frac{5}{s+2} \rightarrow V_o = V_x + \frac{5}{s+2}$$

We can now solve for V_x.

$$\mathbf{(2s^2 + s + 40)\left(V_x + \frac{5}{s+2}\right) - 120V_x - \frac{5s}{s+2} = 0}$$

$$\mathbf{2(s^2 + 0.5s - 40)V_x = -10\frac{(s^2 + 20)}{s+2}}$$

$$\mathbf{V_x = -5\frac{(s^2 + 20)}{(s+2)(s^2 + 0.5s - 40)}}$$

www.konkur.in

Chapter 16, Solution 49.

We first need to find the initial conditions. For $t < 0$, the circuit is shown in Fig. (a).

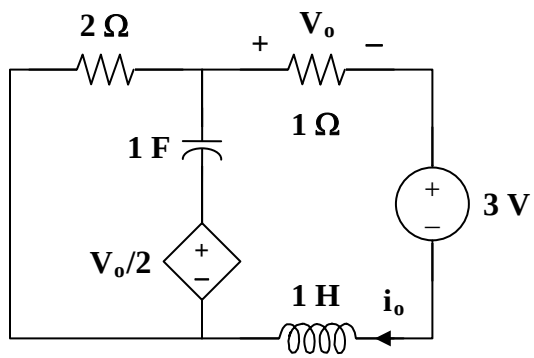

(a)

To dc, the capacitor acts like an open circuit and the inductor acts like a short circuit. Hence,

$$i_L(0) = i_o = \frac{-3}{3} = -1\text{ A}, \qquad v_o = -1\text{ V}$$

$$v_c(0) = -(2)(-1) - \left(\frac{-1}{2}\right) = 2.5\text{ V}$$

We now incorporate the initial conditions for $t > 0$ as shown in Fig. (b).

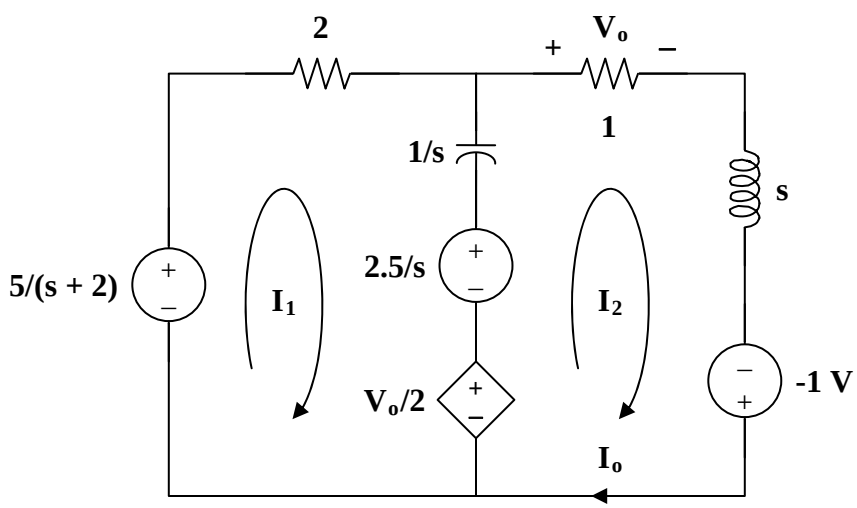

(b)

For mesh 1,

$$\frac{-5}{s+2} + \left(2 + \frac{1}{s}\right)I_1 - \frac{1}{s}I_2 + \frac{2.5}{s} + \frac{V_o}{2} = 0$$

But, $V_o = I_o = I_2$

$$\left(2+\frac{1}{s}\right)I_1 + \left(\frac{1}{2}-\frac{1}{s}\right)I_2 = \frac{5}{s+2} - \frac{2.5}{s} \qquad (1)$$

For mesh 2,

$$\left(1+s+\frac{1}{s}\right)I_2 - \frac{1}{s}I_1 + 1 - \frac{V_o}{2} - \frac{2.5}{s} = 0$$

$$-\frac{1}{s}I_1 + \left(\frac{1}{2}+s+\frac{1}{s}\right)I_2 = \frac{2.5}{s} - 1 \qquad (2)$$

Put (1) and (2) in matrix form.

$$\begin{bmatrix} 2+\frac{1}{s} & \frac{1}{2}-\frac{1}{s} \\ \frac{-1}{s} & \frac{1}{2}+s+\frac{1}{s} \end{bmatrix} \begin{bmatrix} I_1 \\ I_2 \end{bmatrix} = \begin{bmatrix} \frac{5}{s+2} - \frac{2.5}{s} \\ \frac{2.5}{s} - 1 \end{bmatrix}$$

$$\Delta = 2s + 2 + \frac{3}{s}, \qquad \Delta_2 = -2 + \frac{4}{s} + \frac{5}{s(s+2)}$$

$$I_o = I_2 = \frac{\Delta_2}{\Delta} = \frac{-2s^2+13}{(s+2)(2s^2+2s+3)} = \frac{A}{s+2} + \frac{Bs+C}{2s^2+2s+3}$$

$$-2s^2 + 13 = A(2s^2+2s+3) + B(s^2+2s) + C(s+2)$$

Equating coefficients :

s^2: $\quad -2 = 2A + B$

s^1: $\quad 0 = 2A + 2B + C$

s^0: $\quad 13 = 3A + 2C$

Solving these equations leads to

$A = 0.7143$, $\quad B = -3.429$, $\quad C = 5.429$

$$I_o = \frac{0.7143}{s+2} - \frac{3.429s - 5.429}{2s^2+2s+3} = \frac{0.7143}{s+2} - \frac{1.7145s - 2.714}{s^2+s+1.5}$$

$$I_o = \frac{0.7143}{s+2} - \frac{1.7145(s+0.5)}{(s+0.5)^2+1.25} + \frac{(3.194)(\sqrt{1.25})}{(s+0.5)^2+1.25}$$

$$i_o(t) = \left[\mathbf{0.7143\,e^{-2t} - 1.7145\,e^{-0.5t}\cos(1.25t) + 3.194\,e^{-0.5t}\sin(1.25t)}\right]\mathbf{u(t)\ A}$$

www.konkur.in

Chapter 16, Solution 50.

For the circuit in Fig. 16.73, find $v(t)$ for $t > 0$. Assume that $v(0^+) = 4$ V and $i(0^+) = 2$ A.

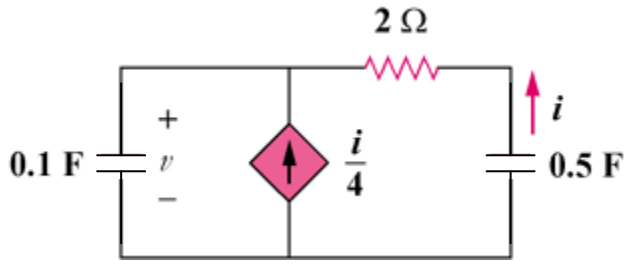

Figure 16.73
For Prob. 16.50.

Solution

Step 1. Determine the initial condition of the second capacitor and then convert the circuit into the s-domain. Finally, solve for V, perform a partial fraction expansion and convert the answer back into the time domain. Since v(0) = 4 volts and i(0) = 2 amps then $-4-2(2)+v_2(0)$ = or $v_2(0) = 8$.

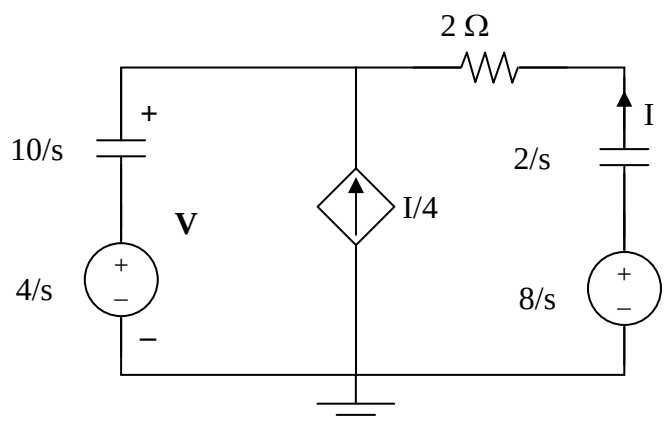

[(V–4/s)/(10/s)]–[I/4]+[(V–8/s)/(2+2/s)] = 0 and I = [((8/s)–V)/(2+2/s)]
= [4/(s+1)]–0.5sV/(s+1)

Step 2. [(V–4/s)/(10/s)]+[0.125sV/(s+1)]–[1/(s+1)]+[(V–8/s)/(2+2/s)]
[(s/10)+(0.125s/(s+1))+(0.5s/(s+1))]V =
[0.4+4/(s+1)]+[1/(s+1)] = (0.4s+5.4)/(s+1)
= [(s^2+s+6.25s)/(10(s+1))]V = [s(s+7.25)/(10(s+1))]V or
V = 4(s+13.5)/[s(s+7.25)] = [A/s]+[B/(s+7.25)] where A = 4(13.5)/7.25 = 7.748
and B = 4(–7.25+13.5)/(–7.25) = –3.448 or

$$v(t) = \mathbf{[7.748–3.448e^{-7.25t}]u(t)\ volts}.$$

www.konkur.in

Chapter 16, Solution 51.

In the circuit of Fig. 16.74, find $i(t)$ for $t > 0$.

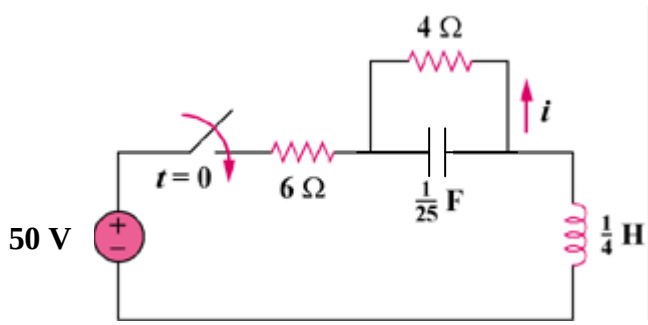

Figure 16.74
For Prob. 16.51.

Solution

Step 1. First we note that the initial conditions for the capacitor and inductor have to be equal to zero. Next we simplify the circuit and then convert the circuit into the s-domain and solve for V. Then we can solve for I and then perform a partial fraction expansion and convert I back into the time domain.

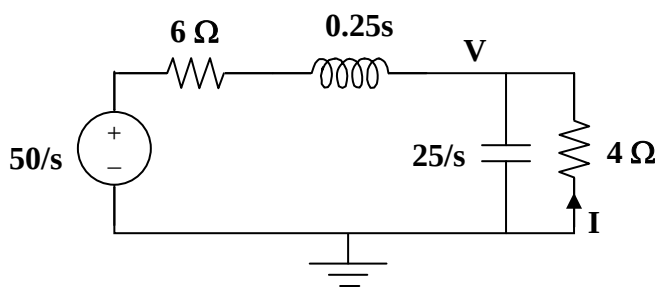

[(V–50/s)/(0.25(s+24))]+[s(V–0)/25]+[(V–0)/4] = 0 and I = [(0–V)/4] = –V/4.

Step 2. [(4/(s+24))+(s/25)+0.25]V = [(s^2+24s+6.25s+100+150)/(25(s+24))]V
= [(s^2+30.25s+250)/(25(s+24))]V
= [{(s+15.125+j4.608)(s+15.125–j4.608)}/(25(s+24))]V = [200/(s(s+24))] or
V = 5,000/[s(s+15.125+j4.608)(s+15.125–j4.608)] and
I = –1250/[s(s+15.125+j4.608)(s+15.125–j4.608)] = [A/s]+[B/(s+15.125+j4.608)]
+[C/(s+15.125–j4.608)] where A = –1250/250 = –5;
B = –1250/[(–15.125–j4.608)(–j9.216)] = 1250∠180˚/[(15.811∠–163.06˚)(9.216∠–90˚)]
= 8.578∠73.06˚; and C = 1250∠180˚/[(15.811∠163.06˚)(9.216∠90˚)] = 8.578∠–73.06˚.
Thus, i(t) = [–5+8.578$e^{-15.125t}$($e^{-j4.608t+73.06˚}$+$e^{j4.608-73.06˚}$)]u(t) amps

i(t) = **[–5+17.156$e^{-15.125t}$cos(4.608t–73.06˚)]u(t) amps**.

www.konkur.in

Chapter 16, Solution 52.

If the switch in Fig. 16.75 has been closed for a long time before $t = 0$ but is opened at $t = 0$, determine i_x and v_R for $t > 0$.

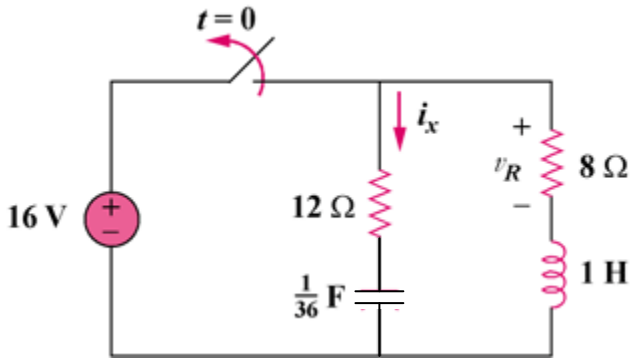

Figure 16.75
For Prob. 16.52.

Solution

Step 1. Fist we need to determine the initial conditions. Just before the switch opens, $v_C(0) = 16$ volts and $i_L(0) = 2$ amps. Next we convert the circuit into the s-domain.

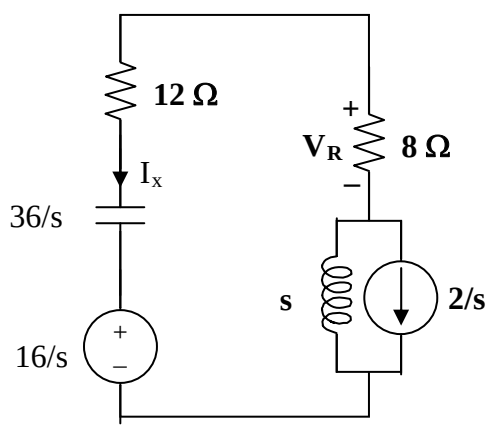

We can now write a mesh equation (this time going in the counter-clockwise direction). $[s(I_x+2/s)]+[8I_x]+[12I_x]+[(36/s)I_x]+(16/s) = 0$ and $V_R = -8I_x$.

Step 2. $[s+8+12+(36/s)]I_x = [(s^2+20s+36)/s]I_x = -2-16/s = -[2(s+8)/s]$ or
$I_x = -2(s+8)/[(s+2)(s+18)] = [A/(s+2)]+[B/(s+18)]$ where
$A = -2(-2+8)/(-2+18) = -2x6/16 = -0.75$ and $B = -2(-18+8)/(-18+2) = -1.25$
thus,

$$i_x(t) = \mathbf{[-0.75e^{-2t}-1.25e^{-18t}]u(t)\ amps} \text{ and}$$
$$v_R(t) = -8i_x(t) = \mathbf{[6e^{-2t}+10e^{-18t}]u(t)\ volts}.$$

www.konkur.in

Chapter 16, Solution 53.

In the circuit of Fig. 16.76, the switch has been in position 1 for a long time but moved to position 2 at $t = 0$. Find:

(a) $v(0^+)$, $dv(0^+)/dt$
(b) $v(t)$ for $t \geq 0$.

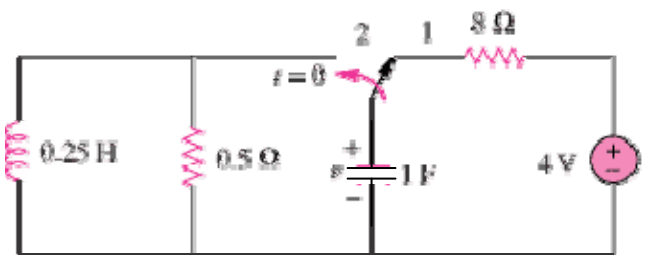

Figure 16.76
For Prob. 16.53.

Solution

Step 1. Clearly $i_L(0) = 0$ and $v(0) =$ **4 volts**. When the switch moves to 2, $i_C(0^+) = Cdv(0)/dt = -4/0.5 =$ **–8 volts/second** $= 1dv(0)/dt$. Next we convert the circuit into the s-domain and solve for V. Then we perform a partial fraction expansion and then convert back into the time domain.

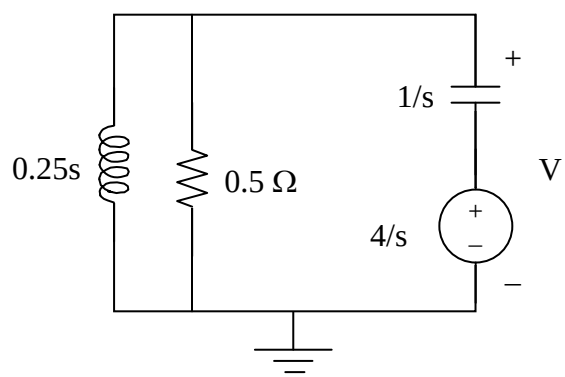

$[(V-0)/(0.25s)]+[(V-0)/0.5]+[(V-4/s)s/1] = 0.$

Step 2. $[(4/s)+2+s]V = [(s^2+2s+4)/s]V = 4$ or $V = 4s/[(s+1+j1.7321)(s+1-j1.7321)]$
$= [A/(s+1+j1.7321)] + [B/(s+1-j1.7321)]$ where
$A = 4(-1-j1.7321)/(3.464\angle-90^\circ) = 4(2\angle-120^\circ)/(3.464\angle-90^\circ) = 2.309\angle-30^\circ$ and
$B = 4(2\angle120^\circ)/(3.464\angle90^\circ) = 2.309\angle30^\circ$ or
$v(t) = 2.309e^{-t}[e^{-j1.7321t-30^\circ}+e^{j1.7321t+30^\circ}]u(t)$ volts or

$$v(t) = \mathbf{[4.618e^{-t}\cos(1.7321t+30^\circ)]u(t)\ volts}.$$

www.konkur.in

Chapter 16, Solution 54.

The switch in Fig. 16.77 has been in position 1 for $t < 0$. At $t = 0$, it is moved from position 1 to the top of the capacitor at t = 0. Please note that the switch is a make before break switch, it stays in contact with position 1 until it makes contact with the top of the capacitor and then breaks the contact at position 1. Determine $v(t)$.

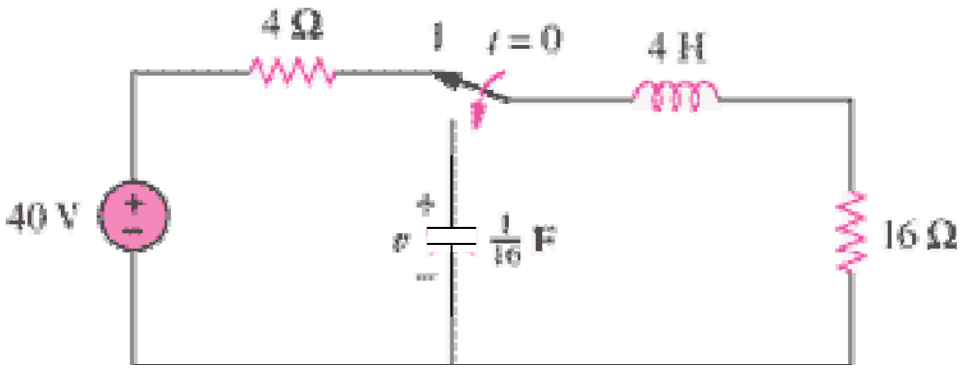

Figure 16.77
For Prob. 16.54.

Solution

Step 1. First determine the initial conditions and then transform the circuit into the s-domain and solve for V. Then perform a partial fraction expansion and then find v(t). We will assume that the value of v(0) = 0. $i_L(0) = 40/20 = 2$ amps.

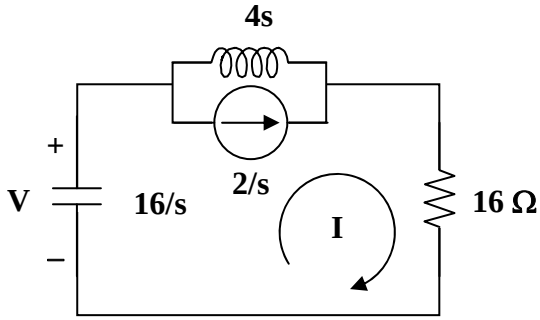

[16/s]I + [4s](I–2/s) + 16I = 0 and V = [16/s](–I).

Step 2. $[(16/s)+4s+16]I = [4(s^2+4s+4)/s]I = 8$ or
$I = 8s/[4(s+2)^2] = 2s/[(s+2)^2]$ and $V = -32/[(s+2)^2]$

$$v(t) = \mathbf{[-32te^{-2t}]u(t)\ volts}.$$

www.konkur.in

Chapter 16, Solution 55.

Obtain i_1 and i_2 for $t > 0$ in the circuit of Fig. 16.78.

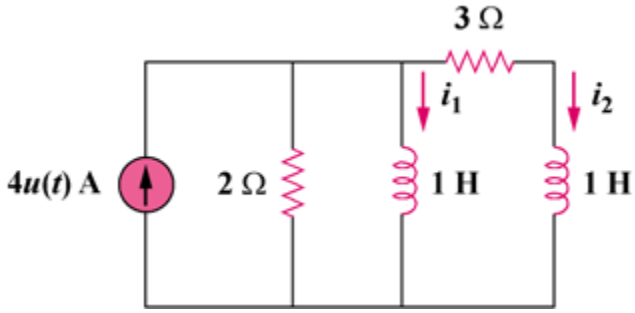

Figure 16.78
For Prob. 16.55.

Solution

Step 1. The first thing we do is to determine the initial conditions. Since there is no excitation of the circuit before t = 0, all initial conditions must be zero. Next we convert the circuit into the s-domain. Then use nodal analysis and eventually solve for I_1 and I_2, then perform a partial fraction expansion and convert back into the time domain.

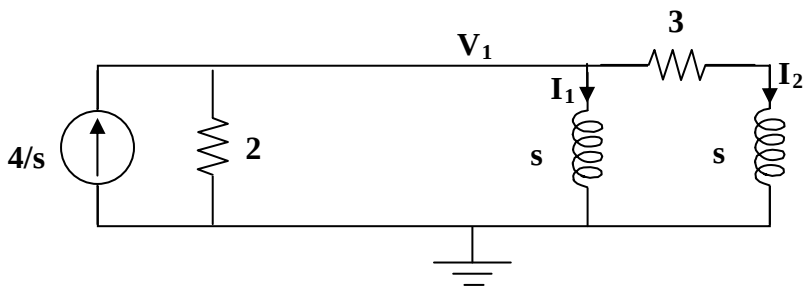

$-[4/s]+[(V_1-0)/2]+[(V_1-0)/s]+[(V_1-0)/(s+3)] = 0$ and $I_1 = [(V_1-0)/s]$ and $I_2 = [(V_1-0)/(s+3)]$.

Step 2. $\{[1/2]+[1/s]+[1/(s+3)]\}V_1 = 4/s = \{[s^2+3s+2s+6+2s]/[2s(s+3)]\}V_1$ or

$V_1 = 8(s+3)/[s^2+7s+6] = 8(s+3)/[(s+1)(s+6)]$ and $I_1 = 8(s+3)/[s(s+1)(s+6)]$ $= [A/s]+[B/(s+1)]+[C/(s+6)]$ where $A = 8x3/6 = 4$; $B = 8(-1+3)/[(-1)(-1+6)]$ $= -16/5 = -3.2$; $C = 8(-6+3)/[(-6)(-6+1)] = -24/30 = -0.8$. Thus,

$$i_1(t) = \mathbf{[4-3.2e^{-t}-0.8e^{-6t}]u(t)\ amps}.$$

$I_2 = [(V_1-0)/(s+3)] = 8/[(s+1)(s+6)] = [A/(s+1)] + [B/(s+6)]$ where $A = 8/5 = 1.6$ and $B = 8/(-6+1) = -1.6$. Thus,

$$i_2(t) = \mathbf{[1.6e^{-t}-1.6e^{-6t}]u(t)\ amps}.$$

$[4-3.2e^{-t}-0.8e^{-6t}]u(t)$ amps, $[1.6e^{-t}-1.6e^{-6t}]u(t)$ amps

www.konkur.in

Chapter 16, Solution 56.

We apply mesh analysis to the s-domain form of the circuit as shown below.

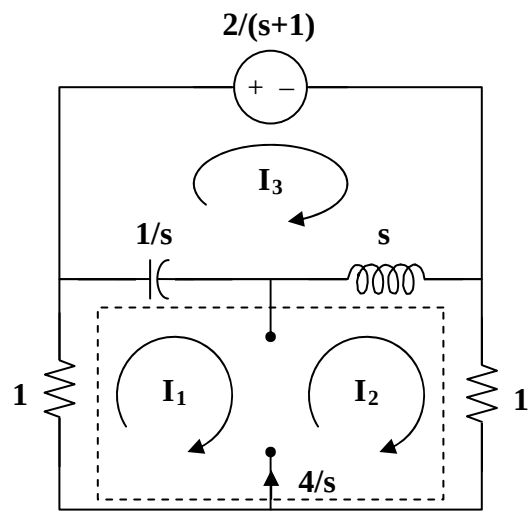

For mesh 3,

$$\frac{2}{s+1}+\left(s+\frac{1}{s}\right)I_3-\frac{1}{s}I_1-sI_2=0 \qquad (1)$$

For the supermesh,

$$\left(1+\frac{1}{s}\right)I_1+(1+s)I_2-\left(\frac{1}{s}+s\right)I_3=0 \qquad (2)$$

Adding (1) and (2) we get, $I_1 + I_2 = -2/(s+1)$ (3)

But $-I_1 + I_2 = 4/s$ (4)

Adding (3) and (4) we get, $I_2 = (2/s) - 1/(s+1)$ (5)

Substituting (5) into (4) yields, $I_1 = -(2/s) - (1/(s+1))$ (6)

Substituting (5) and (6) into (1) we get,

$$\frac{2}{s^2}+\frac{1}{s(s+1)}-2+\frac{s}{s+1}+\left(\frac{s^2+1}{s}\right)I_3=-\frac{2}{s+1}$$

$$I_3=-\frac{2}{s}+\frac{1.5-0.5j}{s+j}+\frac{1.5+0.5j}{s-j}$$

www.konkur.in

Substituting (3) into (1) and (2) leads to

$$-\left(s+\frac{1}{s}\right)I_2+\left(s+\frac{1}{s}\right)I_3=\frac{2(-s^2+2s+2)}{s^2(s+1)} \tag{4}$$

$$\left(2+s+\frac{1}{s}\right)I_2-\left(s+\frac{1}{s}\right)I_3=-\frac{4(s+1)}{s^2} \tag{5}$$

We can now solve for I_o.

$$I_o = I_2 - I_3 = (4/s) - (1/(s+1)) + ((-1.5+0.5j)/(s+j)) + ((-1.5-0.5)/(s-j))$$

or

$$i_o(t) = \mathbf{[4 - e^{-t} + 1.5811e^{-jt+161.57^\circ} + 1.5811e^{jt-161.57^\circ}]u(t)A}$$

This is a challenging problem. I did check it with using a Thevenin equivalent circuit and got the same exact answer.

www.konkur.in

Chapter 16, Solution 57.

$v_s(t) = 3u(t) - 3u(t-1)$ or $V_s = \frac{3}{s} - \frac{e^{-s}}{s} = \frac{3}{s}(1 - e^{-s})$

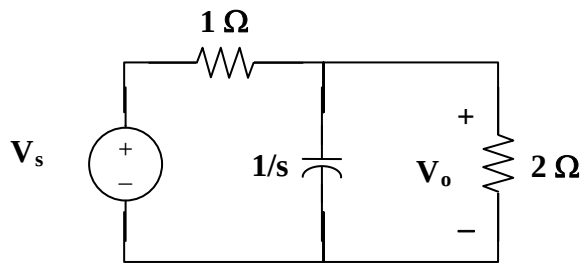

$$\frac{V_o - V_s}{1} + sV_o + \frac{V_o}{2} = 0 \rightarrow (s + 1.5)V_o = V_s$$

$$V_o = \frac{3}{s(s+1.5)}(1 - e^{-s}) = \left(\frac{2}{s} - \frac{2}{s+1.5}\right)(1 - e^{-s})$$

$$v_o(t) = \underline{[(2 - 2e^{-1.5t})u(t) - (2 - 2e^{-1.5(t-1)})u(t-1)]V}$$

(a) $(3/s)[1-e^{-s}]$, (b) $[(2-2e^{-1.5t})u(t) - (2-2e^{-1.5(t-1)})u(t-1)]$ V

www.konkur.in

Chapter 16, Solution 58.

Using Fig. 16.81, design a problem to help other students to better understand circuit analysis in the s-domain with circuits that have dependent sources.

Although there are many ways to solve this problem, this is an example based on the same kind of problem asked in the third edition.

Problem

In the circuit of Fig. 16.81, let $i(0) = 1$ A, $v_o(0) = 2$ V, and $v_s = 4\,e^{-2t}\,u(t)$ V. Find $v_o(t)$ for $t > 0$.

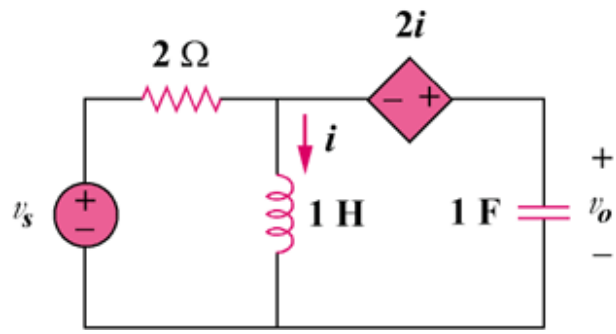

Figure 16.81
For Prob. 16.58.

Solution

We incorporate the initial conditions in the s-domain circuit as shown below.

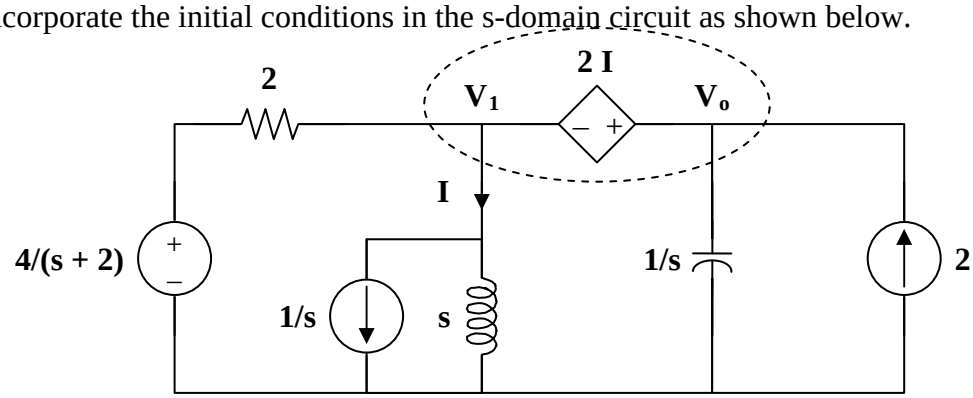

At the supernode,

$$\frac{(4/(s+2)) - V_1}{2} + 2 = \frac{V_1}{s} + \frac{1}{s} + sV_o$$

$$\frac{2}{s+2} + 2 = \left(\frac{1}{2} + \frac{1}{s}\right)V_1 + \frac{1}{s} + s\,V_o \qquad (1)$$

www.konkur.in

But $\quad V_o = V_1 + 2I \quad$ and $\quad I = \dfrac{V_1 + 1}{s}$

$$V_o = V_1 + \frac{2(V_1+1)}{s} \longrightarrow V_1 = \frac{V_o - 2/s}{(s+2)/s} = \frac{s\,V_o - 2}{s+2} \qquad (2)$$

Substituting (2) into (1)

$$\frac{2}{s+2} + 2 - \frac{1}{s} = \left(\frac{s+2}{2s}\right)\left[\left(\frac{s}{s+2}\right)V_o - \frac{2}{s+2}\right] + s\,V_o$$

$$\frac{2}{s+2} + 2 - \frac{1}{s} + \frac{1}{s} = \left[\left(\frac{1}{2}\right) + s\right]V_o$$

$$\frac{2s+4+2}{(s+2)} = \frac{2s+6}{s+2} = (s+1/2)V_o$$

$$V_o = \frac{2s+6}{(s+2)(s+1/2)} = \frac{A}{s+1/2} + \frac{B}{s+2}$$

$$A = (-1+6)/(-0.5+2) = 3.333, \quad B = (-4+6)/(-2+1/2) = -1.3333$$

$$V_o = \frac{3.333}{s+1/2} - \frac{1.3333}{s+2}$$

Therefore,

$$v_o(t) = \underline{\mathbf{(3.333e^{-t/2} - 1.3333e^{-2t})u(t)\ V}}$$

Chapter 16, Solution 59.

We incorporate the initial conditions and transform the current source to a voltage source as shown.

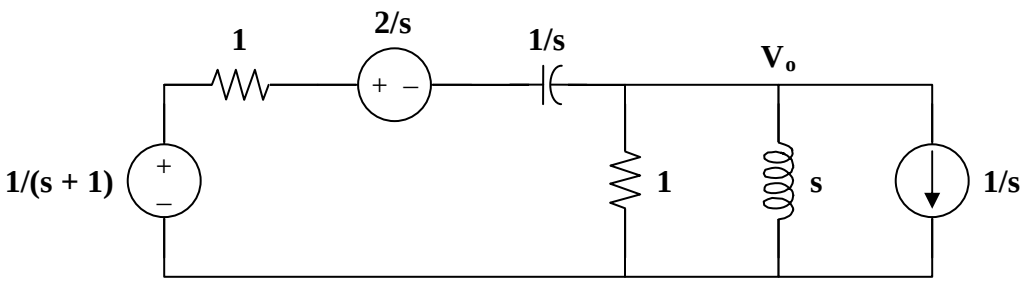

At the main non-reference node, KCL gives

$$\frac{1/(s+1) - 2/s - V_o}{1 + 1/s} = \frac{V_o}{1} + \frac{V_o}{s} + \frac{1}{s}$$

$$\frac{s}{s+1} - 2 - s\,V_o = (s+1)(1+1/s)\,V_o + \frac{s+1}{s}$$

$$\frac{s}{s+1} - \frac{s+1}{s} - 2 = (2s + 2 + 1/s)\,V_o$$

$$V_o = \frac{-2s^2 - 4s - 1}{(s+1)(2s^2 + 2s + 1)}$$

$$V_o = \frac{-s - 2s - 0.5}{(s+1)(s^2 + s + 0.5)} = \frac{A}{s+1} + \frac{Bs + C}{s^2 + s + 0.5}$$

$$A = (s+1)\,V_o\big|_{s=-1} = 1$$

$$-s^2 - 2s - 0.5 = A\,(s^2 + s + 0.5) + B\,(s^2 + s) + C\,(s+1)$$

Equating coefficients :

s^2 : $\quad -1 = A + B \quad \longrightarrow \quad B = -2$

s^1 : $\quad -2 = A + B + C \quad \longrightarrow \quad C = -1$

s^0 : $\quad -0.5 = 0.5A + C = 0.5 - 1 = -0.5$

$$V_o = \frac{1}{s+1} - \frac{2s+1}{s^2 + s + 0.5} = \frac{1}{s+1} - \frac{2\,(s+0.5)}{(s+0.5)^2 + (0.5)^2}$$

$$v_o(t) = \left[\mathbf{e^{-t} - 2\,e^{-t/2}\cos(t/2)}\right]\mathbf{u(t)\ V}$$

www.konkur.in

Chapter 16, Solution 60.

Find the response $v_R(t)$ for $t > 0$ in the circuit in Fig. 16.83. Let $R = 3\ \Omega$, $L = 2$ H, and $C = 1/18$ F.

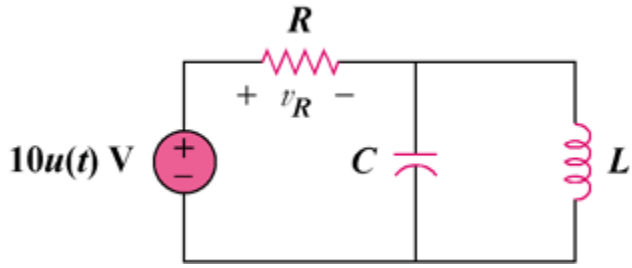

Figure 16.83
For Prob. 16.60.

Solution

Step 1. First convert the circuit into the s-domain. Then use nodal analysis and eventually solve for V_R, then perform a partial fraction expansion and convert back into the time domain.

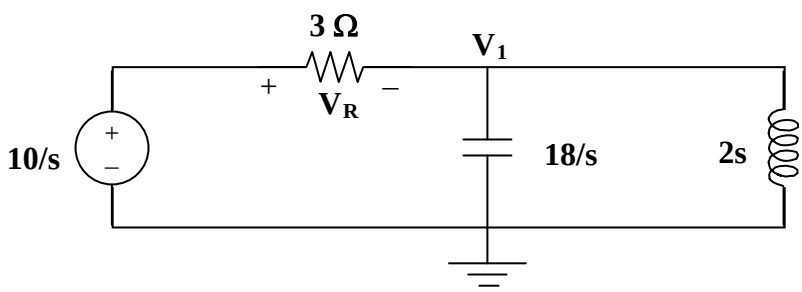

$[(V_1-10/s)/3]+[(V_1-0)/(18/s)]+[(V_1-0)/(2s)] = 0$ and $V_R = (10/s)-V_1$.

Step2. $[(1/3)+(s/18)+1/(2s)]V_1 = 3.333/s = [(s^2+6s+9)/(18s)]V_1$ or $V_1 = 60/[(s+3)^2]$ and $V_R = (10/s)-60/[(s+3)^2]$.

Thus,

$$v_R(t) = \mathbf{[10-60te^{-3t}]u(t)\ volts}.$$

www.konkur.in

Chapter 16, Solution 61.

The s-domain version of the circuit is shown below.

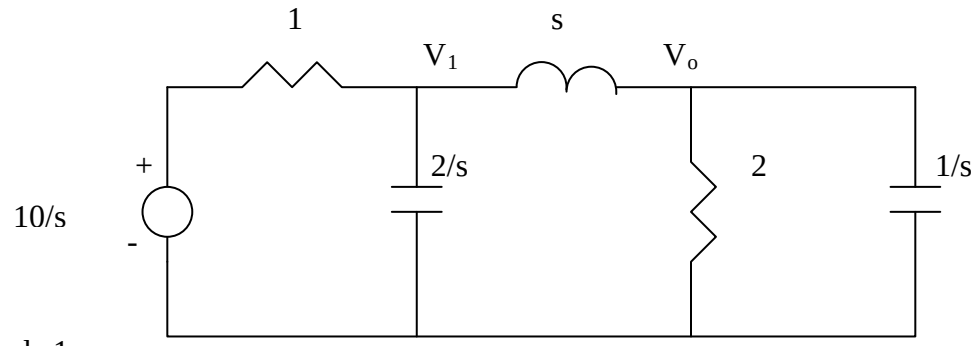

At node 1,

$$\frac{V_1 - \frac{10}{s}}{1} + \frac{V_1 - V_o}{s} + \frac{s}{2}(V_1 - 0) = 0 \quad \longrightarrow \quad \left(\frac{s^2}{2} + s + 1\right)V_1 + (-1)V_o = 10 \qquad (1)$$

At node 2,

$$\frac{V_o - V_1}{s} + \frac{V_o - 0}{2} + s(V_o - 0) = 0 \quad \longrightarrow \quad V_1 = (s^2 + 0.5s + 1)V_o \qquad (2)$$

Substituting (2) into (1) gives

$$10 = [0.5(s^2 + 2s + 2)(s^2 + 0.5s + 1)V_o - V_o = 0.5(s^4 + 2.5s^3 + 4s^2 + 3s + 2 - 2)V_o$$

$$V_o = \frac{20}{s(s^3 + 2.5s^2 + 4s + 3)}$$

Use MATLAB to find the roots.

```
>> p=[1 2.5 4 3]

p =

   1.0000    2.5000    4.0000    3.0000

>> r=roots(p)

r =

  -0.6347 + 1.4265i
  -0.6347 - 1.4265i
  -1.2306
```

www.konkur.in

Thus,

$$V_o = \frac{20}{s(s+1.2306)(s+0.6347+j1.4265)(s+0.6347-j1.4265)}$$

$$= \frac{A}{s} + \frac{B}{(s+1.2306)} + \frac{C}{(s+0.6347+j1.4265)} + \frac{D}{(s+0.6347-j1.4265)}$$

Where A = 20/3 = 6.667; B =

$$\frac{20}{(-1.2306)(-1.2306+0.6347+j1.4265)(-1.2306+0.6347-j1.4265)}$$

$$= \frac{-16.252}{(0.3551+2.035)} = -6.8$$

$$C = \frac{20}{(-0.6347-j1.4265)(-0.6347-j1.4265+1.2306)(-j2.853)}$$

$$= \frac{20}{(1.5613\angle -113.99°)(1.546\angle -67.33°)(2.853\angle -90°)} = \frac{20}{6.886\angle 88.68°} = 2.904\angle -88.68°$$

$$D = \frac{20}{(-0.6347+j1.4265)(-0.6347+j1.4265+1.2306)(j2.853)}$$

$$= \frac{20}{(1.5613\angle 113.99°)(1.546\angle 67.33°)(2.853\angle 90°)} = \frac{20}{6.886\angle -88.68°} = 2.904\angle 88.68°$$

$$V_o = \frac{6.667}{s} + \frac{-6.8}{(s+1.2306)} + \frac{2.904\angle -88.68°}{(s+0.6347+j1.4265)} + \frac{2.904\angle 88.68°}{(s+0.6347-j1.4265)} \text{ or}$$

$v_o(t) = [6.667–6.8e^{-1.2306t}+2.904e^{-0.6347t}(e^{-(1.4265t+88.68^\circ)}+e^{(1.4265t+88.68^\circ)})]u(t)$ volts or

$$= \mathbf{[6.667–6.8e^{-1.2306t}+5.808e^{-0.6347t}cos(1.4265t+88.68^\circ)]u(t)\ V}.$$

Answer does check for initial values and final values.

www.konkur.in

Chapter 16, Solution 62.

Using Fig. 16.85, design a problem to help other students better understand solving for node voltages by working in the s-domain.

Although there are many ways to solve this problem, this is an example based on the same kind of problem asked in the third edition.

Problem

Find the node voltages v_1 and v_2 in the circuit of Fig. 16.85 using Laplace transform technique. Assume that $i_s = 12e^{-t}\,u(t)$ A and that all initial conditions are zero.

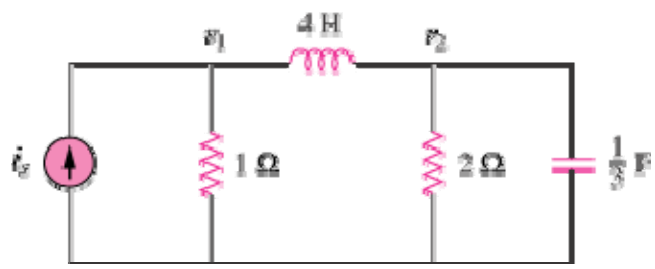

Figure 16.85
For Prob. 16.62.

Solution

The s-domain version of the circuit is shown below.

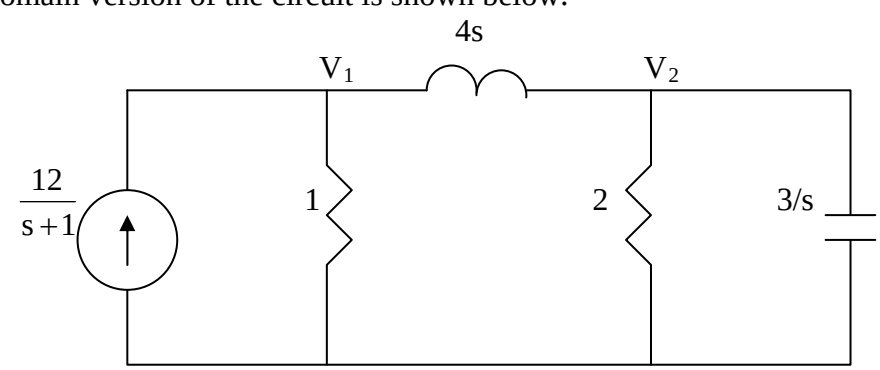

At node 1,

$$\frac{12}{s+1} = \frac{V_1}{1} + \frac{V_1 - V_2}{4s} \quad \longrightarrow \quad \frac{12}{s+1} = V_1\left(1 + \frac{1}{4s}\right) - \frac{V_2}{4s} \qquad (1)$$

At node 2,

$$\frac{V_1 - V_2}{4s} = \frac{V_2}{2} + \frac{s}{3}V_2 \quad \longrightarrow \quad V_1 = V_2\left(\frac{4}{3}s^2 + 2s + 1\right) \qquad (2)$$

Substituting (2) into (1),

$$\frac{12}{s+1} = V_2\left[\left(\frac{4}{3}s^2 + 2s + 1\right)\left(1 + \frac{1}{4s}\right) - \frac{1}{4s}\right] = \left(\frac{4}{3}s^2 + \frac{7}{3}s + \frac{3}{2}\right)V_2$$

$$V_2 = \frac{9}{(s+1)(s^2 + \frac{7}{4}s + \frac{9}{8})} = \frac{A}{(s+1)} + \frac{Bs + C}{(s^2 + \frac{7}{4}s + \frac{9}{8})}$$

$$9 = A(s^2 + \frac{7}{4}s + \frac{9}{8}) + B(s^2 + s) + C(s+1)$$

Equating coefficients:

s^2 : $\quad 0 = A + B$

s : $\quad 0 = \frac{7}{4}A + B + C = \frac{3}{4}A + C \quad \longrightarrow \quad C = -\frac{3}{4}A$

constant : $\quad 9 = \frac{9}{8}A + C = \frac{3}{8}A \quad \longrightarrow \quad A = 24,\ B = -24,\ C = -18$

$$V_2 = \frac{24}{(s+1)} - \frac{24s + 18}{(s^2 + \frac{7}{4}s + \frac{9}{8})} = \frac{24}{(s+1)} - \frac{24(s + 7/8)}{(s + \frac{7}{8})^2 + \frac{23}{64}} + \frac{3}{(s + \frac{7}{8})^2 + \frac{23}{64}}$$

Taking the inverse of this produces:

$$\mathbf{v_2(t) = \left[24e^{-t} - 24e^{-0.875t}\cos(0.5995t) + 5.004e^{-0.875t}\sin(0.5995t)\right]u(t)V}$$

Similarly,

$$V_1 = \frac{9\left(\frac{4}{3}s^2 + 2s + 1\right)}{(s+1)(s^2 + \frac{7}{4}s + \frac{9}{8})} = \frac{D}{(s+1)} + \frac{Es + F}{(s^2 + \frac{7}{4}s + \frac{9}{8})}$$

$$9\left(\frac{4}{3}s^2 + 2s + 1\right) = D(s^2 + \frac{7}{4}s + \frac{9}{8}) + E(s^2 + s) + F(s+1)$$

Equating coefficients:

www.konkur.in

s^2 : $\quad 12 = D + E$

s : $\quad 18 = \frac{7}{4}D + E + F$ or $6 = \frac{3}{4}D + F \longrightarrow F = 6 - \frac{3}{4}D$

constant : $\quad 9 = \frac{9}{8}D + F$ or $3 = \frac{3}{8}D \longrightarrow D = 8,\ E = 4,\ F = 0$

$$V_1 = \frac{8}{(s+1)} + \frac{4s}{(s^2 + \frac{7}{4}s + \frac{9}{8})} = \frac{8}{(s+1)} + \frac{4(s+7/8)}{(s+\frac{7}{8})^2 + \frac{23}{64}} - \frac{7/2}{(s+\frac{7}{8})^2 + \frac{23}{64}}$$

Thus,

$$\underline{\mathbf{v_1(t) = \left[8e^{-t} + 4e^{-0.875t}\cos(0.5995t) - 5.838e^{-0.875t}\sin(0.5995t)\right]u(t)V}}$$

www.konkur.in

Chapter 16, Solution 63.

The s-domain form of the circuit with the initial conditions is shown below.

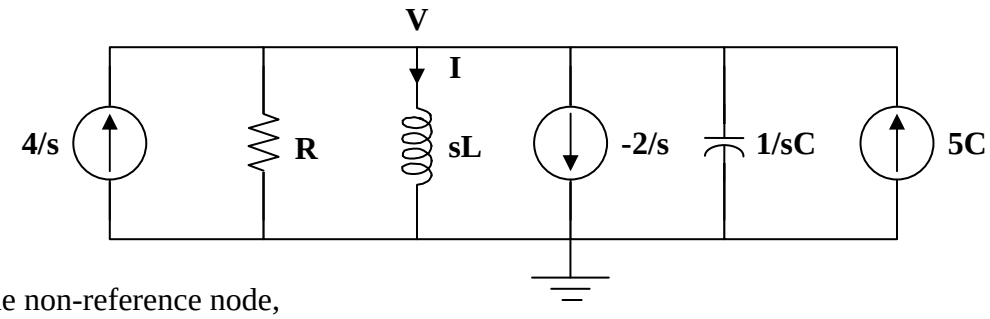

At the non-reference node,

$$\frac{4}{s}+\frac{2}{s}+5C=\frac{V}{R}+\frac{V}{sL}+sCV$$

$$\frac{6+5sC}{s}=\frac{CV}{s}\left(s^2+\frac{s}{RC}+\frac{1}{LC}\right)$$

$$V=\frac{5s+6/C}{s^2+(s/RC)+(1/LC)}$$

But $\frac{1}{RC}=\frac{1}{10/80}=8$, $\frac{1}{LC}=\frac{1}{4/80}=20$

$$V=\frac{5s+480}{s^2+8s+20}=\frac{5(s+4)}{(s+4)^2+2^2}+\frac{(230)(2)}{(s+4)^2+2^2}$$

$$v(t)=\mathbf{[5\,e^{-4t}\cos(2t)+230\,e^{-4t}\sin(2t)]u(t)\ V}$$

$$I=\frac{V}{sL}=\frac{5s+480}{4s(s^2+8s+20)}$$

$$I=\frac{1.25s+120}{s(s^2+8s+20)}=\frac{A}{s}+\frac{Bs+C}{s^2+8s+20}$$

$A=6$, $B=-6, C=-46.75$

$$I=\frac{6}{s}-\frac{6s+46.75}{s^2+8s+20}=\frac{6}{s}-\frac{6(s+4)}{(s+4)^2+2^2}-\frac{(11.375)(2)}{(s+4)^2+2^2}$$

$$i(t)=\mathbf{[6-6\,e^{-4t}\cos(2t)-11.375\,e^{-4t}\sin(2t)]u(t)\ A}$$

Checking, Ldi/dt = 4{24 e^{-4t}cos(2t) + 12 e^{-4t}sin(2t) + 45.5 e^{-4t}sin(2t) – 22.75 e^{-4t}cos(2t)}u(t) = [5 e^{-4t}cos(2t) + 230 e^{-4t}sin(2t)]u(t). Answer checks.

www.konkur.in

Chapter 16, Solution 64.

When the switch is position 1, v(0)=12, and $i_L(0) = 0$. When the switch is in position 2, we have the circuit as shown below.

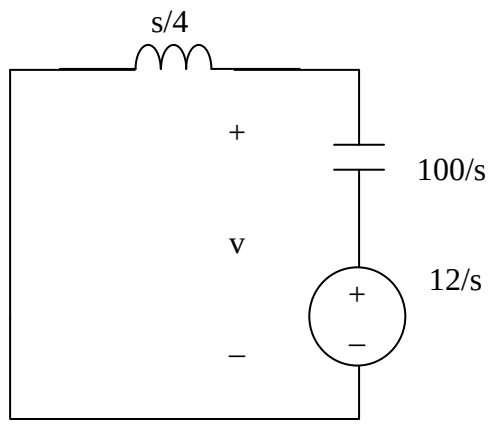

$$10mF = 0.01F \longrightarrow \frac{1}{sC} = \frac{100}{s}$$

$$I = \frac{12/s}{s/4 + 100/s} = \frac{48}{s^2 + 400}, \qquad V = sLI = \frac{s}{4}I = \frac{12s}{s^2 + 400}$$

v(t) = **[12cos(20t)]u(t) V**

Chapter 16, Solution 65.

For $t > 0$, the circuit in the s-domain is shown below.

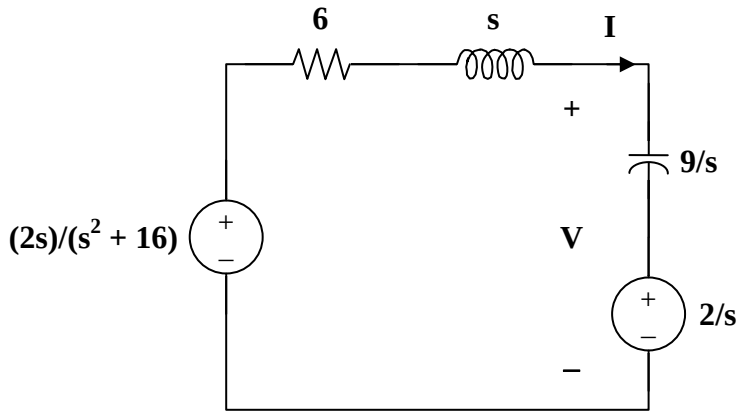

Applying KVL,

$$\frac{-2s}{s^2+16} + \left(6 + s + \frac{9}{s}\right)I + \frac{2}{s} = 0$$

$$I = \frac{-32}{(s^2+6s+9)(s^2+16)}$$

$$V = \frac{9}{s}I + \frac{2}{s} = \frac{2}{s} + \frac{-288}{s(s+3)^2(s^2+16)}$$

$$= \frac{2}{s} + \frac{A}{s} + \frac{B}{s+3} + \frac{C}{(s+3)^2} + \frac{Ds+E}{s^2+16}$$

$$-288 = A(s^4 + 6s^3 + 25s^2 + 96s + 144) + B(s^4 + 3s^3 + 16s^2 + 48s)$$
$$+ C(s^3 + 16s) + D(s^4 + 6s^3 + 9s^2) + E(s^3 + 6s^2 + 9s)$$

Equating coefficients :

s^0:	$-288 = 144A$	(1)
s^1:	$0 = 96A + 48B + 16C + 9E$	(2)
s^2:	$0 = 25A + 16B + 9D + 6E$	(3)
s^3:	$0 = 6A + 3B + C + 6D + E$	(4)
s^4:	$0 = A + B + D$	(5)

Solving equations (1), (2), (3), (4) and (5) gives

$A = -2$, $B = 2.202$, $C = 3.84$, $D = -0.202$, $E = 2.766$

$$V(s) = \frac{2.202}{s+3} + \frac{3.84}{(s+3)^2} - \frac{0.202s}{s^2+16} + \frac{(0.6915)(4)}{s^2+16}$$

$$v(t) = \mathbf{\{2.202e^{-3t} + 3.84te^{-3t} - 0.202\cos(4t) + 0.6915\sin(4t)\}u(t)\ V}$$

Chapter 16, Solution 66.

Consider the op-amp circuit below where R_1 = 20 kΩ, R_2 = 10 kΩ, C = 50 μF, and $v_s(t) = [3e^{-5t}]u(t)$ V.

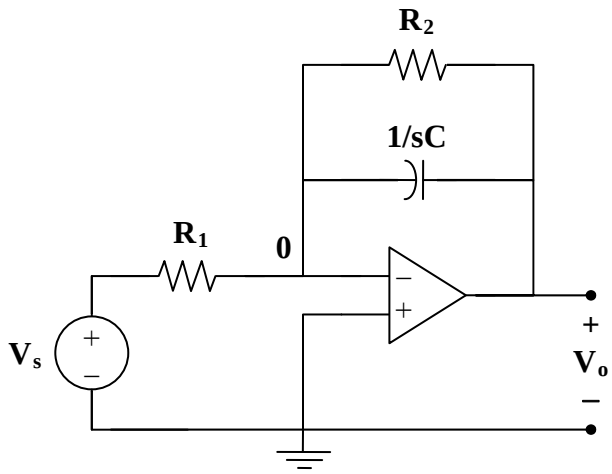

At node 0,

$$\frac{V_s - 0}{R_1} = \frac{0 - V_o}{R_2} + (0 - V_o)sC$$

$$V_s = R_1\left(\frac{1}{R_2} + sC\right)(-V_o)$$

$$\frac{V_o}{V_s} = \frac{-1}{sR_1C + R_1/R_2}$$

But $\frac{R_1}{R_2} = \frac{20}{10} = 2$, $\qquad R_1C = (20\times10^3)(50\times10^{-6}) = 1$

So, $\frac{V_o}{V_s} = \frac{-1}{s+2}$

$$v_s(t) = 3e^{-5t} \longrightarrow V_s = 3/(s+5)$$

$$V_o = \frac{-3}{(s+2)(s+5)} = \frac{A}{s+2} + \frac{B}{s+5} \text{ where } A = -1 \text{ and } B = 1.$$

$$V_o = \frac{1}{s+5} - \frac{1}{s+2}$$

$$v_o(t) = \left(\mathbf{e^{-5t} - e^{-2t}}\right)\mathbf{u(t)}\ \mathbf{V}.$$

www.konkur.in

Chapter 16, Solution 67.

Given the op amp circuit in Fig. 16.90. If $v_1(0^+) = 2$ V and $v_2(0^+) = 0$ V, find v_o for $t > 0$. Let $R = 100$ kΩ and C = 1 μF.

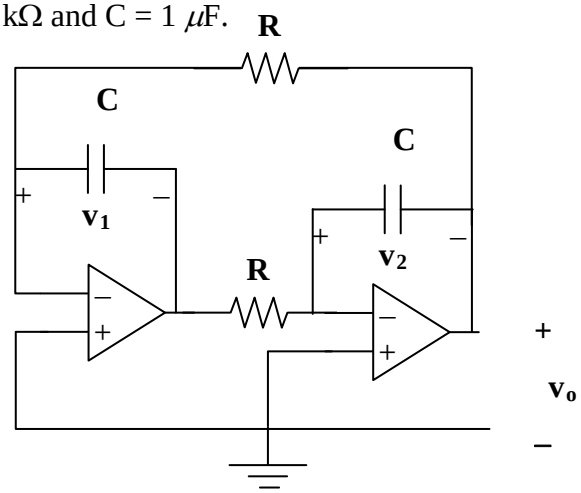

Figure 16.90
For Prob. 16.67.

Solution

Step 1. Convert the circuit into the s-domain and insert initial conditions. Next, solve for $V_o(s)$, then obtain the partial fraction expansion and convert back into the time domain.

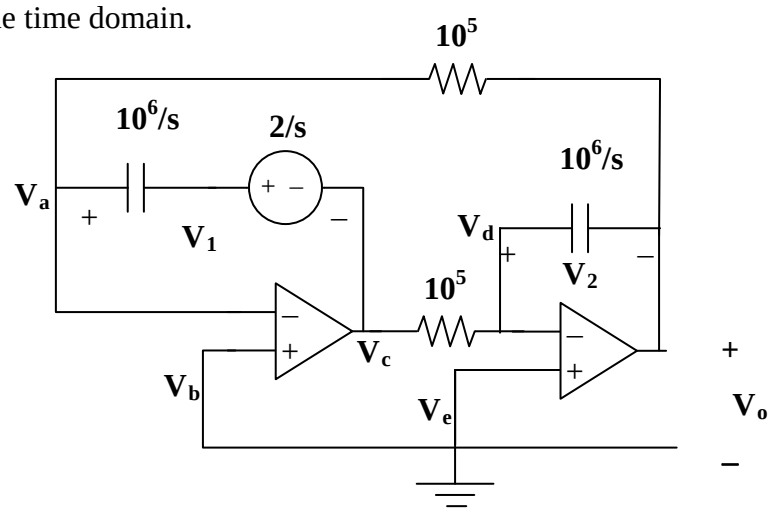

$[(V_a–(V_c+2/s))/(10^6/s)]+[(V_a–V_o)/10^5]+0 = 0$; $V_a = V_b = 0$ and
$[(V_d–V_c)/10^5]+[(V_d–V_o)/(10^6/s)]+0 = 0$; $V_d = V_e = 0$.

Step 2. $sV_c + 10V_o = –2$ and $10V_c + sV_o = 0$ or $V_c = –0.1sV_o$ thus,

$(–0.1s^2+10)V_o = –2$ or $V_o = 20/(s^2–100) = [A/(s–10)]+[B/(s+10)]$ where
$A = 20/(10+10) = 1$ and $B = 20/(–10–10) = –1$. This now leads to

$$v_o(t) = \mathbf{[e^{10t}–e^{–10t}]u(t)\ volts}.$$

It should be noted that this is an unstable circuit!

www.konkur.in

Chapter 16, Solution 68.

Obtain V_o/V_s in the op amp circuit in Fig. 8.91.

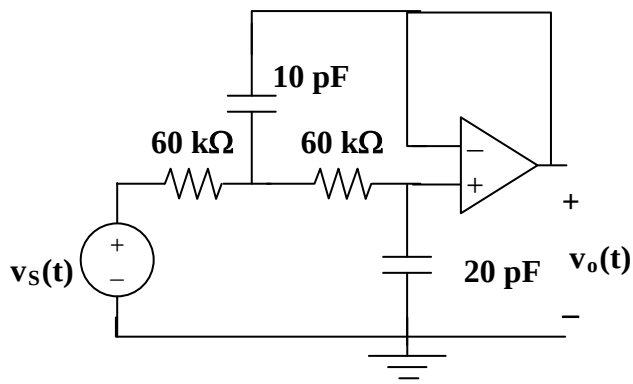

Figure 8.91
For Prob. 8.68.

Solution

Step 1. Convert the circuit into the s-domain and then solve for $V_o(s)$ in terms of $V_s(s)$. Then solve for $V_o/V_s = T(s)$.

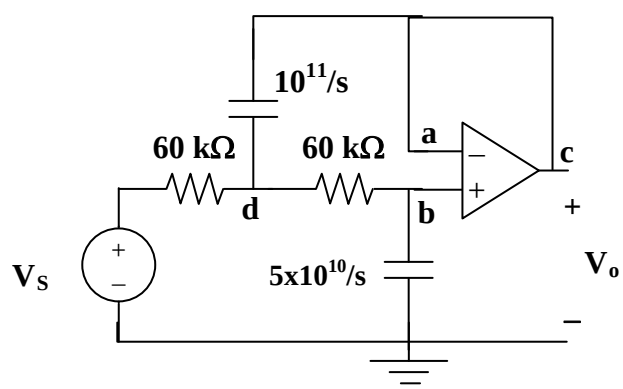

At a, $V_a = V_b = V_c = V_o$. At b, $[(V_b–V_d)/60k]+[(V_b–0)/(5x10^{10}/s)]+0 = 0$ or $[(V_o–V_d)/60k]+[(V_o–0)/(5x10^{10}/s)] = 0$ or $[(1/60k)V_d = [(1/60k)+(s/(5x10^{10}))]V_o$ or $V_d = [(1.2x10^{-6})s+1]V_o$.

At d, $[(V_d–V_s)/60k]+[(V_d–V_c)/(10^{11}/s)]+(V_d–V_b)/60k] = 0$ or
$[(2/60k)+(s/10^{11})]V_d–(s/10^{11})V_o–(1/60k)V_o = (1/60k)V_s$ or
$[(2/60k)+(s/10^{11})]\ [(1.2x10^{-6})s+1]V_o–(s/10^{11})V_o–(1/60k)V_o = (1/60k)V_s$ or
$[2+(6x10^{-7})s]\ [(1.2x10^{-6})s+1]V_o–(6x10^{-7})sV_o–V_o = V_s$ or
$[7.2x10^{-13}s^2+(2.4x10^{-6}+0.6x10^{-6}–0.6x10^{-6})s+(2–1)]V_o = V_s$ or

$$T(s) = V_o/V_s = \mathbf{1/[(7.2x10^{-}13)s^2+(2.4x10^{-6})s+1]}.$$

www.konkur.in

Chapter 16, Solution 69.

Find $I_1(s)$ and $I_2(s)$ in the following circuit.

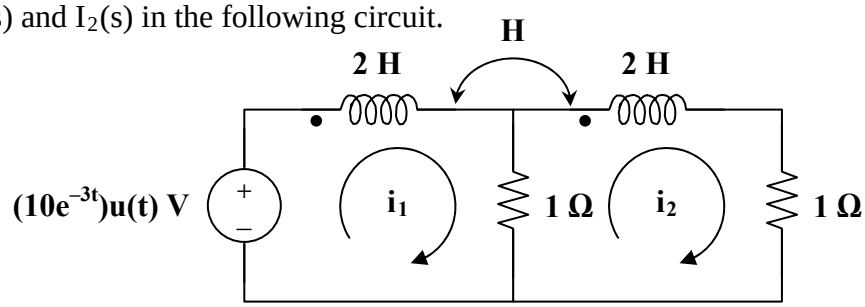

Solution

Step 1. We note that the initial conditions in this case are equal to zero. Next, we need to convert the circuit into the s-domain and use the model for mutually coupled circuits. Then we can write the mesh equations and solve for I_1 and I_2.

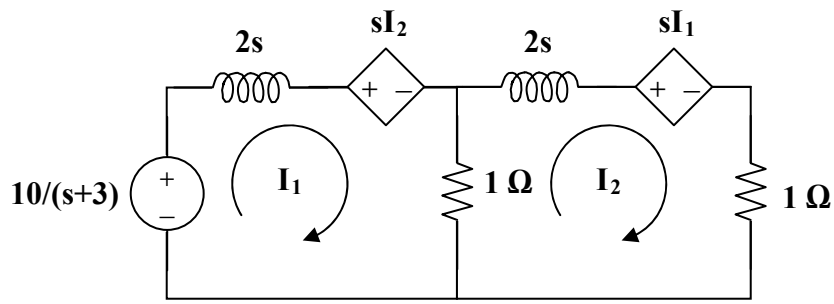

Step 2. $-[10/(s+3)] + 2sI_1 + sI_2 + 1(I_1-I_2) = 0$ and
$1(I_2-I_1) + 2sI_2 + sI_1 + 1I_2 = 0$. Simplifying we get,

$(2s+1)I_1 + (s-1)I_2 = 10/(s+3)$ and $(s-1)I_1 + (2s+1)I_2 = 0$.

We can solve this directly using substitution or use matrices. Let us use matrices.

$$\begin{bmatrix} 2s+1 & s-1 \\ s-1 & 2s+1 \end{bmatrix}\begin{bmatrix} I_1 \\ I_2 \end{bmatrix} = \begin{bmatrix} \dfrac{10}{(s+3)} \\ 0 \end{bmatrix}$$ The matrix inverse

$$\begin{bmatrix} 2s+1 & s-1 \\ s-1 & 2s+1 \end{bmatrix}^{-1} = \frac{\begin{bmatrix} 2s+1 & -s+1 \\ -s+1 & 2s+1 \end{bmatrix}}{4s^2+4s+1-s^2+2s-1} = \frac{\begin{bmatrix} 2s+1 & -s+1 \\ -s+1 & 2s+1 \end{bmatrix}}{3s(s+2)}$$

Therefore,

I_1 = **6.667(s+0.5)/[s(s+2)(s+3)]** and
I_2 = **–3.333(s–1)/[s(s+2)(s+3)]**

6.667(s+0.5)/[s(s+2)(s+3)], –3.333(s–1)/[s(s+2)(s+3)]

www.konkur.in

Chapter 16, Solution 70.

Using Fig. 16.93, design a problem to help other students better understand how to do circuit analysis with circuits that have mutually coupled elements by working in the s-domain.

Although there are many ways to solve this problem, this is an example based on the same kind of problem asked in the third edition.

Problem

For the circuit in Fig. 16.93, find $v_o(t)$ for $t > 0$.

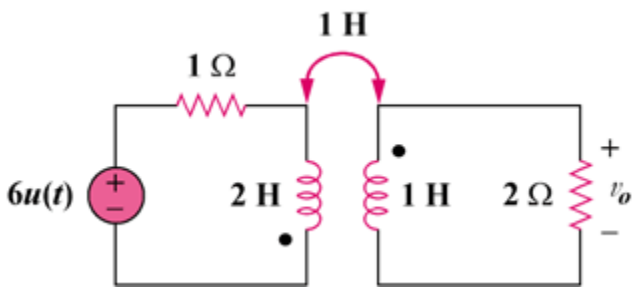

Figure 16.93
For Prob. 16.70.

Solution

Consider the circuit shown below.

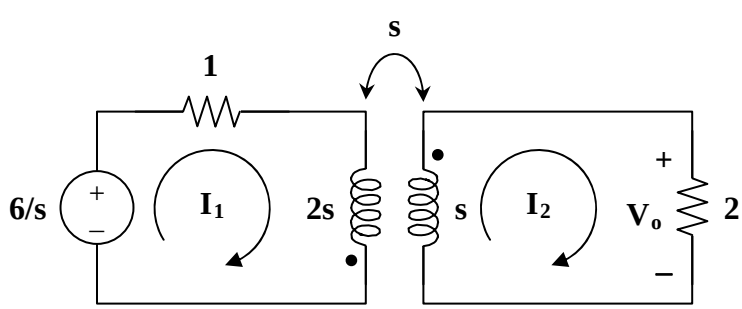

For mesh 1,

$$\frac{6}{s} = (1+2s)\,I_1 + s\,I_2 \qquad (1)$$

For mesh 2,

$$0 = s\,I_1 + (2+s)\,I_2$$

$$I_1 = -\left(1+\frac{2}{s}\right)I_2 \qquad (2)$$

www.konkur.in

Substituting (2) into (1) gives

$$\frac{6}{s} = -(1+2s)\left(1+\frac{2}{s}\right)I_2 + s\,I_2 = \frac{-(s^2+5s+2)}{s}I_2$$

or $$I_2 = \frac{-6}{s^2+5s+2}$$

$$V_o = 2\,I_2 = \frac{-12}{s^2+5s+2} = \frac{-12}{(s+0.438)(s+4.561)}$$

Since the roots of $s^2+5s+2=0$ are -0.438 and -4.561,

$$V_o = \frac{A}{s+0.438} + \frac{B}{s+4.561}$$

$$A = \frac{-12}{4.123} = -2.91, \qquad B = \frac{-12}{-4.123} = 2.91$$

$$V_o(s) = \frac{-2.91}{s+0.438} + \frac{2.91}{s+4.561}$$

$$v_o(t) = \underline{\mathbf{2.91\left[e^{-4.561t} - e^{0.438t}\right]u(t)\ V}}$$

www.konkur.in

Chapter 16, Solution 71.

Consider the following circuit.

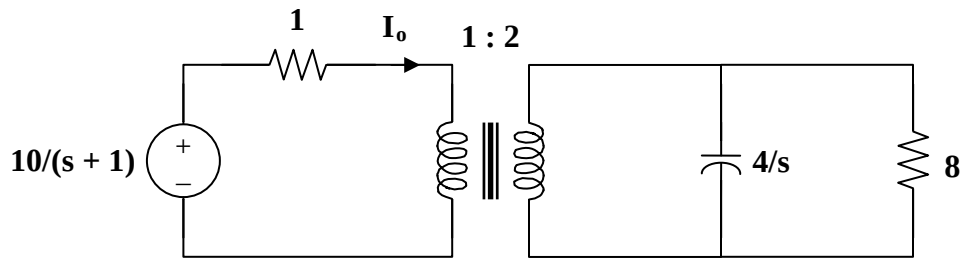

Let $\quad Z_L = 8 \,||\, \frac{4}{s} = \frac{(8)(4/s)}{8 + 4/s} = \frac{8}{2s+1}$

When this is reflected to the primary side,

$$Z_{in} = 1 + \frac{Z_L}{n^2}, \quad n = 2$$

$$Z_{in} = 1 + \frac{2}{2s+1} = \frac{2s+3}{2s+1}$$

$$I_o = \frac{10}{s+1} \cdot \frac{1}{Z_{in}} = \frac{10}{s+1} \cdot \frac{2s+1}{2s+3}$$

$$I_o = \frac{10s+5}{(s+1)(s+1.5)} = \frac{A}{s+1} + \frac{B}{s+1.5}$$

$$A = -10, \qquad B = 20$$

$$I_o(s) = \frac{-10}{s+1} + \frac{20}{s+1.5}$$

$$i_o(t) = \mathbf{10\left[2e^{-1.5t} - e^{-t}\right]u(t)\ A}$$

www.konkur.in

Chapter 16, Solution 72.

$$Y(s) = H(s)\,X(s)\,, \qquad X(s) = \frac{4}{s+1/3} = \frac{12}{3s+1}$$

$$Y(s) = \frac{12\,s^2}{(3s+1)^2} = \frac{4}{3} - \frac{8s+4/3}{(3s+1)^2}$$

$$Y(s) = \frac{4}{3} - \frac{8}{9}\cdot\frac{s}{(s+1/3)^2} - \frac{4}{27}\cdot\frac{1}{(s+1/3)^2}$$

$$\text{Let } G(s) = \frac{-8}{9}\cdot\frac{s}{(s+1/3)^2}$$

Using the time differentiation property,

$$g(t) = \frac{-8}{9}\cdot\frac{d}{dt}(t\,e^{-t/3}) = \frac{-8}{9}\left(\frac{-1}{3}t\,e^{-t/3} + e^{-t/3}\right)$$

$$g(t) = \frac{8}{27}t\,e^{-t/3} - \frac{8}{9}e^{-t/3}$$

Hence,

$$y(t) = \left[\frac{4}{3} + \frac{8}{27}t\,e^{-t/3} - \frac{8}{9}e^{-t/3} - \frac{4}{27}t\,e^{-t/3}\right]u(t)$$

$$y(t) = \left[\mathbf{\frac{4}{3} - \frac{8}{9}e^{-t/3} + \frac{4}{27}t\,e^{-t/3}}\right]\mathbf{u(t)}$$

www.konkur.in

Chapter 16, Solution 73.

$$x(t) = u(t) \longrightarrow X(s) = \frac{1}{s}$$

$$y(t) = 10\cos(2t) \longrightarrow Y(s) = \frac{10s}{s^2 + 4}$$

$$H(s) = \frac{Y(s)}{X(s)} = \frac{\mathbf{10s^2}}{\mathbf{s^2 + 4}}$$

www.konkur.in

Chapter 16, Solution 74.

Design a problem to help other students to better understand how to find outputs when given a transfer function and an input.

Although there are many ways to solve this problem, this is an example based on the same kind of problem asked in the third edition.

Problem

A circuit is known to have its transfer function as

$$H(s) = \frac{s+3}{s^2+4s+5}$$

Find its output when:

(a) the input is a unit step function

(b) the input is $6te^{-2t}\,u(t)$.

Solution

(a) $\quad Y(s) = H(s)\,X(s)$

$$= \frac{s+3}{s^2+4s+5}\cdot\frac{1}{s}$$

$$= \frac{s+3}{s(s^2+4s+5)} = \frac{A}{s} + \frac{Bs+C}{s^2+4s+5}$$

$$s+3 = A(s^2+4s+5) + Bs^2 + Cs$$

Equating coefficients :

$s^0: \quad 3 = 5A \longrightarrow A = 3/5$

$s^1: \quad 1 = 4A + C \longrightarrow C = 1 - 4A = -7/5$

$s^2: \quad 0 = A + B \longrightarrow B = -A = -3/5$

$$Y(s) = \frac{3/5}{s} - \frac{1}{5}\cdot\frac{3s+7}{s^2+4s+5}$$

$$Y(s) = \frac{0.6}{s} - \frac{1}{5}\cdot\frac{3(s+2)+1}{(s+2)^2+1}$$

$$y(t) = \left[\mathbf{0.6 - 0.6\,e^{-2t}\cos(t) - 0.2\,e^{-2t}\sin(t)}\right]\mathbf{u(t)}$$

www.konkur.in

(b) $x(t) = 6\,t\,e^{-2t} \longrightarrow X(s) = \dfrac{6}{(s+2)^2}$

$$Y(s) = H(s)\,X(s) = \frac{s+3}{s^2+4s+5}\cdot\frac{6}{(s+2)^2}$$

$$Y(s) = \frac{6(s+3)}{(s+2)^2(s^2+4s+5)} = \frac{A}{s+2} + \frac{B}{(s+2)^2} + \frac{Cs+D}{s^2+4s+5}$$

Equating coefficients :

s^3: $0 = A + C \longrightarrow C = -A$ (1)

s^2: $0 = 6A + B + 4C + D = 2A + B + D$ (2)

s^1: $6 = 13A + 4B + 4C + 4D = 9A + 4B + 4D$ (3)

s^0: $18 = 10A + 5B + 4D = 2A + B$ (4)

Solving (1), (2), (3), and (4) gives

$A = 6$, $B = 6$, $C = -6$, $D = -18$

$$Y(s) = \frac{6}{s+2} + \frac{6}{(s+2)^2} - \frac{6s+18}{(s+2)^2+1}$$

$$Y(s) = \frac{6}{s+2} + \frac{6}{(s+2)^2} - \frac{6(s+2)}{(s+2)^2+1} - \frac{6}{(s+2)^2+1}$$

$$y(t) = \left[\mathbf{6\,e^{-2t} + 6\,t\,e^{-2t} - 6\,e^{-2t}\cos(t) - 6\,e^{-2t}\sin(t)}\right]\mathbf{u(t)}$$

www.konkur.in

Chapter 16, Solution 75.

$$H(s) = \frac{Y(s)}{X(s)}, \qquad X(s) = \frac{1}{s}$$

$$Y(s) = \frac{4}{s} + \frac{1}{2(s+3)} - \frac{2s}{(s+2)^2 + 16} - \frac{(3)(4)}{(s+2)^2 + 16}$$

$$H(s) = s\,Y(s) = 4 + \frac{s}{2(s+3)} - \frac{2s(s+2)}{s^2 + 4s + 20} - \frac{12s}{s^2 + 4s + 20}$$

www.konkur.in

Chapter 16, Solution 76.

Consider the following circuit.

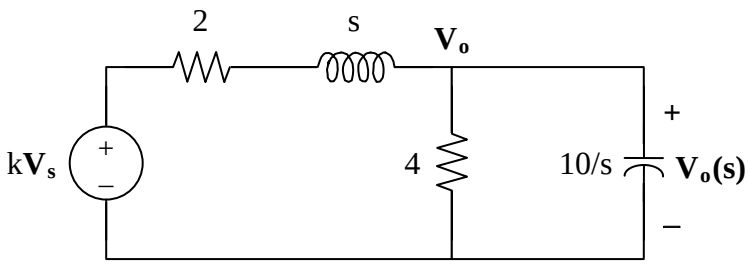

Using nodal analysis,

$$\frac{kV_s - V_o}{s+2} = \frac{V_o}{4} + \frac{V_o}{10/s}$$

$$V_s = (1/k)(s+2)\left(\frac{1}{s+2} + \frac{1}{4} + \frac{s}{10}\right)V_o = (1/k)\left(1 + \frac{1}{4}(s+2) + \frac{1}{10}(s^2+2s)\right)V_o$$

$$V_s = \frac{1}{20k}\left(2s^2 + 9s + 30\right)V_o$$

$$\frac{V_o}{V_s} = \mathbf{10k/(s^2+4.5s+15)}$$

www.konkur.in

Chapter 16, Solution 77.

Consider the following circuit.

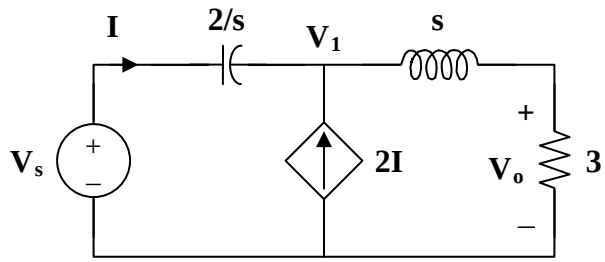

At node 1,

$$2I + I = \frac{V_1}{s+3}, \qquad \text{where} \quad I = \frac{V_s - V_1}{2/s}$$

$$3 \cdot \frac{V_s - V_1}{2/s} = \frac{V_1}{s+3}$$

$$\frac{V_1}{s+3} = \frac{3s}{2} V_s - \frac{3s}{2} V_1$$

$$\left(\frac{1}{s+3} + \frac{3s}{2}\right) V_1 = \frac{3s}{2} V_s$$

$$V_1 = \frac{3s(s+3)}{3s^2 + 9s + 2} V_s$$

$$V_o = \frac{3}{s+3} V_1 = \frac{9s}{3s^2 + 9s + 2} V_s$$

$$H(s) = \frac{V_o}{V_s} = \mathbf{\frac{9s}{3s^2 + 9s + 2}}$$

www.konkur.in

Chapter 16, Solution 78.

Taking the inverse Laplace transform of each term gives

$$h(t) = \underline{\left(5e^{-t} - 3e^{-2t} + 6e^{-4t}\right)u(t)}$$

www.konkur.in

Chapter 16, Solution 79.

(a) Consider the circuit shown below.

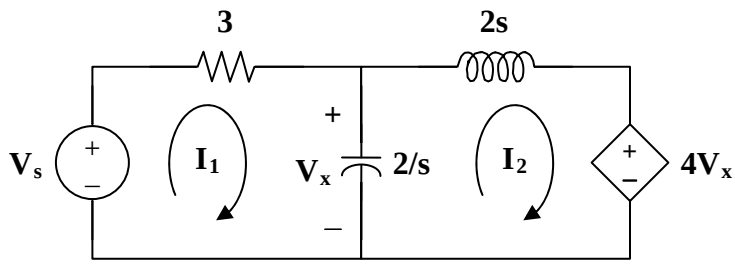

For loop 1,

$$V_s = \left(3 + \frac{2}{s}\right) I_1 - \frac{2}{s} I_2 \qquad (1)$$

For loop 2,

$$4V_x + \left(2s + \frac{2}{s}\right) I_2 - \frac{2}{s} I_1 = 0$$

But, $V_x = (I_1 - I_2)\left(\frac{2}{s}\right)$

So, $\frac{8}{s}(I_1 - I_2) + \left(2s + \frac{2}{s}\right) I_2 - \frac{2}{s} I_1 = 0$

$$0 = \frac{-6}{s} I_1 + \left(\frac{6}{s} - 2s\right) I_2 \qquad (2)$$

In matrix form, (1) and (2) become

$$\begin{bmatrix} V_s \\ 0 \end{bmatrix} = \begin{bmatrix} 3 + 2/s & -2/s \\ -6/s & 6/s - 2s \end{bmatrix} \begin{bmatrix} I_1 \\ I_2 \end{bmatrix}$$

$$\Delta = \left(3 + \frac{2}{s}\right)\left(\frac{6}{s} - 2s\right) - \left(\frac{6}{s}\right)\left(\frac{2}{s}\right)$$

$$\Delta = \frac{18}{s} - 6s - 4$$

$$\Delta_1 = \left(\frac{6}{s} - 2s\right) V_s, \qquad \Delta_2 = \frac{6}{s} V_s$$

$$I_1 = \frac{\Delta_1}{\Delta} = \frac{(6/s - 2s)}{18/s - 4 - 6s} V_s$$

www.konkur.in

$$\frac{I_1}{V_s} = \frac{3/s - s}{9/s - 2 - 3} = \frac{\mathbf{s^2 - 3}}{\mathbf{3s^2 + 2s - 9}}$$

(b) $I_2 = \dfrac{\Delta_2}{\Delta}$

$$V_x = \frac{2}{s}(I_1 - I_2) = \frac{2}{s}\left(\frac{\Delta_1 - \Delta_2}{\Delta}\right)$$

$$V_x = \frac{2/s\, V_s\, (6/s - 2s - 6/s)}{\Delta} = \frac{-4V_s}{\Delta}$$

$$\frac{I_2}{V_x} = \frac{6/s\, V_s}{-4V_s} = \frac{\mathbf{-3}}{\mathbf{2s}}$$

www.konkur.in

Chapter 16, Solution 80.

(a) Consider the following circuit.

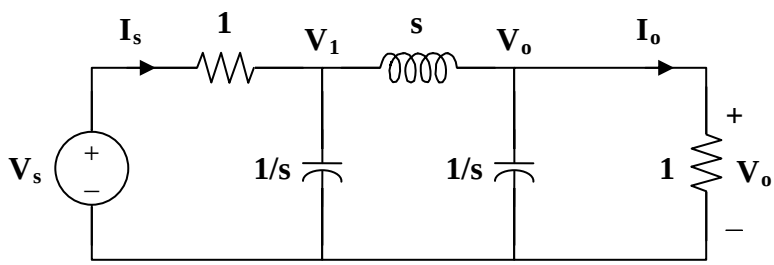

At node 1,

$$\frac{V_s - V_1}{1} = s\,V_1 + \frac{V_1 - V_o}{s}$$

$$V_s = \left(1 + s + \frac{1}{s}\right)V_1 - \frac{1}{s}V_o \qquad (1)$$

At node o,

$$\frac{V_1 - V_o}{s} = s\,V_o + V_o = (s+1)\,V_o$$

$$V_1 = (s^2 + s + 1)\,V_o \qquad (2)$$

Substituting (2) into (1)

$$V_s = (s + 1 + 1/s)(s^2 + s + 1)V_o - 1/s\,V_o$$

$$V_s = (s^3 + 2s^2 + 3s + 2)V_o$$

$$H_1(s) = \frac{V_o}{V_s} = \underline{\frac{\mathbf{1}}{\mathbf{s^3 + 2s^2 + 3s + 2}}}$$

(b) $I_s = V_s - V_1 = (s^3 + 2s^2 + 3s + 2)V_o - (s^2 + s + 1)V_o$

$I_s = (s^3 + s^2 + 2s + 1)V_o$

$$H_2(s) = \frac{V_o}{I_s} = \underline{\frac{\mathbf{1}}{\mathbf{s^3 + s^2 + 2s + 1}}}$$

(c) $I_o = \dfrac{V_o}{1}$

$$H_3(s) = \frac{I_o}{I_s} = \frac{V_o}{I_s} = H_2(s) = \underline{\frac{\mathbf{1}}{\mathbf{s^3 + s^2 + 2s + 1}}}$$

www.konkur.in

(d) $$H_4(s) = \frac{I_o}{V_s} = \frac{V_o}{V_s} = H_1(s) = \underline{\frac{\mathbf{1}}{\mathbf{s^3 + 2s^2 + 3s + 2}}}$$

www.konkur.in

Chapter 16, Solution 81.

For the op-amp circuit in Fig. 16.99, find the transfer function, $T(s) = I_o(s)/V_s(s)$. Assume all initial conditions are zero.

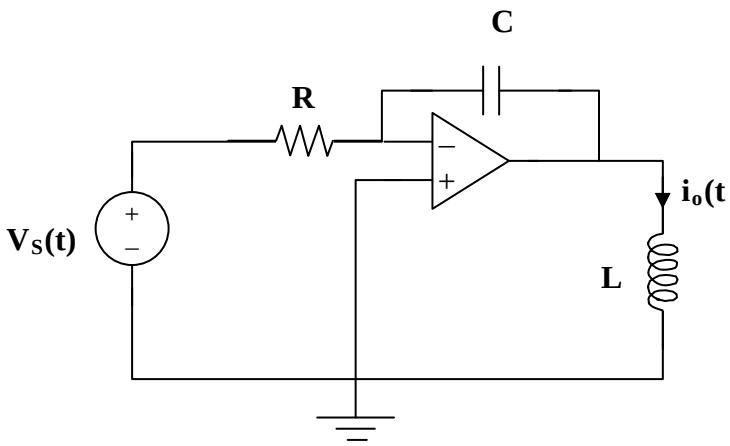

Figure 16.99
For Prob. 16.81.

Solution

Step 1. Convert the circuit into the s-domain. The write the node equations at the input to the op amp and solve for T(s).

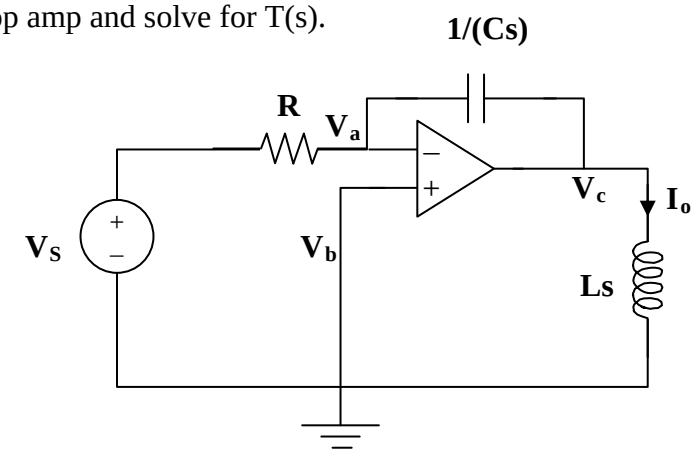

$[(V_a–V_s)/R]+[(V_a–V_c)/(1/(Cs))]+0 = 0$; $V_a = V_b = 0$ and $I_o = (V_c–0)/(Ls)$.

Step 2. $CsV_c = –V_s/R$ or $V_c = –V_s/(RCs)$ and $I_o = –V_s/(RLCs^2)$ or

$$T(s) = \mathbf{–1/(RLCs^2)}.$$

www.konkur.in

Chapter 16, Solution 82.

Consider the circuit below.

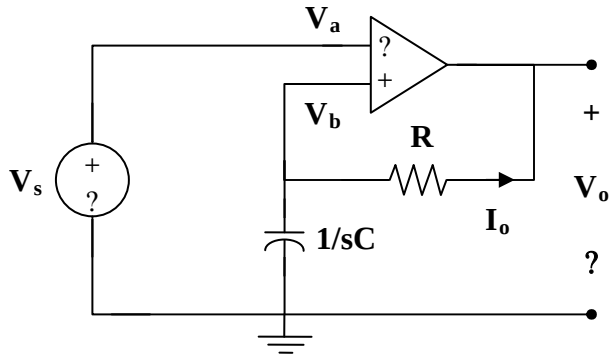

Since no current enters the op amp, I_o flows through both R and C.

$$V_o = -I_o\left(R + \frac{1}{sC}\right)$$

$$V_a = V_b = V_s = \frac{-I_o}{sC}$$

$$H(s) = \frac{V_o}{V_s} = \frac{R + 1/sC}{1/sC} = \mathbf{sRC + 1}$$

www.konkur.in

Chapter 16, Solution 83.

(a) $$H(s) = \frac{V_o}{V_s} = \frac{R}{R + sL} = \frac{R/L}{s + R/L}$$

$$h(t) = \mathbf{\frac{R}{L} e^{-Rt/L}\ u(t)}$$

(b) $$v_s(t) = u(t) \longrightarrow V_s(s) = 1/s$$

$$V_o = \frac{R/L}{s + R/L} V_s = \frac{R/L}{s(s + R/L)} = \frac{A}{s} + \frac{B}{s + R/L}$$

$$A = 1, \qquad B = -1$$

$$V_o = \frac{1}{s} - \frac{1}{s + R/L}$$

$$v_o(t) = u(t) - e^{-Rt/L}\ u(t) = \mathbf{(1 - e^{-Rt/L})u(t)}$$

www.konkur.in

Chapter 16, Solution 84.

Consider the circuit as shown below.

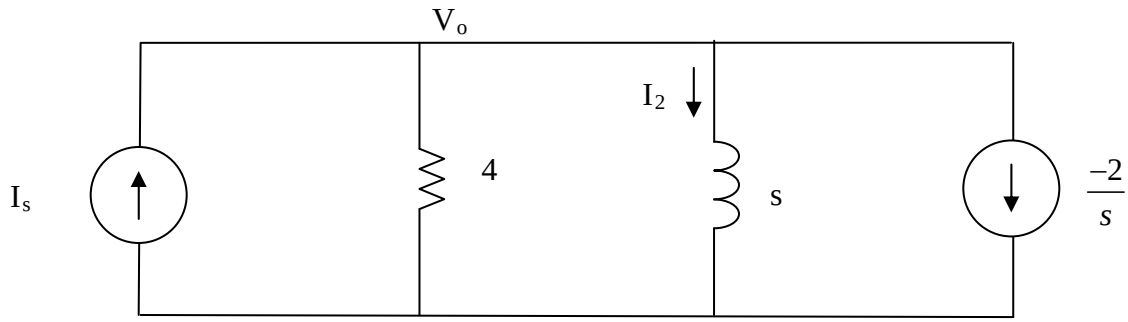

$$I_s = \frac{V_o}{4} + \frac{V_o}{s} - \frac{2}{s}$$

But $I_S = \dfrac{2}{s+1}$

$$\frac{2}{s+1} = V_o\left(\frac{1}{4} + \frac{1}{s}\right) - \frac{2}{s} \longrightarrow V_o\left(\frac{s+4}{4s}\right) = \frac{2}{s+1} + \frac{2}{s} = \frac{4s+2}{s(s+1)}$$

$$V_o = \frac{8(2s+1)}{(s+1)(s+4)}$$

$$I_L = \frac{V_o}{s} = \frac{8(2s+1)}{s(s+1)(s+4)} = \frac{A}{s} + \frac{B}{s+1} + \frac{C}{s+4}$$

$$A = \frac{8(1)}{(1)(4)} = 2, \qquad B = \frac{8(-2+1)}{(-1)(2)} = 8/3, \qquad C = \frac{8(-8+1)}{(-4)(-3)} = -14/3$$

$$I_L = \frac{V_o}{s} = \frac{2}{s} + \frac{8/3}{s+1} + \frac{-14/3}{s+4}$$

$$i_L(t) = \underline{\left(2 + \frac{8}{3}e^{-t} - \frac{14}{3}e^{-4t}\right)u(t)}$$

www.konkur.in

Chapter 16, Solution 85.

$$H(s)=\frac{s+4}{(s+1)(s+2)^2}=\frac{A}{s+1}+\frac{B}{s+2}+\frac{C}{(s+2)^2}$$

$$s+4=A(s+2)^2+B(s+1)(s+2)+C(s+1)=A(s^2+2s+4)+B(s^2+3s+2)+C(s+1)$$

We equate coefficients.

s^2 : 0=A+B or B=-A

s: 1=4A+3B+C=B+C

constant: 4=4A+2B+C =2A+C

Solving these gives A=3, B=-3, C=-2

$$H(s)=\frac{3}{s+1}-\frac{3}{s+2}-\frac{2}{(s+2)^2}$$

$$h(t)=\underline{(3e^{-t}-3e^{-2t}-2te^{-2t})u(t)}$$

www.konkur.in

Chapter 16, Solution 86.

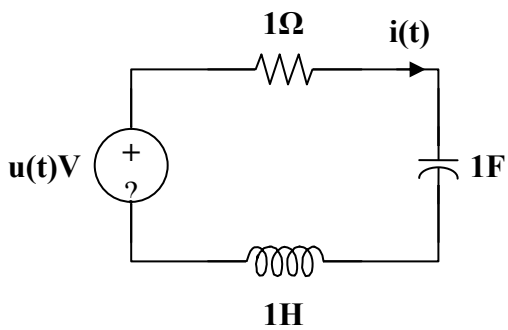

First select the inductor current i_L and the capacitor voltage v_C to be the state variables.

Applying KVL we get:

$$-u(t)+i+v_C+i'=0;\ \ i=v_C'$$

Thus,

$$\dot{v}_C = i$$
$$\dot{i} = -v_C - i + u(t)$$

Finally we get,

$$\begin{bmatrix}\dot{v}_C\\ \dot{i}\end{bmatrix}=\begin{bmatrix}0 & 1\\ -1 & -1\end{bmatrix}\begin{bmatrix}v_C\\ i\end{bmatrix}+\begin{bmatrix}0\\ 1\end{bmatrix}u(t);\ i(t)=\begin{bmatrix}0 & 1\end{bmatrix}\begin{bmatrix}v_C\\ i\end{bmatrix}+[0]u(t)$$

www.konkur.in

Chapter 16, Solution 87.

Develop the state equations for the problem you designed in Prob. 16.13.

Although there is no correct way to work this problem, this is an example based on the same kind of problem asked in the third edition.

Problem

Develop the state equations for Problem 16.13.

Chapter 16, Problem 13.

Find v_x in the circuit shown in Fig. 16.36 given $v_s = 4u(t)$ V.

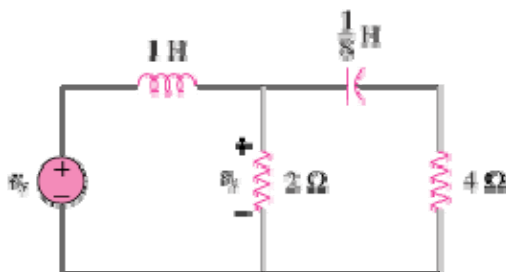

Figure 16.36

Solution

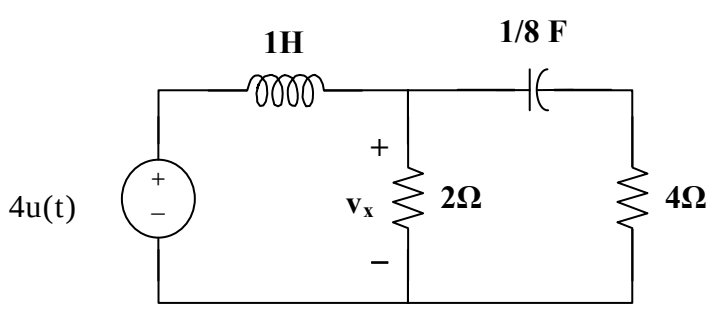

First select the inductor current i_L and the capacitor voltage v_C to be the state variables.

Applying KCL we get:

www.konkur.in

$$-i_L + \frac{v_x}{2} + \frac{\dot{v}_C}{8} = 0; \quad or \quad \dot{v}_C = 8i_L - 4v_x$$

$$\dot{i}_L = 4u(t) - v_x$$

$$v_x = v_C + 4\frac{\dot{v}_C}{8} = v_C + \frac{\dot{v}_C}{2} = v_C + 4i_L - 2v_x; \; or \; v_x = 0.3333v_C + 1.3333i_L$$

$$\dot{v}_C = 8i_L - 1.3333v_C - 5.333i_L = -1.3333v_C + 2.666i_L$$

$$\dot{i}_L = 4u(t) - 0.3333v_C - 1.3333i_L$$

Now we can write the state equations.

$$\begin{bmatrix} \dot{\mathbf{v}}_\mathbf{C} \\ \dot{\mathbf{i}}_\mathbf{L} \end{bmatrix} = \underline{\begin{bmatrix} -1.3333 & 2.666 \\ -0.3333 & -1.3333 \end{bmatrix}} \begin{bmatrix} \mathbf{v}_\mathbf{C} \\ \mathbf{i}_\mathbf{L} \end{bmatrix} + \begin{bmatrix} 0 \\ 4 \end{bmatrix} \mathbf{u(t)}; \; \mathbf{v_x} = \underline{\begin{bmatrix} 0.3333 & 1.3333 \end{bmatrix} \begin{bmatrix} \mathbf{v}_\mathbf{C} \\ \mathbf{i}_\mathbf{L} \end{bmatrix}}$$

www.konkur.in

Chapter 16, Solution 88.

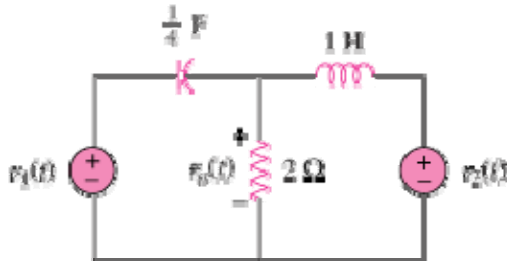

First select the inductor current i_L (current flowing left to right) and the capacitor voltage v_C (voltage positive on the left and negative on the right) to be the state variables.

Applying KCL we get:

$$-\frac{\dot{v}_C}{4}+\frac{v_o}{2}+i_L=0 \; or \; \dot{v}_C=4i_L+2v_o$$

$$\dot{i}_L=v_o-v_2$$

$$v_o=-v_C+v_1$$

$$\dot{v}_C=4i_L-2v_C+2v_1$$

$$\dot{i}_L=-v_C+v_1-v_2$$

$$\begin{bmatrix}\dot{i}_L\\ \dot{v}_C\end{bmatrix}=\underline{\begin{bmatrix}0 & -1\\ 4 & -2\end{bmatrix}\begin{bmatrix}i_L\\ v_C\end{bmatrix}+\begin{bmatrix}1 & -1\\ 2 & 0\end{bmatrix}\begin{bmatrix}v_1(t)\\ v_2(t)\end{bmatrix}};\; v_o(t)=\underline{\begin{bmatrix}0 & -1\end{bmatrix}\begin{bmatrix}i_L\\ v_C\end{bmatrix}+\begin{bmatrix}1 & 0\end{bmatrix}\begin{bmatrix}v_1(t)\\ v_2(t)\end{bmatrix}}$$

www.konkur.in

Chapter 16, Solution 89.

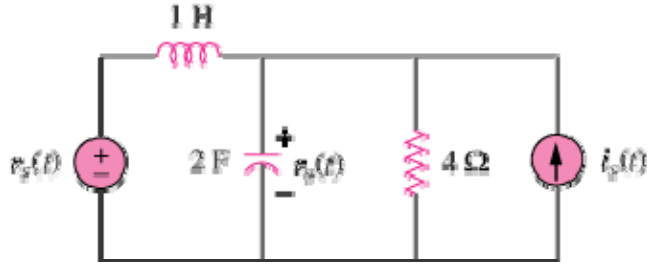

First select the inductor current i_L (left to right) and the capacitor voltage v_C to be the state variables.

Letting $v_o = v_C$ and applying KCL we get:

$$-i_L + \dot{v}_C + \frac{v_C}{4} - i_s = 0 \; or \; \dot{v}_C = -0.25v_C + i_L + i_s$$
$$\dot{i}_L = -v_C + v_s$$

Thus,

$$\begin{bmatrix} \dot{\mathbf{v}}_C \\ \dot{\mathbf{i}}_L \end{bmatrix} = \underline{\begin{bmatrix} -0.25 & 1 \\ -1 & 0 \end{bmatrix}\begin{bmatrix} \mathbf{v}_C \\ \mathbf{i}_L \end{bmatrix} + \begin{bmatrix} 0 & 1 \\ 1 & 0 \end{bmatrix}\begin{bmatrix} \mathbf{v}_s \\ \mathbf{i}_s \end{bmatrix}}; \; \mathbf{v}_o(\mathbf{t}) = \underline{\begin{bmatrix} 1 \\ 0 \end{bmatrix}\begin{bmatrix} \mathbf{v}_C \\ \mathbf{i}_L \end{bmatrix} + \begin{bmatrix} 0 & 0 \\ 0 & 0 \end{bmatrix}\begin{bmatrix} \mathbf{v}_s \\ \mathbf{i}_s \end{bmatrix}}$$

www.konkur.in

Chapter 16, Solution 90.

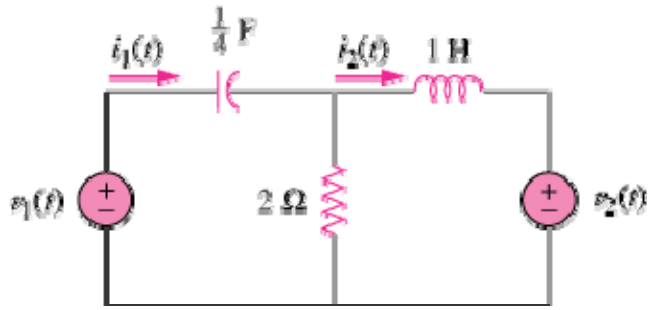

First select the inductor current i_L (left to right) and the capacitor voltage v_C (+ on the left) to be the state variables.

Letting $i_1 = \frac{\dot{v}_C}{4}$ and $i_2 = i_L$ and applying KVL we get:

Loop 1:

$$-v_1 + v_C + 2\left(\frac{\dot{v}_C}{4} - i_L\right) = 0 \; or \; \dot{v}_C = 4i_L - 2v_C + 2v_1$$

Loop 2:

$$2\left(i_L - \frac{\dot{v}_C}{4}\right) + \dot{i}_L + v_2 = 0 \; or$$

$$\dot{i}_L = -2i_L + \frac{4i_L - 2v_C + 2v_1}{2} - v_2 = -v_C + v_1 - v_2$$

$$i_1 = \frac{4i_L - 2v_C + 2v_1}{4} = i_L - 0.5v_C + 0.5v_1$$

$$\begin{bmatrix} \dot{\mathbf{i}}_L \\ \dot{\mathbf{v}}_C \end{bmatrix} = \underline{\begin{bmatrix} \mathbf{0} & \mathbf{-1} \\ \mathbf{4} & \mathbf{-2} \end{bmatrix}\begin{bmatrix} \mathbf{i}_L \\ \mathbf{v}_C \end{bmatrix} + \begin{bmatrix} \mathbf{1} & \mathbf{-1} \\ \mathbf{2} & \mathbf{0} \end{bmatrix}\begin{bmatrix} \mathbf{v}_1(\mathbf{t}) \\ \mathbf{v}_2(\mathbf{t}) \end{bmatrix}}; \begin{bmatrix} \mathbf{i}_1(\mathbf{t}) \\ \mathbf{i}_2(\mathbf{t}) \end{bmatrix} = \underline{\begin{bmatrix} \mathbf{1} & \mathbf{-0.5} \\ \mathbf{1} & \mathbf{0} \end{bmatrix}\begin{bmatrix} \mathbf{i}_L \\ \mathbf{v}_C \end{bmatrix} + \begin{bmatrix} \mathbf{0.5} & \mathbf{0} \\ \mathbf{0} & \mathbf{0} \end{bmatrix}\begin{bmatrix} \mathbf{v}_1(\mathbf{t}) \\ \mathbf{v}_2(\mathbf{t}) \end{bmatrix}}$$

www.konkur.in

Chapter 16, Solution 91.

Let $x_1 = y(t)$. Thus, $\dot{x}_1 = \dot{y} = x_2$ *and* $\dot{x}_2 = \ddot{y} = -3x_1 - 4x_2 + z(t)$

This gives our state equations.

$$\begin{bmatrix} \dot{x}_1 \\ \dot{x}_2 \end{bmatrix} = \underline{\begin{bmatrix} 0 & 1 \\ -3 & -4 \end{bmatrix}\begin{bmatrix} x_1 \\ x_2 \end{bmatrix} + \begin{bmatrix} 0 \\ 1 \end{bmatrix} z(t);} \quad y(t) = \underline{\begin{bmatrix} 1 & 0 \end{bmatrix}\begin{bmatrix} x_1 \\ x_2 \end{bmatrix} + [0]z(t)}$$

www.konkur.in

Chapter 16, Solution 92.

$Let\ x_1 = y(t)\ and\ \ x_2 = \dot{x}_1 - z = \dot{y} - z\ \ or\ \ \dot{y} = x_2 + z$

Thus,

$$\dot{x}_2 = \ddot{y} - \dot{z} = -9x_1 - 7(x_2 + z) + \dot{z} + 2z - \dot{z} = -9x_1 - 7x_2 - 5z$$

This now leads to our state equations,

$$\begin{bmatrix} \dot{\mathbf{x}}_1 \\ \dot{\mathbf{x}}_2 \end{bmatrix} = \underline{\begin{bmatrix} \mathbf{0} & \mathbf{1} \\ \mathbf{-9} & \mathbf{-7} \end{bmatrix}\begin{bmatrix} \mathbf{x}_1 \\ \mathbf{x}_2 \end{bmatrix} + \begin{bmatrix} \mathbf{1} \\ \mathbf{-5} \end{bmatrix}\mathbf{z(t)}};\ \ \mathbf{y(t)} = \underline{\begin{bmatrix} \mathbf{1} & \mathbf{0} \end{bmatrix}\begin{bmatrix} \mathbf{x}_1 \\ \mathbf{x}_2 \end{bmatrix} + \begin{bmatrix} \mathbf{0} \end{bmatrix}\mathbf{z(t)}}$$

www.konkur.in

Chapter 16, Solution 93.

Let $x_1 = y(t)$, $x_2 = \dot{x}_1$, *and* $x_3 = \dot{x}_2$.

Thus,

$$\ddot{x}_3 = -6x_1 - 11x_2 - 6x_3 + z(t)$$

We can now write our state equations.

$$\begin{bmatrix} \dot{x}_1 \\ \dot{x}_2 \\ \dot{x}_3 \end{bmatrix} = \underline{\begin{bmatrix} 0 & 1 & 0 \\ 0 & 0 & 1 \\ -6 & -11 & -6 \end{bmatrix}\begin{bmatrix} x_1 \\ x_2 \\ x_3 \end{bmatrix} + \begin{bmatrix} 0 \\ 0 \\ 1 \end{bmatrix} z(t);} \quad \underline{y(t) = \begin{bmatrix} 1 & 0 & 0 \end{bmatrix}\begin{bmatrix} x_1 \\ x_2 \\ x_3 \end{bmatrix} + [0]z(t)}$$

www.konkur.in

Chapter 16, Solution 94.

We transform the state equations into the s-domain and solve using Laplace transforms.

$$sX(s) - x(0) = AX(s) + B\left(\frac{1}{s}\right)$$

Assume the initial conditions are zero.

$$(sI - A)X(s) = B\left(\frac{1}{s}\right)$$

$$X(s) = \begin{bmatrix} s+4 & -4 \\ 2 & s \end{bmatrix}^{-1} \begin{bmatrix} 0 \\ 2 \end{bmatrix}\left(\frac{1}{s}\right) = \frac{1}{s^2+4s+8}\begin{bmatrix} s & 4 \\ 2 & s+4 \end{bmatrix}\begin{bmatrix} 0 \\ (2/s) \end{bmatrix}$$

$$Y(s) = X_1(s) = \frac{8}{s(s^2+4s+8)} = \frac{1}{s} + \frac{-s-4}{s^2+4s+8}$$

$$= \frac{1}{s} + \frac{-s-4}{(s+2)^2+2^2} = \frac{1}{s} + \frac{-(s+2)}{(s+2)^2+2^2} + \frac{-2}{(s+2)^2+2^2}$$

$$\mathbf{y(t) = \left(1 - e^{-2t}\left(\cos 2t + \sin 2t\right)\right)u(t)}$$

www.konkur.in

Chapter 16, Solution 95.

Assume that the initial conditions are zero. Using Laplace transforms we get,

$$X(s) = \begin{bmatrix} s+2 & 1 \\ -2 & s+4 \end{bmatrix}^{-1} \begin{bmatrix} 1 & 1 \\ 4 & 0 \end{bmatrix} \begin{bmatrix} 1/s \\ 2/s \end{bmatrix} = \frac{1}{s^2+6s+10} \begin{bmatrix} s+4 & -1 \\ 2 & s+2 \end{bmatrix} \begin{bmatrix} 3/s \\ 4/s \end{bmatrix}$$

$$X_1 = \frac{3s+8}{s((s+3)^2+1^2)} = \frac{0.8}{s} + \frac{-0.8s-1.8}{(s+3)^2+1^2}$$

$$= \frac{0.8}{s} - 0.8\frac{s+3}{(s+3)^2+1^2} + .6\frac{1}{(s+3)^2+1^2}$$

$$x_1(t) = (0.8 - 0.8e^{-3t}\cos t + 0.6e^{-3t}\sin t)u(t)$$

$$X_2 = \frac{4s+14}{s((s+3)^2+1^2} = \frac{1.4}{s} + \frac{-1.4s-4.4}{(s+3)^2+1^2}$$

$$= \frac{1.4}{s} - 1.4\frac{s+3}{(s+3)^2+1^2} - 0.2\frac{1}{(s+3)^2+1^2}$$

$$x_2(t) = (1.4 - 1.4e^{-3t}\cos t - 0.2e^{-3t}\sin t)u(t)$$

$$\mathbf{y_1(t) = -2x_1(t) - 2x_2(t) + 2u(t)}$$
$$\mathbf{= \underline{(-2.4 + 4.4e^{-3t}\cos t - 0.8e^{-3t}\sin t)u(t)}}$$

$$\mathbf{y_2(t) = x_1(t) - 2u(t) = \underline{(-1.2 - 0.8e^{-3t}\cos t + 0.6e^{-3t}\sin t)u(t)}}$$

$[-2.4 + 4.4e^{-3t}\cos(t) - 0.8e^{-3t}\sin(t)]u(t)$, $[-1.2 - 0.8e^{-3t}\cos(t) + 0.6e^{-3t}\sin(t)]u(t)$

www.konkur.in

Chapter 16, Solution 96.

If V_o is the voltage across R, applying KCL at the non-reference node gives

$$I_s = \frac{V_o}{R} + sC\,V_o + \frac{V_o}{sL} = \left(\frac{1}{R} + sC + \frac{1}{sL}\right)V_o$$

$$V_o = \frac{I_s}{\frac{1}{R} + sC + \frac{1}{sL}} = \frac{sRL\,I_s}{sL + R + s^2RLC}$$

$$I_o = \frac{V_o}{R} = \frac{sL\,I_s}{s^2RLC + sL + R}$$

$$H(s) = \frac{I_o}{I_s} = \frac{sL}{s^2RLC + sL + R} = \frac{s/RC}{s^2 + s/RC + 1/LC}$$

The roots

$$s_{1,2} = \frac{-1}{2RC} \pm \sqrt{\frac{1}{(2RC)^2} - \frac{1}{LC}}$$

both lie in the left half plane since R, L, and C are positive quantities.

Thus, **the circuit is stable**.

www.konkur.in

Chapter 16, Solution 97.

(a) $H_1(s) = \dfrac{3}{s+1}$, $\qquad H_2(s) = \dfrac{1}{s+4}$

$$H(s) = H_1(s)H_2(s) = \frac{3}{(s+1)(s+4)}$$

$$h(t) = L^{-1}\left[H(s)\right] = L^{-1}\left[\frac{A}{s+1} + \frac{B}{s+4}\right]$$

$A = 1$, $\qquad B = -1$

$$h(t) = \mathbf{(e^{-t} - e^{-4t})u(t)}$$

(b) Since the poles of H(s) all lie in the left half s-plane, **the system is stable**.

www.konkur.in

Chapter 16, Solution 98.

Let V_{o1} be the voltage at the output of the first op amp.

$$\frac{V_{o1}}{V_s} = \frac{-1/sC}{R} = \frac{-1}{sRC}, \qquad \frac{V_o}{V_{o1}} = \frac{-1}{sRC}$$

$$H(s) = \frac{V_o}{V_s} = \frac{1}{s^2R^2C^2}$$

$$h(t) = \frac{t}{R^2C^2}$$

$\lim_{t\to\infty} h(t) = \infty$, i.e. the output is unbounded.

Hence, **the circuit is unstable**.

www.konkur.in

Chapter 16, Solution 99.

$$sL \parallel \frac{1}{sC} = \frac{sL \cdot \frac{1}{sC}}{sL + \frac{1}{sC}} = \frac{sL}{1 + s^2LC}$$

$$\frac{V_2}{V_1} = \frac{\frac{sL}{1 + s^2LC}}{R + \frac{sL}{1 + s^2LC}} = \frac{sL}{s^2RLC + sL + R}$$

$$\frac{V_2}{V_1} = \frac{s \cdot \frac{1}{RC}}{s^2 + s \cdot \frac{1}{RC} + \frac{1}{LC}}$$

Comparing this with the given transfer function,

$$2 = \frac{1}{RC}, \qquad 6 = \frac{1}{LC}$$

If $R = 1\,k\Omega$, $\quad C = \frac{1}{2R} =$ **500 μF**

$$L = \frac{1}{6C} = \textbf{333.3 H}$$

Chapter 16, Solution 100.

The circuit is transformed in the s-domain as shown below.

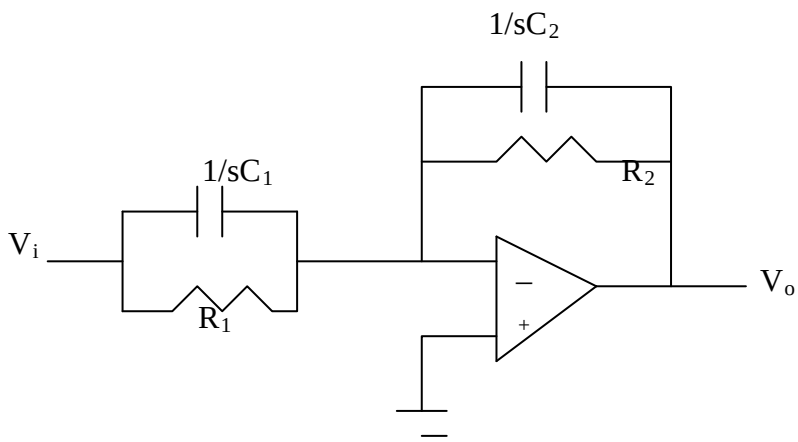

Let $Z_1 = R_1 // \dfrac{1}{sC_1} = \dfrac{R_1 \dfrac{1}{sC_1}}{R_1 + \dfrac{1}{sC_1}} = \dfrac{R_1}{1 + sR_1C_1}$

$$Z_2 = R_2 // \frac{1}{sC_2} = \frac{R_2 \dfrac{1}{sC_2}}{R_2 + \dfrac{1}{sC_2}} = \frac{R_2}{1 + sR_2C_2}$$

This is an inverting amplifier.

$$H(s) = V_o / V_i = -\frac{Z_2}{Z_1} = \frac{-\dfrac{R_2}{1+sR_2C_2}}{\dfrac{R_1}{1+sR_1C_1}} = -\frac{R_2}{R_1}\frac{R_1C_1}{R_2C_2}\left[\frac{s+\dfrac{1}{R_1C_1}}{s+\dfrac{1}{R_2C_2}}\right] = \frac{-C_1}{C_2}\left[\frac{s+\dfrac{1}{R_1C_1}}{s+\dfrac{1}{R_2C_2}}\right]$$

Comparing this with

$$H(s) = -\frac{(s+1000)}{2(s+4000)}$$

we obtain:

$$\frac{C_1}{C_2} = 1/2 \quad \longrightarrow \quad C_2 = 2C_1 = \underline{20\mu F}$$

$$\frac{1}{R_1C_1} = 1000 \quad \longrightarrow \quad R_1 = \frac{1}{1000C_1} = \frac{1}{10^3 x 10 x 10^{-6}} = \underline{100\Omega}$$

$$\frac{1}{R_2C_2} = 4000 \quad \longrightarrow \quad R_2 = \frac{1}{4000C_2} = \frac{1}{4x10^3 x 20 x 10^{-6}} = 1 \quad \underline{\mathbf{12.5\Omega}}$$

www.konkur.in

Chapter 16, Solution 101.

We apply KCL at the noninverting terminal at the op amp.

$$(V_s - 0)\,Y_3 = (0 - V_o)(Y_1 - Y_2)$$

$$Y_3\,V_s = -(Y_1 + Y_2)V_o$$

$$\frac{V_o}{V_s} = \frac{-Y_3}{Y_1 + Y_2}$$

Let $\quad Y_1 = sC_1, \qquad Y_2 = 1/R_1\,, \qquad Y_3 = sC_2$

$$\frac{V_o}{V_s} = \frac{-sC_2}{sC_1 + 1/R_1} = \frac{-sC_2/C_1}{s + 1/R_1C_1}$$

Comparing this with the given transfer function,

$$\frac{C_2}{C_1} = 1, \qquad \frac{1}{R_1C_1} = 10$$

If $R_1 = 1\,k\Omega$,

$$C_1 = C_2 = \frac{1}{10^4} = \mathbf{100\ \mu F}$$

www.konkur.in

Chapter 16, Solution 102.

Consider the circuit shown below. We notice that $V_3 = V_o$ and $V_2 = V_3 = V_o$.

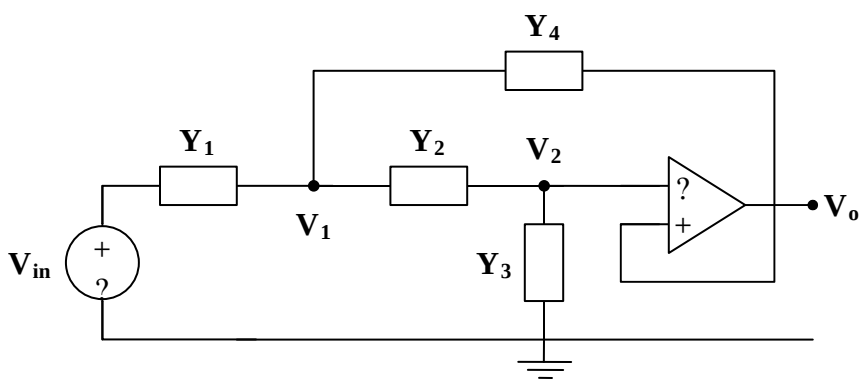

At node 1,

$$(V_{in} - V_1)Y_1 = (V_1 - V_o)Y_2 + (V_1 - V_o)Y_4$$

$$V_{in}Y_1 = V_1(Y_1 + Y_2 + Y_4) - V_o(Y_2 + Y_4) \qquad (1)$$

At node 2,

$$(V_1 - V_o)Y_2 = (V_o - 0)Y_3$$

$$V_1 Y_2 = (Y_2 + Y_3)V_o$$

$$V_1 = \frac{Y_2 + Y_3}{Y_2}V_o \qquad (2)$$

Substituting (2) into (1),

$$V_{in}Y_1 = \frac{Y_2 + Y_3}{Y_2}\cdot(Y_1 + Y_2 + Y_4)V_o - V_o(Y_2 + Y_4)$$

$$V_{in}Y_1Y_2 = V_o(Y_1Y_2 + Y_2^2 + Y_2Y_4 + Y_1Y_3 + Y_2Y_3 + Y_3Y_4 - Y_2^2 - Y_2Y_4)$$

$$\frac{V_o}{V_{in}} = \frac{Y_1Y_2}{Y_1Y_2 + Y_1Y_3 + Y_2Y_3 + Y_3Y_4}$$

Y_1 and Y_2 must be resistive, while Y_3 and Y_4 must be capacitive.

Let $\quad Y_1 = \dfrac{1}{R_1}, \qquad Y_2 = \dfrac{1}{R_2}, \qquad Y_3 = sC_1, \qquad Y_4 = sC_2$

$$\frac{V_o}{V_{in}} = \frac{\dfrac{1}{R_1R_2}}{\dfrac{1}{R_1R_2} + \dfrac{sC_1}{R_1} + \dfrac{sC_1}{R_2} + s^2C_1C_2}$$

www.konkur.in

$$\frac{V_o}{V_{in}} = \frac{\dfrac{1}{R_1R_2C_1C_2}}{s^2 + s\cdot\left(\dfrac{R_1+R_2}{R_1R_2C_2}\right) + \dfrac{1}{R_1R_2C_1C_2}}$$

Choose $R_1 = 1\,k\Omega$, then

$$\frac{1}{R_1R_2C_1C_2} = 10^6 \qquad \text{and} \qquad \frac{R_1+R_2}{R_1R_2C_2} = 100$$

We have three equations and four unknowns. Thus, there is a family of solutions. One such solution is

$$R_2 = \mathbf{1\,k\Omega}, \quad C_1 = \mathbf{50\,nF}, \quad C_2 = \mathbf{20\,\mu F}$$

www.konkur.in

Chapter 16, Solution 103.

Using the result of Practice Problem 16.14,

$$\frac{V_o}{V_i} = \frac{-Y_1 Y_2}{Y_2 Y_3 + Y_4 (Y_1 + Y_2 + Y_3)}$$

When $Y_1 = sC_1, \qquad C_1 = 0.5\ \mu F$

$Y_2 = \dfrac{1}{R_1}, \qquad R_1 = 10\ k\Omega$

$Y_3 = Y_2, \qquad Y_4 = sC_2, \qquad C_2 = 1\ \mu F$

$$\frac{V_o}{V_i} = \frac{-sC_1/R_1}{1/R_1^2 + sC_2(sC_1 + 2/R_1)} = \frac{-sC_1R_1}{1 + sC_2R_1(2 + sC_1R_1)}$$

$$\frac{V_o}{V_i} = \frac{-sC_1R_1}{s^2C_1C_2R_1^2 + s \cdot 2C_2R_1 + 1}$$

$$\frac{V_o}{V_i} = \frac{-s(0.5\times10^{-6})(10\times10^3)}{s^2(0.5\times10^{-6})(1\times10^{-6})(10\times10^3)^2 + s(2)(1\times10^{-6})(10\times10^3) + 1}$$

$$\frac{V_o}{V_i} = \frac{-100s}{s^2 + 400s + 2\times10^4}$$

Therefore,

$$a = \mathbf{-100}, \qquad b = \mathbf{400}, \qquad c = \mathbf{2\times10^4}$$

www.konkur.in

Chapter 16, Solution 104.

(a) Let $Y(s) = \dfrac{K(s+1)}{s+3}$

$$Y(\infty) = \lim_{s\to\infty} \frac{K(s+1)}{s+3} = \lim_{s\to\infty} \frac{K(1+1/s)}{1+3/s} = K$$

i.e. $0.25 = K$.

Hence, $Y(s) = \dfrac{\mathbf{s+1}}{\mathbf{4(s+3)}}$

(b) Consider the circuit shown below.

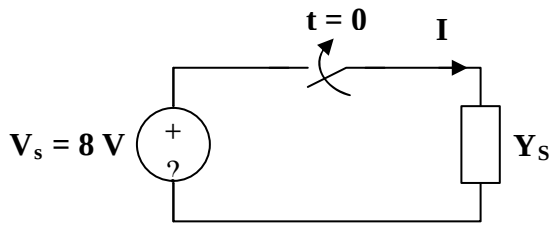

$V_s = 8u(t) \longrightarrow V_s = 8/s$

$$I = \frac{V_s}{Z} = Y(s)V_s(s) = \frac{8}{4s}\cdot\frac{s+1}{s+3} = \frac{2(s+1)}{s(s+3)}$$

$$I = \frac{A}{s} + \frac{B}{s+3}$$

$A = 2/3$, $B = 2(-3+1)/(-3) = 4/3$

$$i(t) = \mathbf{\frac{1}{3}\left[2 + 4e^{-3t}\right]u(t)\ A}$$

www.konkur.in

Chapter 16, Solution 105.

The gyrator is equivalent to two cascaded inverting amplifiers. Let V_1 be the voltage at the output of the first op amp.

$$V_1 = \frac{-R}{R} V_i = -V_i$$

$$V_o = \frac{-1/sC}{R} V_1 = \frac{1}{sCR} V_i$$

$$I_o = \frac{V_o}{R} = \frac{V_o}{sR^2C}$$

$$\frac{V_o}{I_o} = sR^2C$$

$$\mathbf{\frac{V_o}{I_o} = sL,} \quad \textbf{when } \mathbf{L = R^2C}\text{, so } \textbf{if you let } \mathbf{L = R^2C} \textbf{ then } \mathbf{V_o/I_o = sL}.$$

www.konkur.in

Chapter 17, Solution 1.

(a) This is **periodic** with $\omega = \pi$ which leads to $T = 2\pi/\omega = \mathbf{2}$.

(b) y(t) is **not periodic** although sin t and 4 cos 2πt are independently periodic.

(c) Since $\sin A \cos B = 0.5[\sin(A + B) + \sin(A - B)]$,
$g(t) = \sin 3t \cos 4t = 0.5[\sin 7t + \sin(-t)] = -0.5 \sin t + 0.5 \sin 7t$
which is harmonic or **periodic** with the fundamental frequency

$$\omega = 1 \text{ or } T = 2\pi/\omega = \mathbf{2\pi.}$$

(d) $h(t) = \cos^2 t = 0.5(1 + \cos 2t)$. Since the sum of a periodic function and a constant is also **periodic**, h(t) is periodic. $\omega = 2$ or $T = 2\pi/\omega = \boldsymbol{\pi}$.

(e) The frequency ratio $0.6|0.4 = 1.5$ makes z(t) **periodic**.

$$\omega = 0.2\pi \text{ or } T = 2\pi/\omega = \mathbf{10}.$$

(f) $p(t) = 10$ is **not periodic**.

(g) g(t) is **not periodic**.

www.konkur.in

Chapter 17, Solution 2.

The function f(t) has a DC offset and is even. We use the following MATLAB code to plot f(t). The plot is shown below. If more terms are taken, the curve is clearly indicating a triangular wave shape which is easily represented with just the DC component and three, cosinusoidal terms of the expansion.

```
for n=1:100
   tn(n)=n/10;
   t=n/10;
   y1=cos(t);
   y2=(1/9)*cos(3*t);
   y3=(1/25)*cos(5*t);
   factor=4/(pi*pi);
   y(n)=0.5- factor*(y1+y2+y3);
end
plot(tn,y)
```

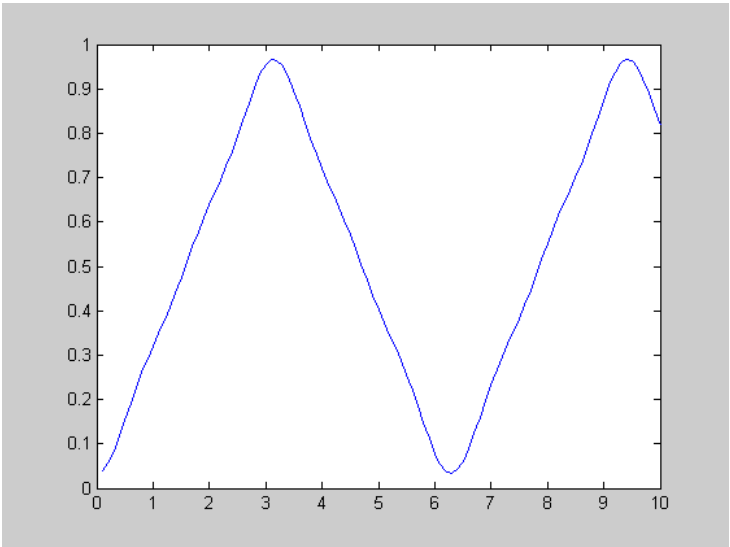

www.konkur.in

Chapter 17, Solution 3.

$T = 4, \ \omega_o = 2\pi/T = \pi/2$

$$g(t) = \begin{cases} 5, & 0 < t < 1 \\ 10, & 1 < t < 2 \\ 0, & 2 < t < 4 \end{cases}$$

$$a_o = (1/T)\int_0^T g(t)dt = 0.25[\int_0^1 5dt + \int_1^2 10dt] = \mathbf{3.75}$$

$$a_n = (2/T)\int_0^T g(t)\cos(n\omega_o t)dt = (2/4)[\int_0^1 5\cos(\frac{n\pi}{2}t)dt + \int_1^2 10\cos(\frac{n\pi}{2}t)dt]$$

$$= 0.5[5\frac{2}{n\pi}\sin\frac{n\pi}{2}t\Big|_0^1 + 10\frac{2}{n\pi}\sin\frac{n\pi}{2}t\Big|_1^2] = (-1/(n\pi))5\sin(n\pi/2)$$

$$a_n = \begin{cases} \mathbf{(5/(n\pi))(-1)^{(n+1)/2}}, & \mathbf{n = odd} \\ \mathbf{0}, & \mathbf{n = even} \end{cases}$$

$$b_n = (2/T)\int_0^T g(t)\sin(n\omega_o t)dt = (2/4)[\int_0^1 5\sin(\frac{n\pi}{2}t)dt + \int_1^2 10\sin(\frac{n\pi}{2}t)dt]$$

$$= 0.5[\frac{-2x5}{n\pi}\cos\frac{n\pi}{2}t\Big|_0^1 - \frac{2x10}{n\pi}\cos\frac{n\pi}{2}t\Big|_1^2] = \mathbf{(5/(n\pi))[3 - 2\cos n\pi + \cos(n\pi/2)]}$$

n	**a_n**	**b_n**	**A_n**	**phase**
1	**–1.59**	**7.95**	**8.11**	**–101.31**
2	**0**	**0**	**0**	**0**
3	**0.53**	**2.65**	**2.70**	**–78.69**
4	**0**	**0.80**	**0.80**	**–90**
5	**–0.32**	**1.59**	**1.62**	**–101.31**
6	**0**	**0**	**0**	**0**
7	**0.23**	**1.15**	**1.17**	**–78.69**
8	**0**	**0.40**	**0.40**	**–90**

www.konkur.in

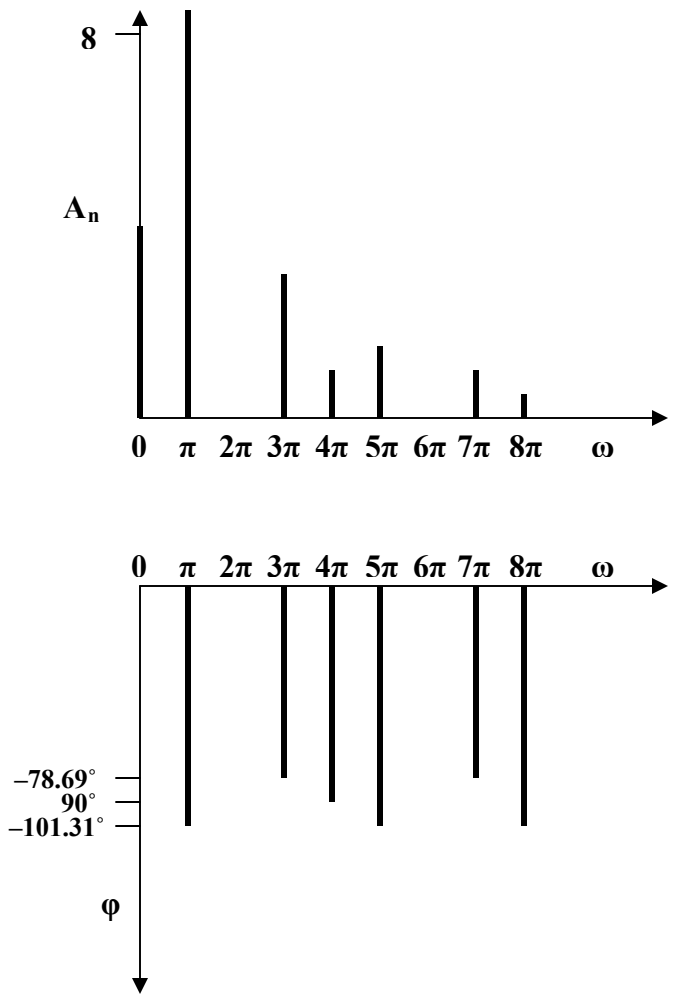

Figure D. 35
For Prob. 17.3.

www.konkur.in

Chapter 17, Solution 4.

$f(t) = 10 - 5t, \quad 0 < t < 2, \quad T = 2, \quad \omega_o = 2\pi/T = \pi$

$$a_o = (1/T)\int_0^T f(t)dt = (1/2)\int_0^2 (10 - 5t)dt = 0.5[10t - (5t^2/2)]\Big|_0^2 = \mathbf{5}$$

$$a_n = (2/T)\int_0^T f(t)\cos(n\omega_o t)dt = (2/2)\int_0^2 (10 - 5t)\cos(n\pi t)dt$$

$$= \int_0^2 (10)\cos(n\pi t)dt - \int_0^2 (5t)\cos(n\pi t)dt$$

$$= \frac{-5}{n^2\pi^2}\cos n\pi t\Big|_0^2 + \frac{5t}{n\pi}\sin n\pi t\Big|_0^2 = [-5/(n^2\pi^2)](\cos 2n\pi - 1) = \mathbf{0}$$

$$b_n = (2/2)\int_0^2 (10 - 5t)\sin(n\pi t)dt$$

$$= \int_0^2 (10)\sin(n\pi t)dt - \int_0^2 (5t)\sin(n\pi t)dt$$

$$= \frac{-5}{n^2\pi^2}\sin n\pi t\Big|_0^2 + \frac{5t}{n\pi}\cos n\pi t\Big|_0^2 = 0 + [10/(n\pi)](\cos 2n\pi) = \mathbf{10/(n\pi)}$$

Hence

$$f(t) = \mathbf{5 + \frac{10}{\pi}\sum_{n=1}^{\infty}\frac{1}{n}\sin(n\pi t)}.$$

www.konkur.in

Chapter 17, Solution 5.

$$T = 2\pi, \qquad \omega = 2\pi / T = 1$$

$$a_o = \frac{1}{T}\int_0^T z(t)dt = \frac{1}{2\pi}[2x\pi - 4x\pi] = -1$$

$$a_n = \frac{2}{T}\int_0^T z(t)\cos(n\omega_o)dt = \frac{1}{\pi}\int_0^{\pi} 2\cos(nt)dt - \frac{1}{\pi}\int_{\pi}^{2\pi} 4\cos(nt)dt = \frac{2}{n\pi}\sin(nt)\Big|_0^{\pi} - \frac{4}{n\pi}\sin(nt)\Big|_{\pi}^{2\pi} = 0$$

$$b_n = \frac{2}{T}\int_0^T z(t)\sin(n\omega_o)dt = \frac{1}{\pi}\int_0^{\pi} 2\sin(nt)dt - \frac{1}{\pi}\int_{\pi}^{2\pi} 4\sin(nt)dt = -\frac{2}{n\pi}\cos(nt)\Big|_0^{\pi} + \frac{4}{n\pi}\cos(nt)\Big|_{\pi}^{2\pi}$$

$$= \begin{cases} \dfrac{12}{n\pi}, n = odd \\ 0, \ n = even \end{cases}$$

Thus,

$$\mathbf{z(t) = -1 + \sum_{\substack{n=1 \\ n=odd}}^{\infty} \frac{12}{n\pi}\sin(nt)}$$

www.konkur.in

Chapter 17, Solution 6.

T=2π, ω_o=2π/T = 1

$$a_o = \frac{1}{T}\int_0^T f(t)dt = \frac{1}{2\pi}\left[\int_0^{\pi} 5dt + \int_{\pi}^{2\pi} 10dt\right] = \frac{1}{2\pi}(5\pi + 10\pi) = 7.5$$

$$a_n = \frac{2}{T}\int_0^T f(t)\cos n\omega_o t dt = \frac{2}{2\pi}\left[\int_0^{\pi} 5\cos ntdt + \int_{\pi}^{2\pi} 10\cos ntdt\right] = 0$$

$$b_n = \frac{2}{T}\int_0^T f(t)\sin n\omega_o t dt = \frac{2}{2\pi}\left[\int_0^{\pi} 5\sin ntdt + \int_{\pi}^{2\pi} 10\sin ntdt\right] = \frac{1}{\pi}\left[-\frac{1}{n}\cos nt\Big|_0^{\pi} - \frac{1}{n}\cos nt\Big|_{\pi}^{2\pi}\right]$$

$$= \frac{5}{n\pi}\left[\cos \pi n - 1\right] = \begin{cases} -\dfrac{10}{n\pi}, & n = odd \\ 0, & n = even \end{cases}$$

Thus,

$$\underline{f(t) = 7.5 - \sum_{n=odd}^{\infty} \frac{10}{n\pi}\sin nt}$$

www.konkur.in

Chapter 17, Solution 7.

$T = 3, \quad \omega_o = 2\pi / T = 2\pi / 3$

$$a_o = \frac{1}{T}\int_0^T f(t)dt = \frac{1}{3}\left[\int_0^2 2dt + \int_2^3 (-1)dt\right] = \frac{1}{3}(4-1) = 1$$

$$a_n = \frac{2}{T}\int_0^T f(t)\cos\frac{2n\pi t}{3}dt = \frac{2}{3}\left[\int_0^2 2\cos\frac{2n\pi t}{3}dt + \int_2^3 (-1)\cos\frac{2n\pi t}{3}dt\right]$$

$$= \frac{2}{3}\left[2\frac{3}{2n\pi}\sin\frac{2n\pi t}{3}\Big|_0^2 - 1\frac{3}{2n\pi}\sin\frac{2n\pi t}{3}\Big|_2^3\right] = \frac{3}{n\pi}\sin\frac{4n\pi}{3}$$

$$b_n = \frac{2}{T}\int_0^T f(t)\sin\frac{2n\pi t}{3}dt = \frac{2}{3}\left[\int_0^2 2\sin\frac{2n\pi t}{3}dt + \int_2^3 (-1)\sin\frac{2n\pi t}{3}dt\right]$$

$$= \frac{2}{3}\left[-2x\frac{3}{2n\pi}\cos\frac{2n\pi t}{3}\Big|_0^2 + \frac{3}{2n\pi}\cos\frac{2n\pi t}{3}\Big|_2^3\right] = \frac{3}{n\pi}(1 - 2\cos\frac{4n\pi}{3})$$

$$= \frac{1}{n\pi}\left(2 - 3\cos\frac{4n\pi}{3} + 1\right) = \frac{3}{n\pi}\left(1 - \cos\frac{4n\pi}{3}\right)$$

Hence,

$$f(t) = \mathbf{1 + \sum_{n=0}^{\infty}\left[\frac{3}{n\pi}\sin\frac{4n\pi}{3}\cos\frac{2n\pi t}{3} + \frac{3}{n\pi}\left(1 - \cos\frac{4n\pi}{3}\right)\sin\frac{2n\pi t}{3}\right]}$$

We can now use MATLAB to check our answer,

```
>> t=0:.01:3;
>> f=1*ones(size(t));
>> for n=1:1:99,
f=f+(3/(n*pi))*sin(4*n*pi/3)*cos(2*n*pi*t/3)+(3/(n*pi))*(1-
cos(4*n*pi/3))*sin(2*n*pi*t/3);
end
>> plot(t,f)
```

www.konkur.in

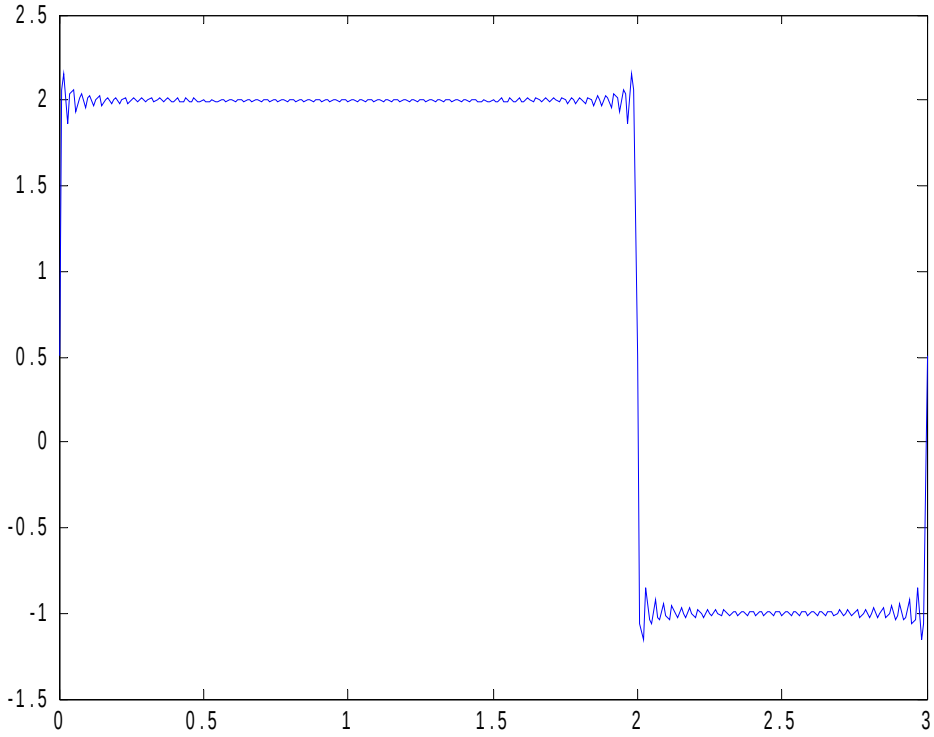

Clearly we have nearly the same figure we started with!!

www.konkur.in

Chapter 17, Solution 8.

Using Fig. 17.51, design a problem to help other students to better understand how to determine the exponential Fourier Series from a periodic wave shape.

Although there are many ways to solve this problem, this is an example based on the same kind of problem asked in the third edition.

Problem

Obtain the exponential Fourier series of the function in Fig. 17.51.

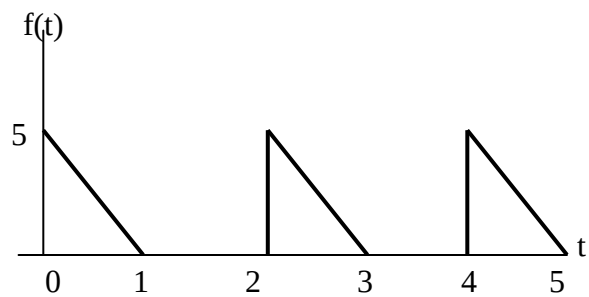

Figure 17.51 For Prob. 17.8.

Solution

$T = 2, \quad \omega_o = 2\pi / T = \pi$

$$f(t) = \begin{cases} 5(1-t), & 0 < t < 1 \\ 0, & 1 < t < 2 \end{cases}$$

$$c_n = \frac{1}{T}\int_0^T f(t)e^{-jn\omega_o t}dt = \frac{1}{2}\int_0^1 5(1-t)e^{-jn\pi t}dt$$

$$= \frac{5}{2}\int_0^1 e^{-jn\pi t}dt - \frac{5}{2}\int_0^1 te^{-jn\pi t}dt = \frac{5}{2}\frac{e^{-jn\pi t}}{-jn\pi}\Bigg|_0^1 - \frac{5}{2}\frac{e^{-jn\pi t}}{(-jn\pi)^2}(-jn\pi t - 1)\Bigg|_0^1$$

$$= \frac{5}{2}\frac{\left[e^{-jn\pi} - 1\right]}{-jn\pi} - \frac{5}{2}\frac{e^{-jn\pi}}{-n^2\pi^2}(-jn\pi - 1) + \frac{5}{2}\frac{(-1)}{-n^2\pi^2}$$

But $e^{-jn\pi} = \cos\pi n - j\sin n\pi = \cos n\pi + 0 = (-1)^n$

$$c_n = \frac{2.5[1-(-1)^n]}{jn\pi} - \frac{2.5(-1)^n[1+jn\pi]}{n^2\pi^2} + \frac{2.5}{n^2\pi^2}$$

www.konkur.in

Chapter 17, Solution 9.

f(t) is an even function, $b_n=0$.

$$T = 8, \qquad \omega = 2\pi / T = \pi / 4$$

$$a_o = \frac{1}{T}\int_0^T f(t)dt = \frac{2}{8}\left[\int_0^2 10\cos \pi t/4 dt + 0\right] = \frac{10}{4}(\frac{4}{\pi})\sin \pi t/4 \Big|_0^2 = \frac{10}{\pi} = 3.183$$

$$a_n = \frac{4}{T}\int_0^{T/2} f(t)\cos n\omega_o dt = \frac{40}{8}[\int_0^2 10\cos \pi t/4 \cos n\pi t/4 dt + 0] = 5\int_0^2 \left[\cos \pi t(n+1)/4 + \cos \pi t(n-1)/4\right]dt$$

For n = 1,

$$a_1 = 5\int_0^2 [\cos \pi t/2 + 1]dt = 5\left[\frac{2}{\pi}\sin \pi t/2 dt + t\right]_0^2 = 10$$

For n>1,

$$a_n = \frac{20}{\pi(n+1)}\sin\frac{\pi(n+1)t}{4} + \frac{20}{\pi(n-1)}\sin\frac{\pi(n-1)t}{4}\Bigg|_0^2 = \frac{20}{\pi(n+1)}\sin\frac{\pi(n+1)}{2} + \frac{20}{\pi(n-1)}\sin\frac{\pi(n-1)}{2}$$

$$a_2 = \frac{20}{3\pi}\sin 1.5\pi + \frac{20}{\pi}\sin \pi/2 = 2{,}122066\sin(270°) + 6.3662\sin(90°)$$

$$= -2.122066 + 6.3662 = 4.244, \qquad a_3 = \frac{20}{4\pi}\sin 2\pi + \frac{10}{\pi}\sin \pi = 0$$

Thus,

$$\mathbf{a_0 = 3.183, \quad a_1 = 10, \quad a_2 = 4.244, \quad a_3 = 0, \quad b_1 = 0 = b_2 = b_3}$$

www.konkur.in

Chapter 17, Solution 10.

$T = 2\pi, \qquad \omega_o = 2\pi / T = 1$

$$c_n = \frac{1}{T}\int_0^T f(t)e^{-jn\omega_o t}dt = \frac{V_o}{2\pi}\int_0^{\pi}(1)e^{-jnt}dt = \frac{V_o}{2\pi}\frac{e^{=jnt}}{-jn}\Bigg|_0^{\pi}$$

$$= \frac{V_o}{2n\pi}\left[je^{-jn\pi} - j\right] = \frac{jV_o}{2n\pi}(\cos n\pi - 1)$$

$$\underline{f(t) = \sum_{n=-\infty}^{\infty}\frac{jV_o}{2n\pi}(\cos n\pi - 1)e^{jnt}}$$

www.konkur.in

Chapter 17, Solution 11.

$T = 4, \quad \omega_o = 2\pi / T = \pi / 2$

$$c_n = \frac{1}{T}\int_0^T y(t)e^{-jn\omega_o t}dt = \frac{1}{4}\left[\int_{-1}^{0} 10(t+1)e^{-jn\pi t/2}dt + \int_0^1 (10)e^{-jn\pi t/2}dt\right]$$

$$c_n = \frac{10}{4}\left[\frac{e^{-jn\pi t/2}}{-n^2\pi^2/4}(-jn\pi t/2-1) - \frac{2}{jn\pi}e^{-jn\pi t/2}\Big|_{-1}^{0} - \frac{2}{jn\pi}e^{-jn\pi t/2}\Big|_{0}^{1}\right]$$

$$= \frac{10}{4}\left[\frac{4}{n^2\pi^2} - \frac{2}{jn\pi} + \frac{4}{n^2\pi^2}e^{jn\pi/2}(jn\pi/2-1) + \frac{2}{jn\pi}e^{jn\pi/2} - \frac{2}{jn\pi}e^{-jn\pi/2} + \frac{2}{jn\pi}\right]$$

But

$$e^{jn\pi/2} = \cos(n\pi/2) + j\sin(n\pi/2) = j\sin(n\pi/2),$$

$$e^{-jn\pi/2} = \cos(n\pi/2) - j\sin(n\pi/2) = -j\sin(n\pi/2)$$

$$c_n = \frac{10}{n^2\pi^2}\left[1 + j(jn\pi/2-1)\sin(n\pi/2) + n\pi\sin(n\pi/2)\right]$$

$$\mathbf{y(t) = \sum_{n=-\infty}^{\infty} \frac{10}{n^2\pi^2}\left[1 + j([jn\pi/2]-1)\sin(n\pi/2) + n\pi\sin(n\pi/2)\right]e^{jn\pi t/2}}$$

www.konkur.in

Chapter 17, Solution 12.

A voltage source has a periodic waveform defined over its period as
$v(t) = 10t(2\pi - t)$ V, for all $0 < t < 2\pi$

Find the Fourier series for this voltage.

$v(t) = 10(2\pi t - t^2)$, $0 < t < 2\pi$, $T = 2\pi$, $\omega_o = 2\pi/T = 1$

$a_o =$

$$(1/T)\int_0^T f(t)dt = \frac{1}{2\pi}\int_0^{2\pi} 10(2\pi t - t^2)dt$$

$$= \frac{10}{2\pi}(\pi t^2 - t^3/3)\Big|_0^{2\pi} = \frac{40\pi^3}{2\pi}(1 - 2/3) = \frac{20\pi^2}{3}$$

$$a_n = \frac{2}{T}\int_0^T 10(2\pi t - t^2)\cos(nt)dt = \frac{10}{\pi}\left[\frac{2\pi}{n^2}\cos(nt) + \frac{2\pi t}{n}\sin(nt)\right]\Bigg|_0^{2\pi}$$

$$-\frac{10}{\pi n^3}\left[2nt\cos(nt) - 2\sin(nt) + n^2t^2\sin(nt)\right]_0^{2\pi}$$

$$= \frac{20}{n^2}(1-1) - \frac{10}{\pi n^3}4n\pi\cos(2\pi n) = \frac{-40}{n^2}$$

$$b_n = \frac{20}{T}\int_0^T (2nt - t^2)\sin(nt)dt = \frac{10}{\pi}\int_0^T (2nt - t^2)\sin(nt)dt$$

$$= \frac{2n}{\pi}\frac{10}{n^2}(\sin(nt) - nt\cos(nt))\Big|_0^{\pi} - \frac{10}{\pi n^3}(2nt\sin(nt) + 2\cos(nt) - 1n^2t^2\cos(nt))\Big|_0^{2\pi}$$

$$= \frac{-40\pi}{n} + \frac{40\pi}{n} = 0$$

Hence, $$f(t) = \frac{20\pi^2}{3} - \sum_{n=1}^{\infty}\frac{40}{n^2}\cos(nt)$$

www.konkur.in

Chapter 17, Solution 13.

Design a problem to help other students to better understand obtaining the Fourier series from a periodic function.

Although there are many ways to solve this problem, this is an example based on the same kind of problem asked in the third edition.

Problem

A periodic function is defined over its period as

$$h(t) = \begin{cases} 10\sin t, & 0 < t < \pi \\ 20\sin(t-\pi), & \pi < t < 2\pi \end{cases}$$

Find the Fourier series of h(t).

Solution

$T = 2\pi, \ \omega_o = 1$

$$a_o = (1/T)\int_0^T h(t)dt = \frac{1}{2\pi}\left[\int_0^{\pi} 10\sin t\, dt + \int_{\pi}^{2\pi} 20\sin(t-\pi)\, dt\right]$$

$$= \frac{1}{2\pi}\left[-10\cos t\Big|_0^{\pi} - 20\cos(t-\pi)\Big|_{\pi}^{2\pi}\right] = \frac{30}{\pi}$$

$$a_n = (2/T)\int_0^T h(t)\cos(n\omega_o t)dt$$

$$= [2/(2\pi)]\left[\int_0^{\pi} 10\sin t\cos(nt)dt + \int_{\pi}^{2\pi} 20\sin(t-\pi)\cos(nt)dt\right]$$

Since $\sin A\cos B = 0.5[\sin(A+B) + \sin(A-B)]$
$\sin t\cos nt = 0.5[\sin((n+1)t) + \sin((1-n))t]$
$\sin(t-\pi) = \sin t\cos\pi - \cos t\sin\pi = -\sin t$
$\sin(t-\pi)\cos(nt) = -\sin(t)\cos(nt)$

$$a_n = \frac{1}{2\pi}\left[10\int_0^{\pi}[\sin([1+n]t) + \sin([1-n]t)]dt - 20\int_{\pi}^{2\pi}[\sin([1+n]t) + \sin([1-n]t)]dt\right]$$

$$= \frac{5}{\pi}\left[\left(-\frac{\cos([1+n]t)}{1+n} - \frac{\cos([1-n]t)}{1-n}\right)\Bigg|_0^{\pi} + \left(\frac{2\cos([1+n]t)}{1+n} + \frac{2\cos([1-n]t)}{1-n}\right)\Bigg|_{\pi}^{2\pi}\right]$$

www.konkur.in

$$a_n = \frac{5}{\pi}\left[\frac{3}{1+n} + \frac{3}{1-n} - \frac{3\cos([1+n]\pi)}{1+n} - \frac{3\cos([1-n]\pi)}{1-n}\right]$$

But, $[1/(1+n)] + [1/(1-n)] = 2/(1-n^2)$

$$\cos([n-1]\pi) = \cos([n+1]\pi) = \cos\pi\cos n\pi - \sin\pi\sin n\pi = -\cos n\pi$$

$$a_n = (5/\pi)[(6/(1-n^2)) + (6\cos(n\pi)/(1-n^2))]$$

$$= [30/(\pi(1-n^2))](1+\cos n\pi) = \mathbf{[-60/(\pi(n^2-1))], n = even}$$
$$= \mathbf{0,} \qquad \mathbf{n = odd}$$

$$b_n = (2/T)\int_0^T h(t)\sin n\omega_o t\,dt$$

$$= [2/(2\pi)][\int_0^{\pi} 10\sin t\sin nt\,dt + \int_{\pi}^{2\pi} 20(-\sin t)\sin nt\,dt$$

This is an interesting function which will have a value for b_1 but not for any of the other b_n terms (they will be zero).

$$b_1 = [2/(2\pi)][\left(\int_0^{\pi} 10\sin t\sin t\,dt = 10\int_0^{\pi}\frac{1-\cos(2t)}{2}dt = 5\pi\right.$$
$$\left. + \int_{\pi}^{2\pi} 20(-\sin t)\sin t\,dt = -20\int_{\pi}^{2\pi}(\sin t)^2 dt = -10\pi\right) = -5$$

Now we can calculate the rest of the b_n for values of n = 2 and greater than 2. We note that,

$$\sin A\sin B = 0.5[\cos(A-B) - \cos(A+B)]$$

$$\sin t\sin nt = 0.5[\cos([1-n]t) - \cos([1+n]t)]$$

$$b_n = (5/\pi)\{[(\sin([1-n]t)/(1-n)) - (\sin([1+n]t)/(1+n)]\Big|_0^{\pi}$$

$$+ [(2\sin([1-n]t)/(1-n)) - (2\sin([1+n]t)/(1+n)]\Big|_{\pi}^{2\pi}\}$$

$$= \frac{5}{\pi}\left[-\frac{\sin([1-n]\pi)}{1-n} + \frac{\sin([1+n]\pi)}{1+n}\right] = 0$$

{Note, that if we substitute 1 for n, the first term is undefined!}

www.konkur.in

Thus, $$h(t) = \frac{30}{\pi} - 5\sin(t) - \frac{60}{\pi}\sum_{k=1}^{\infty}\frac{\cos(2kt)}{(4k^2-1)}$$

This does make a very good approximation!

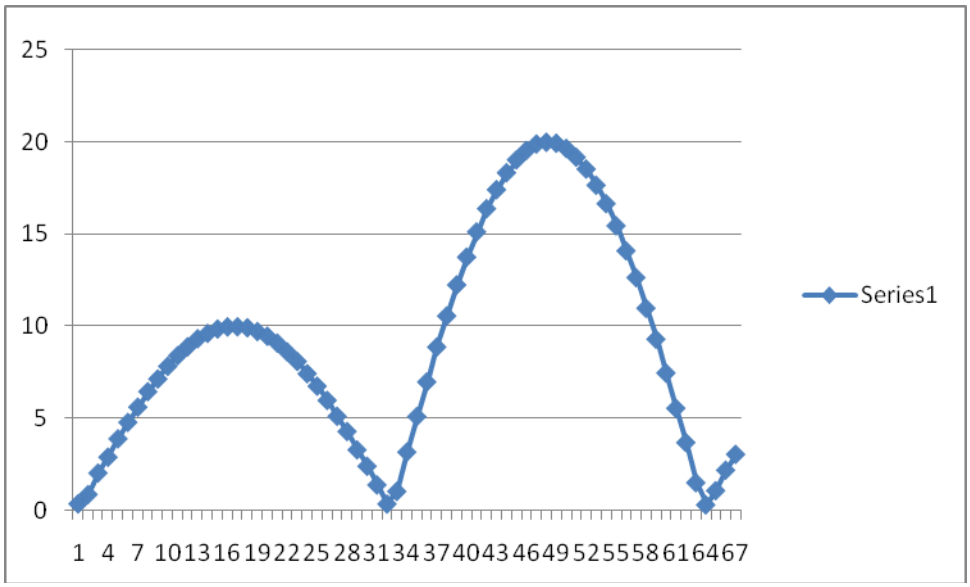

www.konkur.in

Chapter 17, Solution 14.

Since cos(A + B) = cos A cos B – sin A sin B.

$$f(t) = 5 + \sum_{n=1}^{\infty}\left(\frac{25}{n^3+1}\cos(n\pi/4)\cos(2nt) - \frac{25}{n^3+1}\sin(n\pi/4)\sin(2nt)\right)$$

www.konkur.in

Chapter 17, Solution 15.

(a) $D\cos\omega t + E\sin\omega t = A\cos(\omega t - \theta)$

where $A = \sqrt{D^2 + E^2}$, $\theta = \tan^{-1}(E/D)$

$$A = \sqrt{\frac{16}{(n^2+1)^2} + \frac{1}{n^6}}, \quad \theta = \tan^{-1}((n^2+1)/(4n^3))$$

$$f(t) = \mathbf{10 + \sum_{n=1}^{\infty} \sqrt{\frac{16}{(n^2+1)^2} + \frac{1}{n^6}} \cos\left(10nt - \tan^{-1}\frac{n^2+1}{4n^3}\right)}$$

(b) $D\cos\omega t + E\sin\omega t = A\sin(\omega t + \theta)$

where $A = \sqrt{D^2 + E^2}$, $\theta = \tan^{-1}(D/E)$

$$f(t) = \mathbf{10 + \sum_{n=1}^{\infty} \sqrt{\frac{16}{(n^2+1)^2} + \frac{1}{n^6}} \sin\left(10nt + \tan^{-1}\frac{4n^3}{n^2+1}\right)}$$

www.konkur.in

Chapter 17, Solution 16.

If $v_2(t)$ is shifted by 1 along the vertical axis, we obtain $v_2^*(t)$ shown below, i.e. $v_2^*(t) = v_2(t) + 1$.

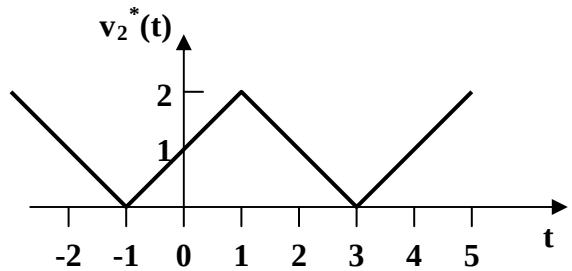

Comparing $v_2^*(t)$ with $v_1(t)$ shows that

$$v_2^*(t) = 2v_1((t + t_o)/2)$$

$$\text{where } (t + t_o)/2 = 0 \text{ at } t = -1 \text{ or } t_o = 1$$

Hence $$v_2^*(t) = 2v_1((t + 1)/2)$$

But $$v_2^*(t) = v_2(t) + 1$$

$$v_2(t) + 1 = 2v_1((t+1)/2)$$

$$v_2(t) = -1 + 2v_1((t+1)/2)$$

$$= -1 + 1 - \frac{8}{\pi^2}\left[\cos\pi\left(\frac{t+1}{2}\right) + \frac{1}{9}\cos 3\pi\left(\frac{t+1}{2}\right) + \frac{1}{25}\cos 5\pi\left(\frac{t+1}{2}\right) + \cdots\right]$$

$$v_2(t) = -\frac{8}{\pi^2}\left[\cos\left(\frac{\pi t}{2} + \frac{\pi}{2}\right) + \frac{1}{9}\cos\left(\frac{3\pi t}{2} + \frac{3\pi}{2}\right) + \frac{1}{25}\cos\left(\frac{5\pi t}{2} + \frac{5\pi}{2}\right) + \cdots\right]$$

$$v_2(t) = -\frac{8}{\pi^2}\left[\sin\left(\frac{\pi t}{2}\right) + \frac{1}{9}\sin\left(\frac{3\pi t}{2}\right) + \frac{1}{25}\sin\left(\frac{5\pi t}{2}\right) + \cdots\right]$$

www.konkur.in

Chapter 17, Solution 17.

We replace t by –t in each case and see if the function remains unchanged.

(a) $1 - t$, **neither odd nor even.**

(b) $t^2 - 1$, **even**

(c) $\cos n\pi(-t) \sin n\pi(-t) = -\cos n\pi t \sin n\pi t$, **odd**

(d) $\sin^2 n(-t) = (-\sin \pi t)^2 = \sin^2 \pi t$, **even**

(e) e^t, **neither odd nor even**.

www.konkur.in

Chapter 17, Solution 18.

(a) $T = 2$ leads to $\omega_o = 2\pi/T = \boldsymbol{\pi}$

$f_1(-t) = -f_1(t)$, showing that $f_1(t)$ is **odd and half-wave symmetric**.

(b) $T = 3$ leads to $\omega_o = 2\pi/3$

$f_2(t) = f_2(-t)$, showing that $f_2(t)$ is **even**.

(c) $T = 4$ leads to $\omega_o = \pi/2$

$f_3(t)$ is **even and half-wave symmetric**.

www.konkur.in

Chapter 17, Solution 19.

$T = 4, \quad \omega_o = 2\pi / T = \pi / 2$

$$f(t) = \begin{cases} 10t, & 0 < t < 1 \\ 10(2-t), & 1 < t < 2 \end{cases}$$

$$a_0 = \frac{1}{T}\int_0^T f(t)dt = \frac{1}{4}\int_0^1 10t\,dt + \frac{1}{4}\int_1^2 10(2-t)dt = \frac{1}{4}5t^2\Big|_0^1 + \frac{10}{4}(2t - \frac{t^2}{2})\Big|_1^2 = 2.5$$

$$a_n = \frac{2}{T}\int_0^T f(t)\cos n\omega_o t\,dt = \frac{2}{4}\int_0^1 10t\cos n\omega_o t\,dt + \frac{2}{4}\int_1^2 10(2-t)\cos n\omega_o t\,dt$$

$$= \frac{20}{n\omega_o}\cos n\omega_o t + \frac{t}{n\omega_o}\sin n\omega_o t\Big|_0^1 + \frac{10}{n\omega_o}\sin n\omega_o t\Big|_1^2 + \frac{5}{n^2\omega_o^2}\cos n\omega_o t + \frac{5t}{n\omega_o}\sin n\omega_o t\Big|_1^2$$

$$= \frac{20}{n\omega_o}(\cos n\pi/2 - 1) + \frac{1}{n\omega_o}\sin n\pi/2 + \frac{10}{n\omega_o}(\sin n\pi - \sin n\pi/2) + \frac{5}{n^2\pi^2/4}\cos n\pi$$

$$-\frac{5}{n^2\pi^2/4}\cos n\pi/2 + \frac{10}{n\omega_o}\sin n\pi - \frac{5}{n\pi/2}\sin n\pi/2$$

$$b_n = \frac{2}{T}\int_0^T f(t)\sin n\omega_o t\,dt = \frac{2}{4}\int_0^1 10t\sin n\omega_o t\,dt + \frac{2}{4}\int_1^2 10(2-t)\sin n\omega_o t\,dt$$

$$= \frac{5}{n\omega_o}\sin n\omega_o t\Big|_0^1 - \frac{10}{n\omega_o}\cos n\omega_o t\Big|_0^1 - \frac{5}{n^2\omega_o^2}\sin n\omega_o t\Big|_1^2 + \frac{t}{n\omega_o}\cos n\omega_o t\Big|_1^2$$

$$= \frac{5}{n^2\omega_o^2}\sin n\pi/2 - \frac{10}{n\omega_o}(\cos\pi n - \cos n\pi/2) - \frac{5}{n^2\omega_o^2}(\sin\pi n - \sin n\pi/2)$$

$$-\frac{2}{n\omega_o}\cos n\pi - \frac{\cos\pi n/2}{n\omega_o}$$

www.konkur.in

Chapter 17, Solution 20.

This is an even function.

$$b_n = 0,\ T = 6,\ \omega = 2\pi/6 = \pi/3$$

$$a_o = \frac{2}{T}\int_0^{T/2} f(t)dt = \frac{2}{6}\left[\int_1^2 (4t-4)dt \int_2^3 4\,dt\right]$$

$$= \frac{1}{3}\left[(2t^2 - 4t)\Big|_1^2 + 4(3-2)\right] = 2$$

$$a_n = \frac{4}{T}\int_0^{T/4} f(t)\cos(n\pi t/3)dt$$

$$= (4/6)[\int_1^2 (4t-4)\cos(n\pi t/3)dt + \int_2^3 4\cos(n\pi t/3)dt\,]$$

$$= \frac{16}{6}\left[\frac{9}{n^2\pi^2}\cos\left(\frac{n\pi t}{3}\right) + \frac{3t}{n\pi}\sin\left(\frac{n\pi t}{3}\right) - \frac{3}{n\pi}\sin\left(\frac{n\pi t}{3}\right)\right]_1^2 + \frac{16}{6}\left[\frac{3}{n\pi}\sin\left(\frac{n\pi t}{3}\right)\right]_2^3$$

$$= [24/(n^2\pi^2)][\cos(2n\pi/3) - \cos(n\pi/3)]$$

Thus $$f(t) = \mathbf{2 + \frac{24}{\pi^2}\sum_{n=1}^{\infty}\frac{1}{n^2}\left[\cos\left(\frac{2\pi n}{3}\right) - \cos\left(\frac{\pi n}{3}\right)\right]\cos\left(\frac{n\pi t}{3}\right)}$$

At t = 2,

$$f(2) = 2 + (24/\pi^2)[(\cos(2\pi/3) - \cos(\pi/3))\cos(2\pi/3)$$

$$+ (1/4)(\cos(4\pi/3) - \cos(2\pi/3))\cos(4\pi/3)$$

$$+ (1/9)(\cos(2\pi) - \cos(\pi))\cos(2\pi) + \text{-----}]$$

$$= 2 + 2.432(0.5 + 0 + 0.2222 + \text{-----})$$

$f(2) =$ **3.756**

www.konkur.in

Chapter 17, Solution 21.

This is an even function.

$b_n = 0,\ T = 4,\ \omega_o = 2\pi/T = \pi/2.$

$$f(t) = 2 - 2t, \qquad 0 < t < 1$$
$$\quad = 0, \qquad 1 < t < 2$$

$$a_o = \frac{2}{4}\int_0^1 2(1-t)dt = \left[t - \frac{t^2}{2}\right]_0^1 = 0.5$$

$$a_n = \frac{4}{T}\int_0^{T/2} f(t)\cos(n\omega_o t)dt = \frac{4}{4}\int_0^1 2(1-t)\cos\left(\frac{n\pi t}{2}\right)dt$$

$$= [8/(\pi^2 n^2)][1 - \cos(n\pi/2)]$$

$$f(t) = \mathbf{\frac{1}{2} + \sum_{n=1}^{\infty}\frac{8}{n^2\pi^2}\left[1 - \cos\left(\frac{n\pi}{2}\right)\right]\cos\left(\frac{n\pi t}{2}\right)}$$

www.konkur.in

Chapter 17, Solution 22.

Calculate the Fourier coefficients for the function in Fig. 16.54.

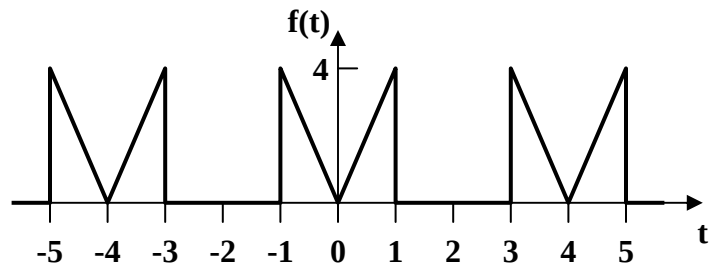

Figure 16.54 For Prob. 16.15

This is an even function, therefore $b_n = 0$. In addition, T=4 and $\omega_o = \pi/2$.

$$a_o = \frac{2}{T}\int_0^{T/2} f(t)dt = \frac{2}{4}\int_0^1 4tdt = t^2\Big|_0^1 = \underline{\mathbf{1}}$$

$$a_n = \frac{4}{T}\int_0^{T/2} f(t)\cos(\omega_o nt)dt = \frac{4}{4}\int_0^1 4t\cos(n\pi t/2)dt$$

$$= 4\left[\frac{4}{n^2\pi^2}\cos(n\pi t/2) + \frac{2t}{n\pi}\sin(n\pi t/2)\right]\Bigg|_0^1$$

$$a_n = \mathbf{\frac{16}{n^2\pi^2}(\cos(n\pi/2) - 1) + \frac{8}{n\pi}\sin(n\pi/2)}$$

www.konkur.in

Chapter 17, Solution 23.

Using Fig. 17.61, design a problem to help other students to better understand finding the Fourier series of a periodic wave shape.

Although there are many ways to solve this problem, this is an example based on the same kind of problem asked in the third edition.

Problem

Find the Fourier series of the function shown in Fig. 17.61.

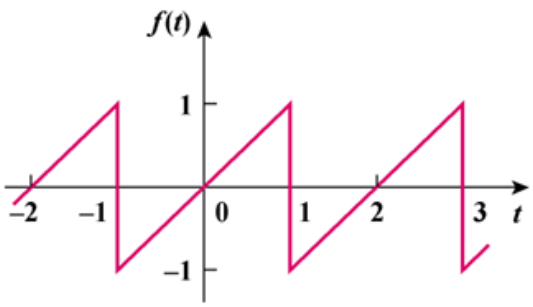

Figure 17.61

Solution

f(t) is an odd function.

$f(t) = t, \ -1 < t < 1$

$a_o = 0 = a_n, \ T = 2, \ \omega_o = 2\pi/T = \pi$

$$b_n = \frac{4}{T}\int_0^{T/2} f(t)\sin(n\omega_o t)dt = \frac{4}{2}\int_0^1 t\sin(n\pi t)dt$$

$$= \frac{2}{n^2\pi^2}\left[\sin(n\pi t) - n\pi t\cos(n\pi t)\right]_0^1$$

$$= -[2/(n\pi)]\cos(n\pi) = 2(-1)^{n+1}/(n\pi)$$

$$f(t) = \frac{2}{\pi}\sum_{n=1}^{\infty}\frac{(-1)^{n+1}}{n}\sin(n\pi t)$$

www.konkur.in

Chapter 17, Solution 24.

(a) This is an odd function.

$$a_o = 0 = a_n,\ T = 2\pi,\ \omega_o = 2\pi/T = 1$$

$$b_n = \frac{4}{T}\int_0^{T/2} f(t)\sin(\omega_o nt)dt$$

$$f(t) = 1 + t/\pi, \qquad 0 < t < \pi$$

$$b_n = \frac{4}{2\pi}\int_0^{\pi}(1 + t/\pi)\sin(nt)dt$$

$$= \frac{2}{\pi}\left[-\frac{1}{n}\cos(nt) + \frac{1}{n^2\pi}\sin(nt) - \frac{t}{n\pi}\cos(nt)\right]_0^{\pi}$$

$$= [2/(n\pi)][1 - 2\cos(n\pi)] = [2/(n\pi)][1 + 2(-1)^{n+1}]$$

$$a_2 = \underline{\mathbf{0}},\ b_2 = [2/(2\pi)][1 + 2(-1)] = -1/\pi = \mathbf{-0.3183}$$

(b) $\omega n = n\omega_o = 10$ or $n = 10$

$$a_{10} = 0,\ b_{10} = [2/(10\pi)][1 - \cos(10\pi)] = -1/(5\pi)$$

Thus the magnitude is $A_{10} = \sqrt{a_{10}^2 + b_{10}^2} = 1/(5\pi) = \mathbf{0.06366}$

and the phase is $\phi_{10} = \tan^{-1}(b_n/a_n) = \mathbf{-90°}$

(c)
$$f(t) = \sum_{n=1}^{\infty}\frac{2}{n\pi}[1 - 2\cos(n\pi)]\sin(nt)\,\pi$$

$$f(\pi/2) = \sum_{n=1}^{\infty}\frac{2}{n\pi}[1 - 2\cos(n\pi)]\sin(n\pi/2)\,\pi$$

For $n = 1$, $f_1 = (2/\pi)(1 + 2) = 6/\pi$

For $n = 2$, $f_2 = 0$

For $n = 3$, $f_3 = [2/(3\pi)][1 - 2\cos(3\pi)]\sin(3\pi/2) = -6/(3\pi)$

For $n = 4$, $f_4 = 0$

www.konkur.in

For n = 5, $f_5 = 6/(5\pi)$, ----

Thus, $f(\pi/2) = 6/\pi - 6/(3\pi) + 6/(5\pi) - 6/(7\pi)$ ---------

$= (6/\pi)[1 - 1/3 + 1/5 - 1/7 +$ --------]

$f(\pi/2) \cong$ **1.3824**

which is within 8% of the exact value of 1.5.

(d) From part (c)

$f(\pi/2) = 1.5 = (6/\pi)[1 - 1/3 + 1/5 - 1/7 +$ - - -]

$(3/2)(\pi/6) = [1 - 1/3 + 1/5 - 1/7 +$ - - -]

or $\pi/4 =$ **1 – 1/3 + 1/5 – 1/7 + - - -**

www.konkur.in

Chapter 17, Solution 25.

This is a half-wave (odd) function since f(t–T/2) = –f(t).

$a_o = 0$, $a_n = b_n = 0$ for n = even, T = 3, $\omega_o = 2\pi/3$.

For n = odd,

$$a_n = \frac{4}{3}\int_0^{1.5} f(t)\cos n\omega_0 t dt = \frac{4}{3}\int_0^1 t\cos n\omega_0 t dt$$

$$= \frac{4}{3}\left[\frac{9}{4\pi^2 n^2}\cos\left(\frac{2\pi nt}{3}\right) + \frac{3t}{2\pi n}\sin\left(\frac{2\pi nt}{3}\right)\right]_0^1$$

$$= \left[\frac{3}{\pi^2 n^2}\left(\cos\left(\frac{2\pi n}{3}\right) - 1\right) + \frac{2}{\pi n}\sin\left(\frac{2\pi n}{3}\right)\right]$$

$$b_n = \frac{4}{3}\int_0^{1.5} f(t)\sin(n\omega_o t)dt = \frac{4}{3}\int_0^1 t\sin(2\pi nt/3)dt$$

$$= \frac{4}{3}\left[\frac{9}{4\pi^2 n^2}\sin\left(\frac{2\pi nt}{3}\right) - \frac{3t}{2n\pi}\cos\left(\frac{2\pi nt}{3}\right)\right]_0^1$$

$$= \left[\frac{3}{\pi^2 n^2}\sin\left(\frac{2\pi n}{3}\right) - \frac{2}{\pi n}\cos\left(\frac{2\pi n}{3}\right)\right]$$

$$f(t) = \sum_{\substack{n=1\\ n=odd}}^{\infty}\left\{\begin{array}{l}\left[\frac{3}{\pi^2 n^2}\left(\cos\left(\frac{2\pi n}{3}\right) - 1\right) + \frac{2}{\pi n}\sin\left(\frac{2\pi n}{3}\right)\right]\cos\left(\frac{2\pi nt}{3}\right)\\ + \left[\frac{3}{\pi^2 n^2}\sin\left(\frac{2\pi n}{3}\right) - \frac{2}{n\pi}\cos\left(\frac{2\pi n}{3}\right)\right]\sin\left(\frac{2\pi nt}{3}\right)\end{array}\right\}$$

www.konkur.in

Chapter 17, Solution 26.

$T = 4, \ \omega_o = 2\pi/T = \pi/2$

$$a_o = \frac{1}{T}\int_0^T f(t)dt = \frac{1}{4}\left[\int_0^1 1\,dt + \int_1^3 2\,dt + \int_3^4 1\,dt\right] = 1$$

$$a_n = \frac{2}{T}\int_0^T f(t)\cos(n\omega_o t)dt$$

$$a_n = \frac{2}{4}\left[\int_1^2 1\cos(n\pi t/2)dt + \int_2^3 2\cos(n\pi t/2)dt + \int_3^4 1\cos(n\pi t/2)dt\right]$$

$$= 2\left[\frac{2}{n\pi}\sin\frac{n\pi t}{2}\bigg|_1^2 + \frac{4}{n\pi}\sin\frac{n\pi t}{2}\bigg|_2^3 + \frac{2}{n\pi}\sin\frac{n\pi t}{2}\bigg|_3^4\right]$$

$$= \frac{4}{n\pi}\left[\sin\frac{3n\pi}{2} - \sin\frac{n\pi}{2}\right]$$

$$b_n = \frac{2}{T}\int_0^T f(t)\sin(n\omega_o t)dt$$

$$= \frac{2}{4}\left[\int_1^2 1\sin\frac{n\pi t}{2}dt + \int_2^3 2\sin\frac{n\pi t}{2}dt + \int_3^4 1\sin\frac{n\pi t}{2}dt\right]$$

$$= 2\left[-\frac{2}{n\pi}\cos\frac{n\pi t}{2}\bigg|_1^2 - \frac{4}{n\pi}\cos\frac{n\pi t}{2}\bigg|_2^3 - \frac{2}{n\pi}\cos\frac{n\pi t}{2}\bigg|_3^4\right]$$

$$= \frac{4}{n\pi}\left[\cos(n\pi) - 1\right]$$

Hence

$$f(t) = \mathbf{1 + \sum_{n=1}^{\infty}\frac{4}{n\pi}\left[(\sin(3n\pi/2) - \sin(n\pi/2))\cos(n\pi t/2) + (\cos(n\pi) - 1)\sin(n\pi t/2)\right]}$$

www.konkur.in

Chapter 17, Solution 27.

(a) **odd** symmetry.

(b) $a_o = 0 = a_n,\ T = 4,\ \omega_o = 2\pi/T = \pi/2$

$$f(t) = t, \quad 0 < t < 1$$
$$= 0, \quad 1 < t < 2$$

$$b_n = \frac{4}{4}\int_0^1 t \sin\frac{n\pi t}{2}\,dt = \left[\frac{4}{n^2\pi^2}\sin\frac{n\pi t}{2} - \frac{2t}{n\pi}\cos\frac{n\pi t}{2}\right]_0^1$$

$$= \frac{4}{n^2\pi^2}\sin\frac{n\pi}{2} - \frac{2}{n\pi}\cos\frac{n\pi}{2} - 0$$

$$= 4(-1)^{(n-1)/2}/(n^2\pi^2), \qquad n = \text{odd}$$

$$-2(-1)^{n/2}/(n\pi), \qquad n = \text{even}$$

$$a_3 = \mathbf{0},\ b_3 = 4(-1)/(9\pi^2) = \mathbf{-0.04503}$$

(c) $b_1 = 4/\pi^2,\ b_2 = 1/\pi,\ b_3 = -4/(9\pi^2),\ b_4 = -1/(2\pi),\ b_5 = 4/(25\pi^2)$

$$F_{rms} = \sqrt{a_o^2 + \frac{1}{2}\sum\left(a_n^2 + b_n^2\right)}$$

$$F_{rms}^2 = 0.5\Sigma b_n^2 = [1/(2\pi^2)][(16/\pi^2) + 1 + (16/(81\pi^2)) + (1/4) + (16/(625\pi^2))]$$

$$= (1/19.729)(2.6211 + 0.27 + 0.00259)$$

$$F_{rms} = \sqrt{0.14667} = \mathbf{0.383}$$

Compare this with the exact value of $F_{rms} = \sqrt{\frac{2}{T}\int_0^1 t^2 dt} = \sqrt{1/6} = 0.4082$ or (0.383/0.4082)x100 = 93.83%, close.

www.konkur.in

Chapter 17, Solution 28.

This is half-wave symmetric since f(t – T/2) = –f(t).

$$a_o = 0,\ T = 2,\ \omega_o = 2\pi/2 = \pi$$

$$a_n = \frac{4}{T}\int_0^{T/2} f(t)\cos(n\omega_o t)dt = \frac{4}{2}\int_0^1 (2-2t)\cos(n\pi t)dt$$

$$= 4\left[\frac{1}{n\pi}\sin(n\pi t) - \frac{1}{n^2\pi^2}\cos(n\pi t) - \frac{t}{n\pi}\sin(n\pi t)\right]\Bigg|_0^1$$

$$= [4/(n^2\pi^2)][1-\cos(n\pi)] = \begin{cases} 8/(n^2\pi^2), & n = \text{odd} \\ 0, & n = \text{even} \end{cases}$$

$$b_n = 4\int_0^1 (1-t)\sin(n\pi t)dt$$

$$= 4\left[-\frac{1}{n\pi}\cos(n\pi t) - \frac{1}{n^2\pi^2}\sin(n\pi t) + \frac{t}{n\pi}\cos(n\pi t)\right]\Bigg|_0^1$$

$$= 4/(n\pi),\quad n = \text{odd}$$

$$f(t) = \sum_{k=1}^{\infty}\left(\frac{8}{n^2\pi^2}\cos(n\pi t) + \frac{4}{n\pi}\sin(n\pi t)\right), n = 2k-1$$

www.konkur.in

Chapter 17, Solution 29.

This function is half-wave symmetric.

$$T = 2\pi,\ \omega_o = 2\pi/T = 1,\ f(t) = -t,\ 0 < t < \pi$$

For odd n, $$a_n = \frac{2}{T}\int_0^{\pi}(-t)\cos(nt)dt = -\frac{2}{n^2\pi}\Big[\cos(nt) + nt\sin(nt)\Big]_0^{\pi} = 4/(n^2\pi)$$

$$b_n = \frac{2}{\pi}\int_0^{\pi}(-t)\sin(nt)dt = -\frac{2}{n^2\pi}\Big[\sin(nt) - nt\cos(nt)\Big]_0^{\pi} = -2/n$$

Thus,

$$f(t) = \mathbf{2\sum_{k=1}^{\infty}\left[\frac{2}{n^2\pi}\cos(nt) - \frac{1}{n}\sin(nt)\right],\qquad n = 2k-1}$$

www.konkur.in

Chapter 17, Solution 30.

$$c_n = \frac{1}{T}\int_{-T/2}^{T/2} f(t)e^{-jn\omega_o t}dt = \frac{1}{T}\left[\int_{-T/2}^{T/2} f(t)\cos n\omega_o t dt - j\int_{-T/2}^{T/2} f(t)\sin n\omega_o t dt\right] \qquad (1)$$

(a) The second term on the right hand side vanishes if f(t) is even. Hence

$$\mathbf{c_n = \frac{2}{T}\int_0^{T/2} f(t)\cos n\omega_o t dt}$$

(b) The first term on the right hand side of (1) vanishes if f(t) is odd. Hence,

$$\mathbf{c_n = -\frac{j2}{T}\int_0^{T/2} f(t)\sin n\omega_o t dt}$$

www.konkur.in

Chapter 17, Solution 31.

If $\mathbf{h(t) = f(\alpha t)}$, $\quad \mathbf{T' = T/\alpha} \quad \longrightarrow \quad \omega_o' = \dfrac{2\pi}{T'} = \dfrac{2\pi}{T/\alpha} = \underline{\alpha\omega_o}$

$$a_n' = \frac{2}{T'}\int_0^{T'} h(t)\cos n\omega_o' t dt = \frac{2}{T'}\int_0^{T'} f(\alpha t)\cos n\omega_o' t dt$$

Let $\alpha t = \lambda,,$ $\quad dt = d\lambda/\alpha,$ $\quad \alpha T' = T$

$$a_n' = \frac{2\alpha}{T}\int_0^{T} f(\lambda)\cos n\omega_o \lambda d\lambda/\alpha = a_n$$

Similarly, $\quad \underline{b_n' = b_n}$

www.konkur.in

Chapter 17, Solution 32.

When $i_s = 1$ (DC component)

$$i = 1/(1 + 2) = 1/3$$

For $n \geq 1$, $\omega_n = 3n$, $I_s = 1/n^2\angle 0°$

$$I = [1/(1 + 2 + j\omega_n^2)]I_s = I_s/(3 + j6n)$$

$$= \frac{\frac{1}{n^2}\angle 0°}{3\sqrt{1+4n^2}\angle \tan^{-1}(6n/3)} = \frac{1}{3n^2\sqrt{1+4n^2}}\angle -\tan(2n)$$

Thus,

$$i(t) = \mathbf{\frac{1}{3} + \sum_{n=1}^{\infty} \frac{1}{3n^2\sqrt{1+4n^2}} \cos(3n - \tan^{-1}(2n))}$$

www.konkur.in

Chapter 17, Solution 33.

For the DC case, the inductor acts like a short, $V_o = 0$.

For the AC case, we obtain the following:

$$\frac{V_o - V_s}{10} + \frac{V_o}{j2n\pi} + \frac{jn\pi V_o}{4} = 0$$

$$\left(1 + j\left(2.5n\pi - \frac{5}{n\pi}\right)\right)V_o = V_s$$

$$V_o = \frac{V_s}{1 + j\left(2.5n\pi - \frac{5}{n\pi}\right)}$$

$$A_n\angle\Theta_n = \frac{4}{n\pi}\frac{1}{1 + j\left(2.5n\pi - \frac{5}{n\pi}\right)} = \frac{4}{n\pi + j(2.5n^2\pi^2 - 5)}$$

$$\mathbf{A_n = \frac{4}{\sqrt{n^2\pi^2 + (2.5n^2\pi^2 - 5)^2}};\ \Theta_n = -\tan^{-1}\left(\frac{2.5n^2\pi^2 - 5}{n\pi}\right)}$$

$$\underline{\mathbf{v_o(t) = \sum_{n=1}^{\infty} A_n \sin(n\pi t + \Theta_n)\,V}}$$

www.konkur.in

Chapter 17, Solution 34.

Using Fig. 17.70, design a problem to help other students to better understand circuit responses to a Fourier series.

Although there are many ways to solve this problem, this is an example based on the same kind of problem asked in the third edition.

Problem

Obtain $v_o(t)$ in the network of Fig. 17.70 if

$$v(t) = \sum_{n=1}^{\infty} \frac{10}{n^2} \cos\left(nt + \frac{n\pi}{4}\right) V$$

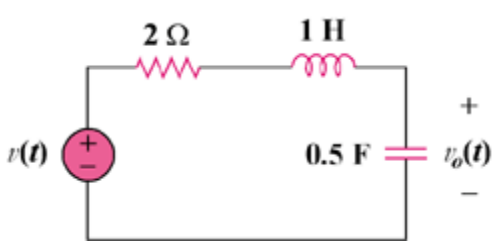

Figure 17.70

Solution

For any n, $V = [10/n^2]\angle(n\pi/4)$, $\omega = n$.

1 H becomes $j\omega_n L = jn$ and 0.5 F becomes $1/(j\omega_n C) = -j2/n$

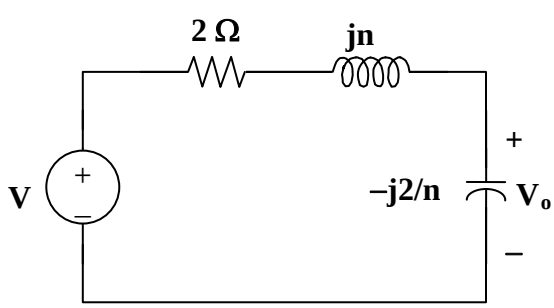

$V_o = \{-j(2/n)/[2 + jn - j(2/n)]\}V = \{-j2/[2n + j(n^2 - 2)]\}[(10/n^2)\angle(n\pi/4)]$

www.konkur.in

$$= \frac{20\angle((n\pi/4)-\pi/2)}{n^2\sqrt{4n^2+(n^2-2)^2}\angle\tan^{-1}((n^2-2)/2n)}$$

$$= \frac{20}{n^2\sqrt{n^4+4}}\angle[(n\pi/4)-(\pi/2)-\tan^{-1}((n^2-2)/2n)]$$

$$v_o(t) = \sum_{n=1}^{\infty}\frac{\mathbf{20}}{\mathbf{n^2\sqrt{n^4+4}}}\mathbf{cos}\left(\mathbf{nt}+\frac{\mathbf{n\pi}}{\mathbf{4}}-\frac{\boldsymbol{\pi}}{\mathbf{2}}-\mathbf{tan^{-1}}\frac{\mathbf{n^2-2}}{\mathbf{2n}}\right)$$

www.konkur.in

Chapter 17, Solution 35.

If v_s in the circuit of Fig. 17.72 is the same as function $f_2(t)$ in Fig. 17.57(b), determine the dc component and the first three nonzero harmonics of $v_o(t)$.

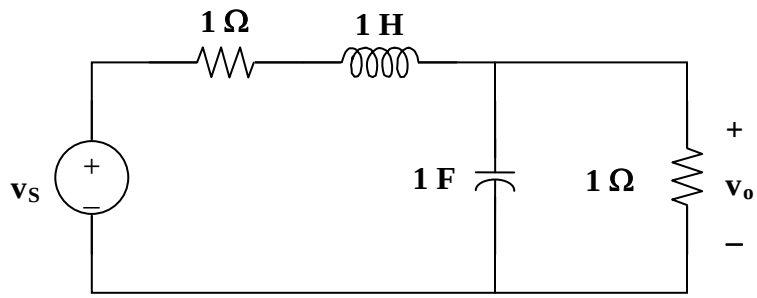

Figure 16.64 For Prob. 16.25

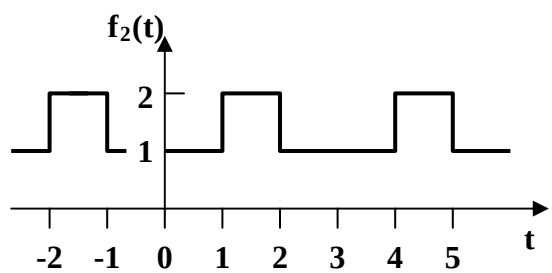

Figure 16.50(b) For Prob. 16.25

The signal is even, hence, $b_n = 0$. In addition, $T = 3$, $\omega_o = 2\pi/3$.

$$v_s(t) = 1 \text{ for all } 0 < t < 1$$
$$= 2 \text{ for all } 1 < t < 1.5$$

$$a_o = \frac{2}{3}\left[\int_0^1 1dt + \int_1^{1.5} 2dt\right] = \frac{4}{3}$$

$$a_n = \frac{4}{3}\left[\int_0^1 \cos(2n\pi t/3)dt + \int_1^{1.5} 2\cos(2n\pi t/3)dt\right]$$

$$= \frac{4}{3}\left[\frac{3}{2n\pi}\sin(2n\pi t/3)\Big|_0^1 + \frac{6}{2n\pi}\sin(2n\pi t/3)\Big|_1^{1.5}\right] = -\frac{2}{n\pi}\sin(2n\pi/3)$$

$$v_s(t) = \frac{4}{3} - \frac{2}{\pi}\sum_{n=1}^{\infty}\frac{1}{n}\sin(2n\pi/3)\cos(2n\pi t/3)$$

www.konkur.in

Now consider this circuit,

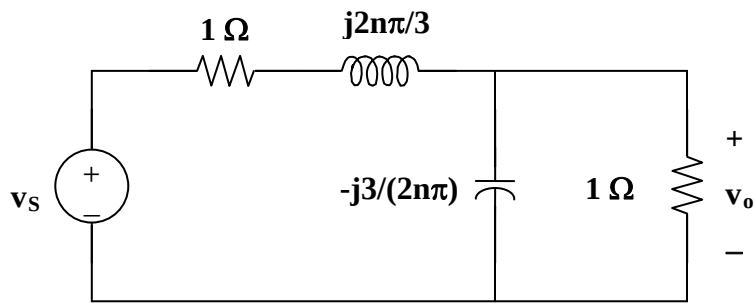

Let Z = [-j3/(2nπ)](1)/(1 – j3/(2nπ)) = -j3/(2nπ - j3)

Therefore, $v_o = Zv_s/(Z + 1 + j2n\pi/3)$. Simplifying, we get

$$v_o = \frac{-j9v_s}{12n\pi + j(4n^2\pi^2 - 18)}$$

For the dc case, n = 0 and v_s = ¾ V and $v_o = v_s/2$ = 3/8 V.

We can now solve for $v_o(t)$

$$v_o(t) = \left[\frac{3}{8} + \sum_{n=1}^{\infty} A_n \cos\left(\frac{2n\pi t}{3} + \Theta_n\right)\right] \text{volts}$$

where $A_n = \dfrac{\dfrac{6}{n\pi}\sin(2n\pi/3)}{\sqrt{16n^2\pi^2 + \left(\dfrac{4n^2\pi^2}{3} - 6\right)^2}}$ and $\Theta_n = 90^o - \tan^{-1}\left(\dfrac{n\pi}{3} - \dfrac{3}{2n\pi}\right)$

where we can further simplify A_n to this, $A_n = \dfrac{9\sin(2n\pi/3)}{n\pi\sqrt{4n^4\pi^4 + 81}}$

www.konkur.in

Chapter 17, Solution 36.

We first find the Fourier series expansion of v_s. $T = 1$, $\omega_o = 2\pi / T = 2\pi$

$$a_0 = \frac{1}{T}\int_0^T f(t)dt = \frac{1}{2}\int_0^1 10(1-t)tdt = 10(t - \frac{t^2}{2})\Big|_1^0 = 5$$

$$a_n = \frac{2}{T}\int_0^T f(t)\cos n\omega_o t dt = 2\int_0^1 10(1-t)\cos 2n\pi t dt$$

$$= 20\left[\frac{1}{2\pi n}\sin 2n\pi t - \frac{1}{4n^2\pi^2}\cos 2n\pi t - \frac{t}{2n\pi}\sin 2n\pi t\right]\Big|_o^1 = 0$$

$$b_n = \frac{2}{T}\int_0^T f(t)\sin n\omega_o t dt = \frac{2}{2}\int_0^1 10(1-t)t\sin n\omega_o t dt$$

$$= 20\left[-\frac{1}{2n\pi}\cos 2n\pi t - \frac{1}{4n^2\pi^2}\sin 2n\pi t + \frac{1}{2n\pi}\cos 2n\pi t\right]\Big|_0^1 = \frac{10}{n\pi}$$

$$v_s(t) = 5 + \sum_{n=1}^{\infty}\frac{10}{n\pi}\sin 2n\pi t$$

$$1H \longrightarrow j\omega_n L = j\omega_n$$

$$10mF \longrightarrow \frac{1}{j\omega_n C} = \frac{1}{j\omega_n 0.01} = \frac{-j100}{\omega_n}$$

$$I_o = \frac{V_s}{5 + j\omega_n - \frac{j100}{\omega_n}}$$

For dc component, $\omega_0 = 0$ which leads to $I_0 = 0$.

For the nth harmonic,

$$\mathbf{I_n = \frac{\frac{10}{n\pi}\angle 0°}{5 + j2n\pi - \frac{j100}{2n\pi}} = \frac{10}{5n\pi + j(2n^2\pi^2 - 50)} = A_n\angle\phi_n}$$

where

www.konkur.in

$$A_n = \frac{10}{\sqrt{25n^2\pi^2 + (2n^2\pi^2 - 50)^2}}, \qquad \phi_n = -\tan^{-1}\frac{2n^2\pi^2 - 50}{5n\pi}$$

$$\underline{i_o(t) = \sum_{n=1}^{\infty} A_n \sin(2n\pi t + \phi_n)}$$

www.konkur.in

Chapter 17, Solution 37.

We first need to express i_s in Fourier series. $T = 2, \quad \omega_o = 2\pi / T = \pi$

$$a_o = \frac{1}{T}\int_0^T f(t)dt = \frac{1}{2}\left[\int_0^1 3dt + \int_1^2 1dt\right] = \frac{1}{2}(3+1) = 2$$

$$a_n = \frac{2}{T}\int_0^T f(t)\cos n\omega_o t dt = \frac{2}{2}\left[\int_0^1 3\cos n\pi t dt + \int_1^2 \cos n\pi t dt\right] = \frac{3}{n\pi}\sin n\pi t\Big|_0^1 + \frac{1}{n\pi}\sin n\pi t\Big|_1^2 = 0$$

$$b_n = \frac{2}{T}\int_0^T f(t)\sin n\omega_o t dt = \frac{2}{2}\left[\int_0^1 3\sin n\pi t dt + \int_1^2 \sin n\pi t dt\right] = \frac{-3}{n\pi}\cos n\pi t\Big|_0^1 + \frac{-1}{n\pi}\cos n\pi t\Big|_1^2 = \frac{2}{n\pi}(1-\cos n\pi$$

$$i_s(t) = 2 + \sum_{n=1}^{\infty}\frac{2}{n\pi}(1-\cos n\pi)\sin n\pi t$$

By current division,

$$I_o = \frac{1}{1+2+j\omega_n L} I_s = \frac{I_s}{3+j3\omega_n}$$

$$V_o = j\omega_n L I_o = \frac{j\omega_n 3 I_s}{3+j3\omega_n} = \frac{j\omega_n I_s}{1+j\omega_n}$$

For dc component (n=0), $V_o = 0$.
For the nth harmonic,

$$V_o = \frac{jn\pi}{1+jn\pi}\frac{2}{n\pi}(1-\cos n\pi)\angle -90° = \frac{2(1-\cos n\pi)}{\sqrt{1+n^2\pi^2}}\angle(90° - \tan^{-1} n\pi - 90°)$$

$$\underline{v_o(t) = \sum_{n=1}^{\infty}\frac{2(1-\cos\pi n)}{\sqrt{1+n^2\pi^2}}\cos(n\pi t - \tan^{-1} n\pi)}$$

www.konkur.in

Chapter 17, Solution 38.

$$v_s(t) = \frac{1}{2} + \frac{2}{\pi}\sum_{k=1}^{\infty}\frac{1}{n}\sin n\pi t, \qquad n = 2k+1$$

$$V_o = \frac{j\omega_n}{1+j\omega_n}V_s, \qquad \omega_n = n\pi$$

For dc, $\omega_n = 0, \quad V_s = 0.5, \quad V_o = 0$

For nth harmonic, $V_s = \frac{2}{n\pi}\angle -90^o$

$$V_o = \frac{n\pi\angle 90^o}{\sqrt{1+n^2\pi^2}\angle \tan^{-1} n\pi} \bullet \frac{2}{n\pi}\angle 90^o = \frac{2\angle -\tan^{-1} n\pi}{\sqrt{1+n^2\pi^2}}$$

$$\mathbf{v_o(t) = \sum_{k=1}^{\infty}\frac{2}{\sqrt{1+n^2\pi^2}}\cos(n\pi t - \tan^{-1} n\pi), \qquad n = 2k-1}$$

www.konkur.in

Chapter 17, Solution 39.

Comparing $v_s(t)$ with f(t) in Figure 15.1, v_s is shifted by 2.5 and the magnitude is 5 times that of f(t).
Hence

$$v_s(t) = 5 + \frac{10}{\pi}\sum_{k=1}^{\infty}\frac{1}{n}\sin(n\pi t), \qquad n = 2k - 1$$

$$T = 2,\ \omega_o = 2\pi//T = \pi,\ \omega_n = n\omega_o = n\pi$$

For the DC component, $\qquad i_o = 5/(20 + 40) = 1/12$

For the kth harmonic, $\qquad V_s = (10/(n\pi))\angle 0°$

$$100 \text{ mH becomes } j\omega_n L = jn\pi x0.1 = j0.1n\pi$$
$$50 \text{ mF becomes } 1/(j\omega_n C) = -j20/(n\pi)$$

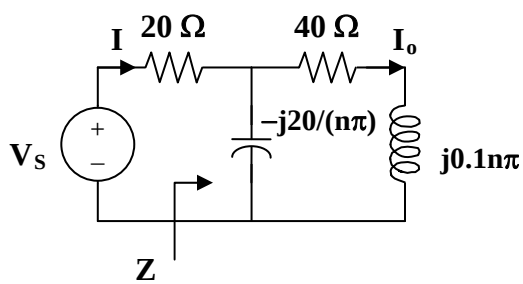

$$\text{Let } Z = -j20/(n\pi)||(40 + j0.1n\pi) = \frac{-\frac{j20}{n\pi}(40 + j0.1n\pi)}{-\frac{j20}{n\pi} + 40 + j0.1n\pi}$$

$$= \frac{-j20(40 + j0.1n\pi}{-j20 + 40n\pi + j0.1n^2\pi^2} = \frac{2n\pi - j800}{40n\pi + j(0.1n^2\pi^2 - 20)}$$

$$Z_{in} = 20 + Z = \frac{802n\pi + j(2n^2\pi^2 - 1200)}{40n\pi + j(0.1n^2\pi^2 - 20)}$$

$$I = \frac{V_s}{Z_{in}} = \frac{400n\pi + j(n^2\pi^2 - 200)}{n\pi[802n\pi + j(2n^2\pi^2 - 1200)]}$$

$$I_o = \frac{-\frac{j20}{n\pi}I}{-\frac{j20}{n\pi} + (40 + j0.1n\pi)} = \frac{-j20I}{40n\pi + j(0.1n^2\pi^2 - 20)}$$

www.konkur.in

$$= \frac{-\ j200}{n\pi[802n\pi + j(2n^2\pi^2 - 1200)]}$$

$$= \frac{200\angle -90° - \tan^{-1}\{(2n^2\pi^2 - 1200)/(802n\pi)\}}{n\pi\sqrt{(802)^2 + (2n^2\pi^2 - 1200)^2}}$$

Thus

$$i_o(t) = \frac{1}{20} + \frac{200}{\pi}\sum_{k=1}^{\infty} I_n \sin(n\pi t - \theta_n), \qquad n = 2k - 1$$

where $$\theta_n = 90° + \tan^{-1}\frac{2n^2\pi^2 - 1200}{802n\pi}$$

$$I_n = \frac{1}{n\sqrt{(804n\pi)^2 + (2n^2\pi^2 - 1200)}}$$

www.konkur.in

Chapter 17, Solution 40.

$T = 2,\ \omega_o = 2\pi/T = \pi$

$$a_o = \frac{1}{T}\int_0^T v(t)dt = \frac{1}{2}\int_0^1 (2-2t)dt = \left[t - \frac{t^2}{2}\right]_0^1 = 1/2$$

$$a_n = \frac{2}{T}\int_0^T v(t)\cos(n\pi t)dt = \int_0^1 2(1-t)\cos(n\pi t)dt$$

$$= 2\left[\frac{1}{n\pi}\sin(n\pi t) - \frac{1}{n^2\pi^2}\cos(n\pi t) - \frac{t}{n\pi}\sin(n\pi t)\right]_0^1$$

$$= \frac{2}{n^2\pi^2}(1-\cos n\pi) = \begin{cases} 0, & n = \text{even} \\ \dfrac{4}{n^2\pi^2}, & n = \text{odd} \end{cases} = \frac{4}{\pi^2(2n-1)^2}$$

$$b_n = \frac{2}{T}\int_0^T v(t)\sin(n\pi t)dt = 2\int_0^1 (1-t)\sin(n\pi t)dt$$

$$= 2\left[-\frac{1}{n\pi}\cos(n\pi t) - \frac{1}{n^2\pi^2}\sin(n\pi t) + \frac{t}{n\pi}\cos(n\pi t)\right]_0^1 = \frac{2}{n\pi}$$

$$v_s(t) = \frac{1}{2} + \sum A_n\cos(n\pi t - \varphi_n)$$

$$\text{where } \phi_n = \tan^{-1}\frac{\pi(2n-1)^2}{2n},\quad A_n = \sqrt{\frac{4}{n^2\pi^2} + \frac{16}{\pi^4(2n-1)^4}}$$

For the DC component, $v_s = 1/2$. As shown in Figure (a), the capacitor acts like an open circuit.

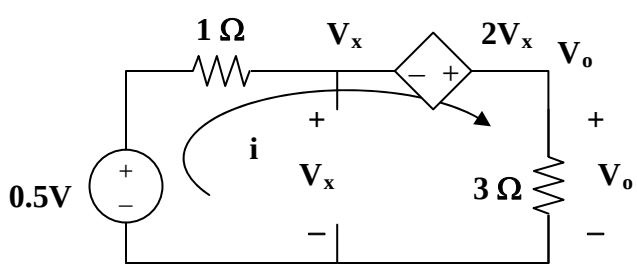

(a)

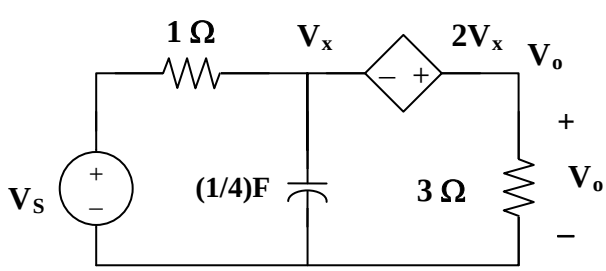

(b)

www.konkur.in

Applying KVL to the circuit in Figure (a) gives

$$-0.5 - 2V_x + 4i = 0 \qquad (1)$$

But $\quad -0.5 + i + V_x = 0$ or $-1 + 2V_x + 2i = 0 \qquad (2)$

Adding (1) and (2), $\quad -1.5 + 6i = 0$ or $i = 0.25$

$$V_o = 3i = 0.75$$

For the nth harmonic, we consider the circuit in Figure (b).

$$\omega_n = n\pi,\ V_s = A_n\angle{-\phi},\ 1/(j\omega_n C) = -j4/(n\pi)$$

At the supernode,

$$(V_s - V_x)/1 = -[n\pi/(j4)]V_x + V_o/3$$

$$V_s = [1 + jn\pi/4]V_x + V_o/3 \qquad (3)$$

But $\quad -V_x - 2V_x + V_o = 0$ or $V_o = 3V_x$

Substituting this into (3),

$$V_s = [1 + jn\pi/4]V_x + V_x = [2 + jn\pi/4]V_x$$

$$= (1/3)[2 + jn\pi/4]V_o = (1/12)[8 + jn\pi]V_o$$

$$V_o = 12V_s/(8 + jn\pi) = \frac{12A_n\angle-\phi}{\sqrt{64+n^2\pi^2}\angle\tan^{-1}(n\pi/8)}$$

$$V_o = \frac{12}{\sqrt{64+n^2\pi^2}}\sqrt{\frac{4}{n^2\pi^2}+\frac{16}{\pi^4(2n-1)^4}}\angle[\tan^{-1}(n\pi/8) - \tan^{-1}(\pi(2n-1)/(2n))]$$

Thus

$$v_o(t) = \mathbf{\frac{3}{4} + \sum_{n=1}^{\infty} V_n \cos(n\pi t + \theta_n)\ volts}$$

where

$$V_n = \mathbf{\frac{12}{\sqrt{64+n^2\pi^2}}\sqrt{\frac{4}{n^2\pi^2}+\frac{16}{\pi^4(2n-1)^4}}} \text{ and}$$

$$\theta_n = \mathbf{\tan^{-1}(n\pi/8) - \tan^{-1}(\pi(2n-1)/(2n))}$$

www.konkur.in

Chapter 17, Solution 41.

For the full wave rectifier,

$$T = \pi,\ \omega_o = 2\pi/T = 2,\ \omega_n = n\omega_o = 2n$$

Hence

$$v_{in}(t) = \left[\frac{2}{\pi} - \frac{4}{\pi}\sum_{n=1}^{\infty}\frac{1}{4n^2-1}\cos(2nt)\right] volts$$

For the DC component,

$$V_{in} = 2/\pi$$

The inductor acts like a short-circuit, while the capacitor acts like an open circuit.

$$V_o = V_{in} = 2/\pi$$

For the nth harmonic,

$$V_{in} = [-4/(\pi(4n^2-1))]\angle 0°$$
$$2\text{ H becomes } j\omega_n L = j4n$$
$$0.1\text{ F becomes } 1/(j\omega_n C) = -j5/n$$
$$Z = 10\|(-j5/n) = -j10/(2n-j)$$
$$V_o = [Z/(Z+j4n)]V_{in} = -j10V_{in}/(4+j(8n-10))$$
$$= -\frac{j10}{4+j(8n-10)}\left(-\frac{4\angle 0°}{\pi(4n^2-1)}\right)$$
$$= \frac{40\angle\{90° - \tan^{-1}(2n-2.5)\}}{\pi(4n^2-1)\sqrt{16+(8n-10)^2}}$$

Hence

$$v_o(t) = \left[\frac{2}{\pi} + \sum_{n=1}^{\infty} A_n \cos(2nt+\theta_n)\right] \text{volts}$$

where

$$A_n = \frac{20}{\pi(4n^2-1)\sqrt{16n^2-40n+29}}$$

$$\theta_n = 90° - \tan^{-1}(2n-2.5)$$

www.konkur.in

Chapter 17, Solution 42.

$$v_s = 5 + \frac{20}{\pi}\sum_{k=1}^{\infty}\frac{1}{n}\sin n\pi t,\ \ n = 2k - 1$$

$$\frac{V_s - 0}{R} = j\omega_n C(0 - V_o) \quad \longrightarrow \quad V_o = \frac{j}{\omega_n RC}V_s,\ \ \omega_n = n\omega_o = n\pi$$

For n = 0 (dc component), V_o=0.

For the nth harmonic,

$$V_o = \frac{1\angle 90^o}{n\pi RC}\frac{20}{n\pi}\angle -90^o = \frac{20}{n^2\pi^2 x10^4 x40x10^{-9}} = \frac{10^5}{2n^2\pi^2}$$

Hence,

$$\mathbf{v_o(t) = \frac{10^5}{2\pi^2}\sum_{k=1}^{\infty}\frac{1}{n^2}\cos n\pi t,\ \ n = 2k - 1}$$

Alternatively, we notice that this is an integrator so that

$$\mathbf{v_o(t) = -\frac{1}{RC}\int v_s dt = \frac{10^5}{2\pi^2}\sum_{k=1}^{\infty}\frac{1}{n^2}\cos n\pi t,\ \ n = 2k - 1}$$

www.konkur.in

Chapter 17, Solution 43.

(a) $$V_{rms} = \sqrt{a_0^2 + \frac{1}{2}\sum_{n=1}^{\infty}(a_n^2 + b_n^2)} = \sqrt{30^2 + \frac{1}{2}(20^2 + 10^2)} = \mathbf{33.91\ V}$$

(b) $$I_{rms} = \sqrt{6^2 + \frac{1}{2}(4^2 + 2^2)} = \mathbf{6.782\ A}$$

(c) $$P = V_{dc}I_{dc} + \frac{1}{2}\sum V_n I_n \cos(\Theta_n - \Phi_n)$$

$$= 30x6 + 0.5[20x4\cos(45^o\text{-}10^o) - 10x2\cos(\text{-}45^o\text{+}60^o)]$$

$$= 180 + 32.76 - 9.659 = \mathbf{203.1\ W}$$

www.konkur.in

Chapter 17, Solution 44.

Design a problem to help other students to better understand how to find the rms voltage across and the rms current through an electrical element given a Fourier series for both the current and the voltage. In addition, have them calculate the average power delivered to the element and the power spectrum.

Although there are many ways to solve this problem, this is an example based on the same kind of problem asked in the third edition.

Problem

The voltage and current through an element are respectively

$v(t) = [30 \cos (t + 35°) + 10\cos(2t - 55^\circ) + 4 \cos(3t - 10°)]$ V

$i(t) = [2 \cos (t - 10^\circ) + \cos(2t - 10°)]$ A

(a) Find the average power delivered to the element
(b) Plot the power spectrum.

Solution

(a) $$p = vi = \frac{1}{2}\left[60\cos(-25^\circ) + 10\cos 45^\circ + 0\right] = 27.19 + 3.536 = \mathbf{30.73\ W}.$$

(b) The power spectrum is shown below.

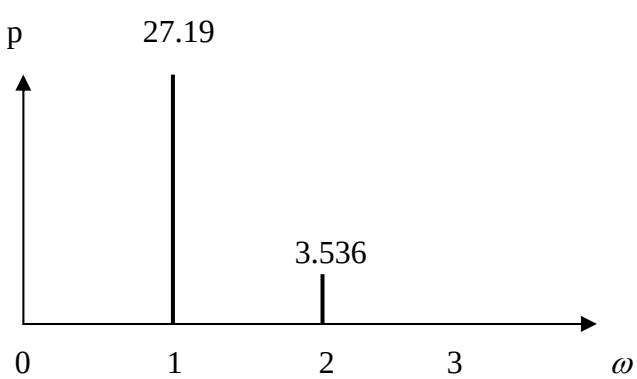

www.konkur.in

Chapter 17, Solution 45.

$\omega_n = 1000n$

$j\omega_n L = j1000nx2x10^{-3} = j2n$

$1/(j\omega_n C) = -j/(1000nx40x10^{-6}) = -j25/n$

$Z = R + j\omega_n L + 1/(j\omega_n C) = 10 + j2n - j25/n$

$I = V/Z$

For $n = 1$, $V_1 = 100$, $Z = 10 + j2 - j25 = 10 - j23$

$I_1 = 100/(10 - j23) = 3.987\angle 73.89°$

For $n = 2$, $V_2 = 50$, $Z = 10 + j4 - j12.5 = 10 - j8.5$

$I_2 = 50/(10 - j8.5) = 3.81\angle 40.36°$

For $n = 3$, $V_3 = 25$, $Z = 10 + j6 - j25/3 = 10 - j2.333$

$I_3 = 25/(10 - j2.333) = 2.435\angle 13.13°$

$I_{rms} = \sqrt{0.5(3.987^2 + 3.81^2 + 2.435^2)} = \mathbf{4.263\ A}$

$p = R(I_{rms})^2 = \mathbf{181.7W}$

www.konkur.in

Chapter 17, Solution 46.

(a)The MATLAB commands are:

```
t=0:0.01:5;
y=5*cos(3*t) – 2*cos(3*t-pi/3);
plot(t,y)
```

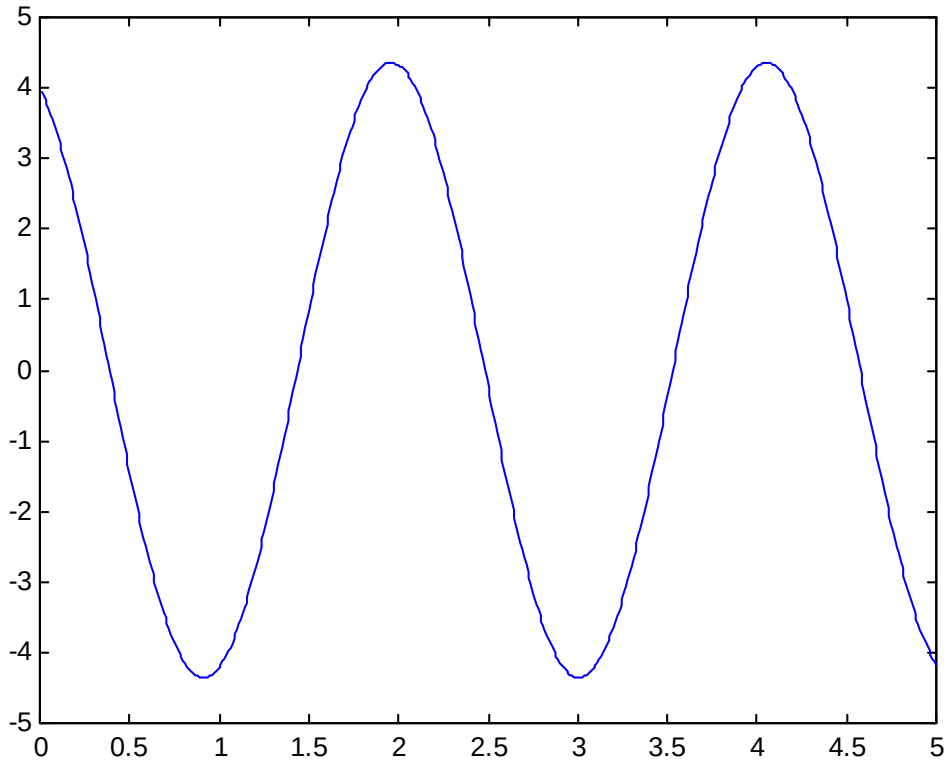

(b) The MATLAB commands are:

```
t=0:0.01:5;
» x=8*sin(pi*t+pi/4)+10*cos(pi*t-pi/8);
» plot(t,x)
» plot(t,x)
```

www.konkur.in

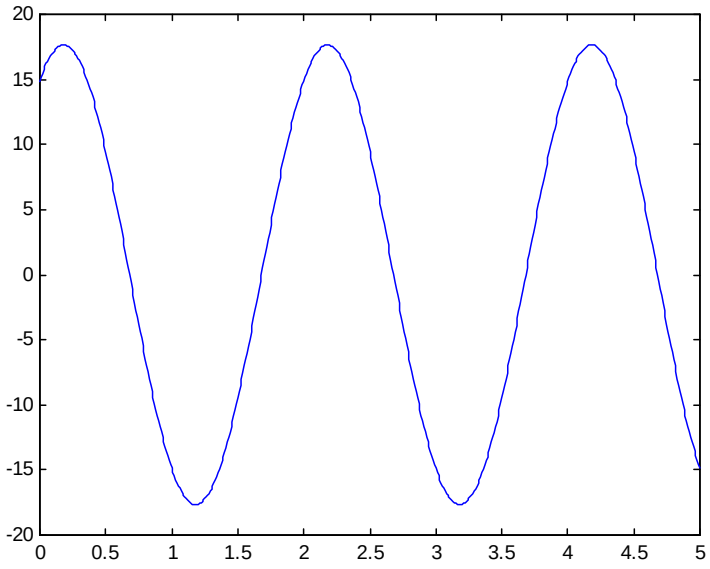

www.konkur.in

Chapter 17, Solution 47.

$$T = 2, \qquad \omega_o = 2\pi / T = \pi$$

$$a_o = \frac{1}{T}\int_0^T f(t)dt = \frac{1}{2}\left[\int_0^1 4\,dt + \int_1^2 (-2)dt\right] = \frac{1}{2}(4-2) = 1$$

$$P = Ri_{rms}^2 = \frac{R}{T}\int_0^T f^2(t)dt = \frac{R}{2}\left[\int_0^1 4^2\,dt + \int_1^2 (-2)^2\,dt\right] = 10R$$

The average power dissipation caused by the dc component is

$$P_0 = Ra_o^2 = R = \underline{10\%} \text{ of P}$$

www.konkur.in

Chapter 17, Solution 48.

(a) For the DC component, i(t) = 20 mA. The capacitor acts like an open circuit so that

$$v = Ri(t) = 2x10^3x20x10^{-3} = 40$$

For the AC component,

$$\omega_n = 10n, \; n = 1,2$$

$$1/(j\omega_n C) = -j/(10nx100x10^{-6}) = (-j/n)\ k\Omega$$

$$Z = 2||(-j/n) = 2(-j/n)/(2 - j/n) = -j2/(2n - j)$$

$$V = ZI = [-j2/(2n - j)]I$$

For n = 1, $V_1 = [-j2/(2 - j)]16\angle 45° = 14.311\angle -18.43°$ mV

For n = 2, $V_2 = [-j2/(4 - j)]12\angle -60° = 5.821\angle -135.96°$ mV

$$v(t) = \mathbf{40 + 0.014311cos(10t - 18.43°) + 0.005821cos(20t - 135.96°)\ V}$$

(b) $$p = V_{DC}I_{DC} + \frac{1}{2}\sum_{n=1}^{\infty} V_n I_n \cos(\theta_n - \phi_n)$$

$$= 20x40 + 0.5x10x0.014311cos(45° + 18.43°) + 0.5x12x0.005821cos(-60° + 135.96°)$$

$$= \mathbf{800.1\ mW}$$

www.konkur.in

Chapter 17, Solution 49.

(a) $$Z^2{}_{rms} = \frac{1}{T}\int_0^T z^2(t)dt = \frac{1}{2\pi}\left[\int_0^{\pi} 4dt + \int_{\pi}^{2\pi} 16dt\right] = \frac{1}{2\pi}(20\pi) = 10$$

Z_{rms} = **3.162**

(b)

$$Z^2{}_{rms} = a_0^2 + \frac{1}{2}\sum_{n=1}^{\infty}(a_n^2 + b_n^2) = 1 + \frac{1}{2}\sum_{\substack{n=1\\ n=odd}}^{\infty}\frac{144}{n^2\pi^2} = 1 + \frac{72}{\pi^2}\left(1 + 0 + \frac{1}{9} + 0 + \frac{1}{25} + \ldots\right) = 9.396$$

Z_{rms} = **3.065**

(c) $$\%\text{error} = \left(1 - \frac{3.065}{3.162}\right)x100 = \mathbf{3.068\%}$$

www.konkur.in

Chapter 17, Solution 50.

$$c_n = \frac{1}{T}\int_0^T f(t)e^{-j\omega_o nt}dt, \qquad \omega_o = \frac{2n}{1} = \pi$$

$$= \frac{1}{2}\int_{-}^{1} te^{-jn\pi t}dt$$

Using integration by parts,

$$u = t \text{ and } du = dt$$

$$dv = e^{-jn\pi t}dt \text{ which leads to } v = -[1/(2jn\pi)]e^{-jn\pi t}$$

$$c_n = -\frac{t}{2jn\pi}e^{-jn\pi t}\Big|_{-1}^{1} + \frac{1}{2jn\pi}\int_{-1}^{1} e^{-jn\pi t}dt$$

$$= \frac{j}{n\pi}\left[e^{-jn\pi} + e^{jn\pi t}\right] + \frac{1}{2n^2\pi^2(-j)^2}e^{-jn\pi t}\Big|_{-1}^{1}$$

$$= [j/(n\pi)]\cos(n\pi) + [1/(2n^2\pi^2)](e^{-jn\pi} - e^{jn\pi})$$

$$c_n = \frac{j(-1)^n}{n\pi} + \frac{2j}{2n^2\pi^2}\sin(n\pi) = \frac{j(-1)^n}{n\pi}$$

Thus

$$f(t) = \sum_{n=-\infty}^{\infty} \mathbf{c_n e^{jn\omega_o t}} = \sum_{n=-\infty}^{\infty} \mathbf{(-1)^n \frac{j}{n\pi} e^{jn\pi t}}$$

www.konkur.in

Chapter 17, Solution 51.

Design a problem to help other students to better understand how to find the exponential Fourier series of a given periodic function.

Although there are many ways to solve this problem, this is an example based on the same kind of problem asked in the third edition.

Problem

Given the periodic function

$$f(t) = t^2, \qquad 0 < t < T$$

obtain the exponential Fourier series for the special case $T = 2$.

Solution

$$T = 2, \qquad \omega_o = 2\pi / T = \pi$$

$$c_n = \frac{1}{T}\int_0^T f(t)e^{-jn\omega_o t}dt = \frac{1}{2}\int_0^2 t^2 e^{-jn\pi t}dt = \frac{1}{2}\frac{e^{-jn\pi t}}{(-jn\pi)^3}\left(-n^2\pi^2 t^2 + 2jn\pi t + 2\right)\Big|_0^2$$

$$c_n = \frac{1}{j2n^3\pi^3}(-4n^2\pi^2 + j4n\pi) = \frac{2}{n^2\pi^2}(1 + jn\pi)$$

$$\underline{\mathbf{f(t) = \sum_{n=-\infty}^{\infty} \frac{2}{n^2\pi^2}(1 + jn\pi)e^{jn\pi t}}}$$

www.konkur.in

Chapter 17, Solution 52.

$$c_n = \frac{1}{T}\int_0^T f(t)e^{-j\omega_o nt}dt, \qquad \omega_o = \frac{2n}{1} = \pi$$

$$= \frac{1}{2}\int_{-}^{1} te^{-jn\pi t}dt$$

Using integration by parts,

$$u = t \text{ and } du = dt$$

$$dv = e^{-jn\pi t}dt \text{ which leads to } v = -[1/(2jn\pi)]e^{-jn\pi t}$$

$$c_n = -\frac{t}{2jn\pi}e^{-jn\pi t}\Big|_{-1}^{1} + \frac{1}{2jn\pi}\int_{-1}^{1} e^{-jn\pi t}dt$$

$$= \frac{j}{n\pi}\left[e^{-jn\pi} + e^{jn\pi t}\right] + \frac{1}{2n^2\pi^2(-j)^2}e^{-jn\pi t}\Big|_{-1}^{1}$$

$$= [j/(n\pi)]\cos(n\pi) + [1/(2n^2\pi^2)](e^{-jn\pi} - e^{jn\pi})$$

$$c_n = \frac{j(-1)^n}{n\pi} + \frac{2j}{2n^2\pi^2}\sin(n\pi) = \frac{j(-1)^n}{n\pi}$$

Thus

$$f(t) = \sum_{n=-\infty}^{\infty} c_n e^{jn\omega_o t} = \boldsymbol{\sum_{n=-\infty}^{\infty}(-1)^n \frac{j}{n\pi} e^{jn\pi t}}$$

www.konkur.in

Chapter 17, Solution 53.

$$\omega_o = 2\pi/T = 2\pi$$

$$c_n = \int_0^T e^{-t} e^{-jn\omega_o t} dt = \int_0^1 e^{-(1+jn\omega_o)t} dt$$

$$= \frac{-1}{1 + j2\pi n} e^{-(1+j2n\pi)t}\Big|_0^1 = \frac{-1}{1 + j2n\pi}\left[e^{-(1+j2n\pi)} - 1\right]$$

$$= [1/(j2n\pi)][1 - e^{-1}(\cos(2\pi n) - j\sin(2n\pi))]$$

$$= (1 - e^{-1})/(1 + j2n\pi) = 0.6321/(1 + j2n\pi$$

$$f(t) = \sum_{n=-\infty}^{\infty} \frac{\mathbf{0.6321e^{j2n\pi t}}}{\mathbf{1 + j2n\pi}}$$

www.konkur.in

Chapter 17, Solution 54.

$$T = 4, \quad \omega_o = 2\pi/T = \pi/2$$

$$c_n = \frac{1}{T}\int_0^T f(t)e^{-j\omega_o nt}dt$$

$$= \frac{1}{4}\left[\int_0^1 2e^{-jn\pi t/2}dt + \int_1^2 1e^{-jn\pi t/2}dt - \int_2^4 1e^{-jn\pi t/2}dt\right]$$

$$= \frac{j}{2n\pi}\left[2e^{-jn\pi/2} - 2 + e^{-jn\pi} - e^{-jn\pi/2} - e^{-j2n\pi} + e^{-jn\pi}\right]$$

$$= \mathbf{\frac{j}{2n\pi}\left[3e^{-jn\pi/2} - 3 + 2e^{-jn\pi}\right]}$$

$$f(t) = \sum_{n=-\infty}^{\infty} \mathbf{c_n e^{jn\omega_o t}}$$

www.konkur.in

Chapter 17, Solution 55.

$T = 2\pi, \ \omega_o = 2\pi/T = 1$

$$c_n = \frac{1}{T}\int_0^T i(t)e^{-jn\omega_o t}dt$$

But $$i(t) = \begin{cases} \sin(t), & 0 < t < \pi \\ 0, & \pi < t < 2\pi \end{cases}$$

$$c_n = \frac{1}{2\pi}\int_0^{\pi}\sin(t)e^{-jnt}dt = \frac{1}{2\pi}\int_0^{\pi}\frac{1}{2j}(e^{jt} - e^{-jt})e^{-jnt}dt$$

$$= \frac{1}{4\pi j}\left[\frac{e^{jt(1-n)}}{j(1-n)} + \frac{e^{-jt(1+n)}}{j(1+n)}\right]_0^{\pi}$$

$$= -\frac{1}{4\pi}\left[\frac{e^{j\pi(1-n)} - 1}{1-n} + \frac{e^{-j\pi(n+1)} - 1}{1+n}\right]$$

$$= \frac{1}{4\pi(n^2 - 1)}\left[e^{j\pi(1-n)} - 1 + ne^{j\pi(1-n)} - n + e^{-j\pi(1+n)} - 1 - ne^{-j\pi(1+n)} + n\right]$$

But $e^{j\pi} = \cos(\pi) + j\sin(\pi) = -1 = e^{-j\pi}$

$$c_n = \frac{1}{4\pi(n^2 - 1)}\left[-e^{-jn\pi} - e^{-jn\pi} - ne^{-jn\pi} + ne^{-jn\pi} - 2\right] = \frac{1 + e^{-jn\pi}}{2\pi(1 - n^2)}$$

Thus

$$i(t) = \sum_{n=-\infty}^{\infty}\frac{\mathbf{1 + e^{-jn\pi}}}{\mathbf{2\pi(1 - n^2)}}\mathbf{e^{jnt}}$$

www.konkur.in

Chapter 17, Solution 56.

$c_o = a_o = 10, \ \omega_o = \pi$

$c_o = (a_n - jb_n)/2 = (1 - jn)/[2(n^2 + 1)]$

$$\mathbf{f(t) = 10 + \sum_{\substack{n=-\infty \\ n\neq 0}}^{\infty} \frac{(1-jn)}{2(n^2+1)} e^{jn\pi t}}$$

www.konkur.in

Chapter 17, Solution 57.

$a_o = (6/-2) = -3 = c_o$

$c_n = 0.5(a_n - jb_n) = a_n/2 = 3/(n^3 - 2)$

$$f(t) = -3 + \sum_{\substack{n=-\infty \\ n\neq 0}}^{\infty} \frac{3}{n^3 - 2} e^{j50nt}$$

www.konkur.in

Chapter 17, Solution 58.

$c_n = (a_n - jb_n)/2,\ (-1)^n = \cos(n\pi),\ \omega_o = 2\pi/T = 1$

$c_n = [(\cos(n\pi) - 1)/(2\pi n^2)] - j\cos(n\pi)/(2n)$

Thus

$$f(t) = \frac{\pi}{4} + \sum\left(\frac{\cos(n\pi) - 1}{2\pi n^2} - j\frac{\cos(n\pi)}{2n}\right)e^{jnt}$$

www.konkur.in

Chapter 17, Solution 59.

For f(t), $T = 2\pi$, $\omega_o = 2\pi/T = 1$.

a_o = DC component = $(1x\pi + 0)/2\pi = 0.5$

For h(t), $T = 2$, $\omega_o = 2\pi/T = \pi$.

$a_o = (2x1 - 2x1)/2 = 0$

Thus by replacing $\omega_o = 1$ with $\omega_o = \pi$ and multiplying the magnitude by four, we obtain

$$h(t) = -\sum_{\substack{n=-\infty \\ n\neq 0}}^{\infty} \frac{j4e^{-j(2n+1)\pi t}}{(2n+1)\pi}$$

www.konkur.in

Chapter 17, Solution 60.

From Problem 17.24,

$$a_o = 0 = a_n,\ b_n = [2/(n\pi)][1 - 2\cos(n\pi)],\ c_o = \mathbf{0}$$

$$c_n = (a_n - jb_n)/2 = \mathbf{[j/(n\pi)][2\cos(n\pi) - 1],\ n \neq 0}.$$

www.konkur.in

Chapter 17, Solution 61.

(a) $\omega_o = 1.$

$$f(t) = a_o + \sum A_n \cos(n\omega_o t - \phi_n)$$

$$= 6 + 4\cos(t + 50°) + 2\cos(2t + 35°) + \cos(3t + 25°) + 0.5\cos(4t + 20°)$$

$$= 6 + 4\cos(t)\cos(50°) - 4\sin(t)\sin(50°) + 2\cos(2t)\cos(35°) - 2\sin(2t)\sin(35°) + \cos(3t)\cos(25°) - \sin(3t)\sin(25°) + 0.5\cos(4t)\cos(20°) - 0.5\sin(4t)\sin(20°)$$

$$= \mathbf{6 + 2.571\cos(t) - 3.73\sin(t) + 1.635\cos(2t) - 1.147\sin(2t) + 0.906\cos(3t) - 0.423\sin(3t) + 0.47\cos(4t) - 0.171\sin(4t)}$$

(b) $$f_{rms} = \sqrt{a_o^2 + \frac{1}{2}\sum_{n=1}^{\infty} A_n^2}$$

$$f_{rms}^2 = 6^2 + 0.5[4^2 + 2^2 + 1^2 + (0.5)^2] = 46.625$$

$$f_{rms} = \mathbf{6.828}$$

www.konkur.in

Chapter 17, Solution 62.

(a)

$$f(t) = 12 + 10\cos(2\omega_o t + 90^o) + 8\cos(4\omega_o t - 90^o) + 5\cos(6\omega_o t + 90^o) + 3\cos(8\omega_o t - 90^o)$$

(b) f(t) is an **even** function of t.

www.konkur.in

Chapter 17, Solution 63.

This is an even function.

$T = 3,\ \omega_o = 2\pi/3,\ b_n = 0.$

$$f(t) = \begin{cases} 1, & 0 < t < 1 \\ 2, & 1 < t < 1.5 \end{cases}$$

$$a_o = \frac{2}{T}\int_0^{T/2} f(t)dt = \frac{2}{3}\left[\int_0^1 1dt + \int_1^{1.5} 2\,dt\right] = (2/3)[1 + 1] = 4/3$$

$$a_n = \frac{4}{T}\int_0^{T/2} f(t)\cos(n\omega_o t)dt = \frac{4}{3}\left[\int_0^1 1\cos(2n\pi t/3)dt + \int_1^{1.5} 2\cos(2n\pi t/3)dt\right]$$

$$= \frac{4}{3}\left[\frac{3}{2n\pi}\sin\left(\frac{2n\pi t}{3}\right)\Bigg|_0^1 + \frac{6}{2n\pi}\sin\left(\frac{2n\pi t}{3}\right)\Bigg|_1^{1.5}\right]$$

$$= [-2/(n\pi)]\sin(2n\pi/3)$$

$$f_2(t) = \frac{4}{3} - \frac{2}{\pi}\sum_{n=1}^{\infty}\frac{1}{n}\sin\left(\frac{3n\pi}{3}\right)\cos\left(\frac{2n\pi t}{3}\right)$$

$a_o = 4/3 = 1.3333,\ \ \omega_o = 2\pi/3,\ a_n = -[2/(n\pi)]\sin(2n\pi t/3)$

$$A_n = \sqrt{a_n^2 + b_n^2} = \left|\frac{2}{n\pi}\sin\left(\frac{2n\pi}{3}\right)\right|$$

$A_1 = 0.5513,\ A_2 = 0.2757,\ A_3 = 0,\ A_4 = 0.1375,\ A_5 = 0.1103$

www.konkur.in

The amplitude spectra are shown below.

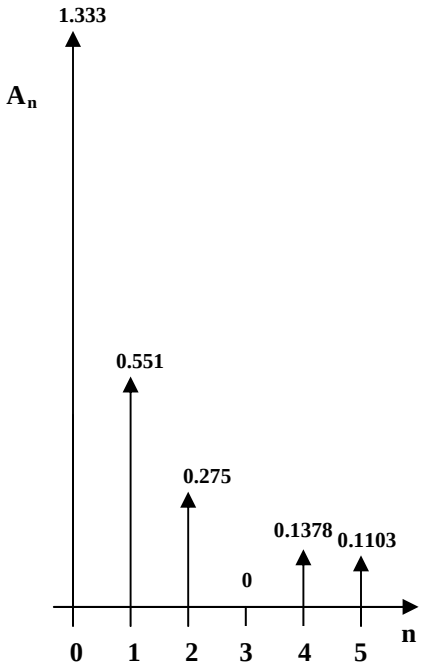

www.konkur.in

Chapter 17, Solution 64.

Design a problem to help other students to better understand the amplitude and phase spectra of a given Fourier series.

Although there are many ways to solve this problem, this is an example based on the same kind of problem asked in the third edition.

Problem

Given that

$$v(t) = (10/\pi)[1 + (1/2)\cos(2\pi t) + (2/3)\cos(4\pi t) - (2/15)\cos(6\pi t)] \text{ V}$$

draw the amplitude and phase spectra for $v(t)$.

Solution

The amplitude and phase spectra are shown below.

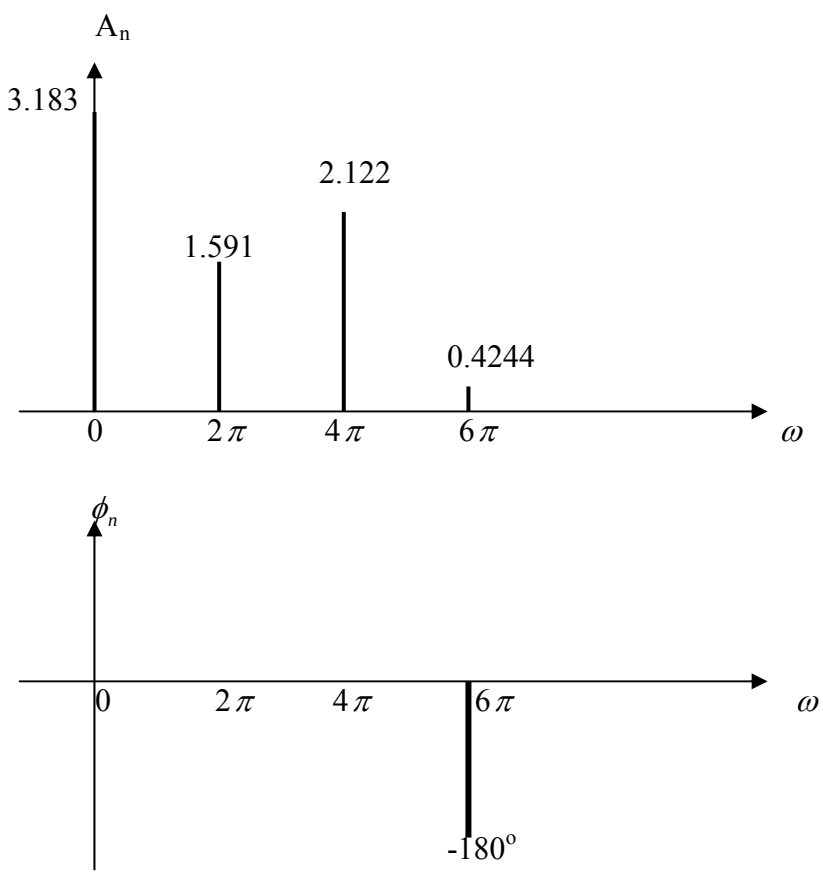

www.konkur.in

Chapter 17, Solution 65.

$a_n = 20/(n^2\pi^2)$, $b_n = -3/(n\pi)$, $\omega_n = 2n$

$$A_n = \sqrt{a_n^2 + b_n^2} = \sqrt{\frac{400}{n^4\pi^4} + \frac{9}{n^2\pi^2}}$$

$$= \frac{3}{n\pi}\sqrt{1 + \frac{44.44}{n^2\pi^2}}, \quad n = 1, 3, 5, 7, 9, \text{ etc.}$$

n	A_n
1	2.24
3	0.39
5	0.208
7	0.143
9	0.109

$$\phi_n = \tan^{-1}(b_n/a_n) = \tan^{-1}\{[-3/(n\pi)][n^2\pi^2/20]\} = \tan^{-1}(-nx0.4712)$$

n	ϕ_n
1	–25.23°
3	–54.73°
5	–67°
7	–73.14°
9	–76.74°
∞	–90°

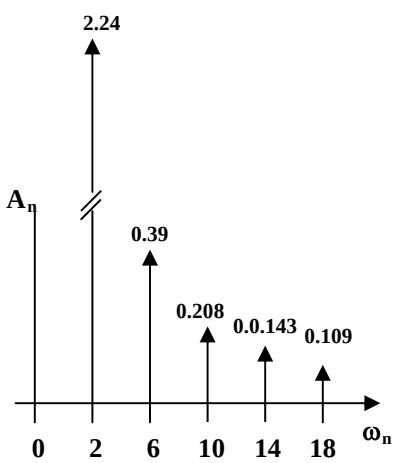

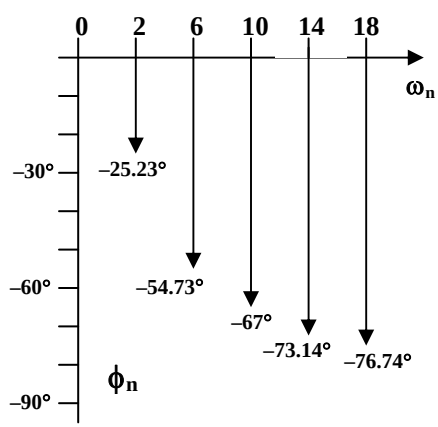

www.konkur.in

Chapter 17, Solution 66.

The schematic is shown below. The waveform is inputted using the attributes of VPULSE. In the Transient dialog box, we enter Print Step = 0.05, Final Time = 12, Center Frequency = 0.5, Output Vars = V(1) and click enable Fourier. After simulation, the output plot is shown below. The output file includes the following Fourier components.

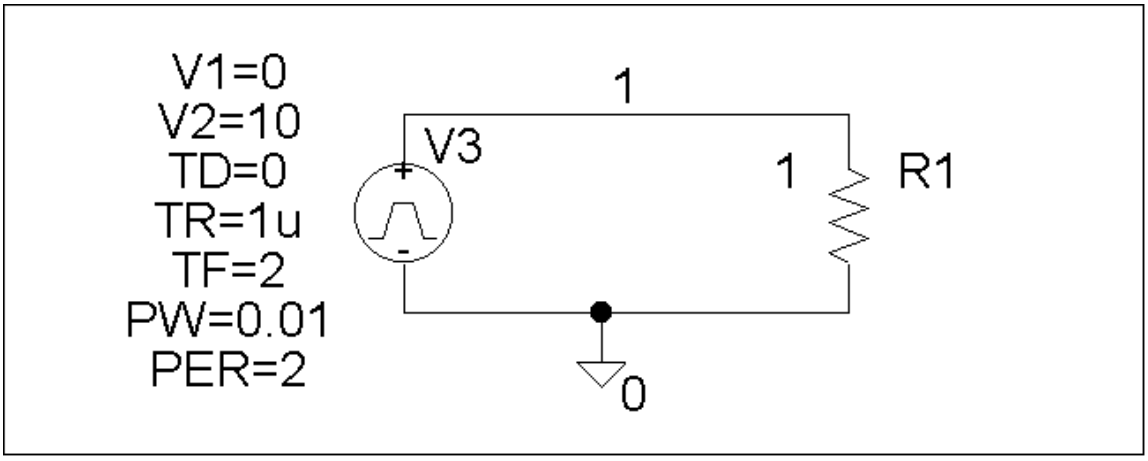

FOURIER COMPONENTS OF TRANSIENT RESPONSE V(1)

DC COMPONENT = 5.099510E+00

HARMONIC NO	FREQUENCY (HZ)	FOURIER COMPONENT	NORMALIZED COMPONENT	PHASE (DEG)	NORMALIZED PHASE (DEG)
1	5.000E-01	3.184E+00	1.000E+00	1.782E+00	0.000E+00
2	1.000E+00	1.593E+00	5.002E-01	3.564E+00	1.782E+00
3	1.500E+00	1.063E+00	3.338E-01	5.347E+00	3.564E+00
4	2.000E+00	7.978E-01	2.506E-01	7.129E+00	5.347E+00
5	2.500E+00	6.392E-01	2.008E-01	8.911E+00	7.129E+00
6	3.000E+00	5.336E-01	1.676E-01	1.069E+01	8.911E+00
7	3.500E+00	4.583E-01	1.440E-01	1.248E+01	1.069E+01
8	4.000E+00	4.020E-01	1.263E-01	1.426E+01	1.248E+01
9	4.500E+00	3.583E-01	1.126E-01	1.604E+01	1.426E+01

TOTAL HARMONIC DISTORTION = 7.363360E+01 PERCENT

From Prob. 17.4, we know the phase angle should be zero. Why do we have a phase angle equal to n(1.782)? The answer is actually quite straight forward. ***The angle comes from the approximation of the leading edge of the pulse. The graph shows an instantaneous rise whereas PSpice needs a finite rise time, thus artificially creating a phase shift.***

www.konkur.in

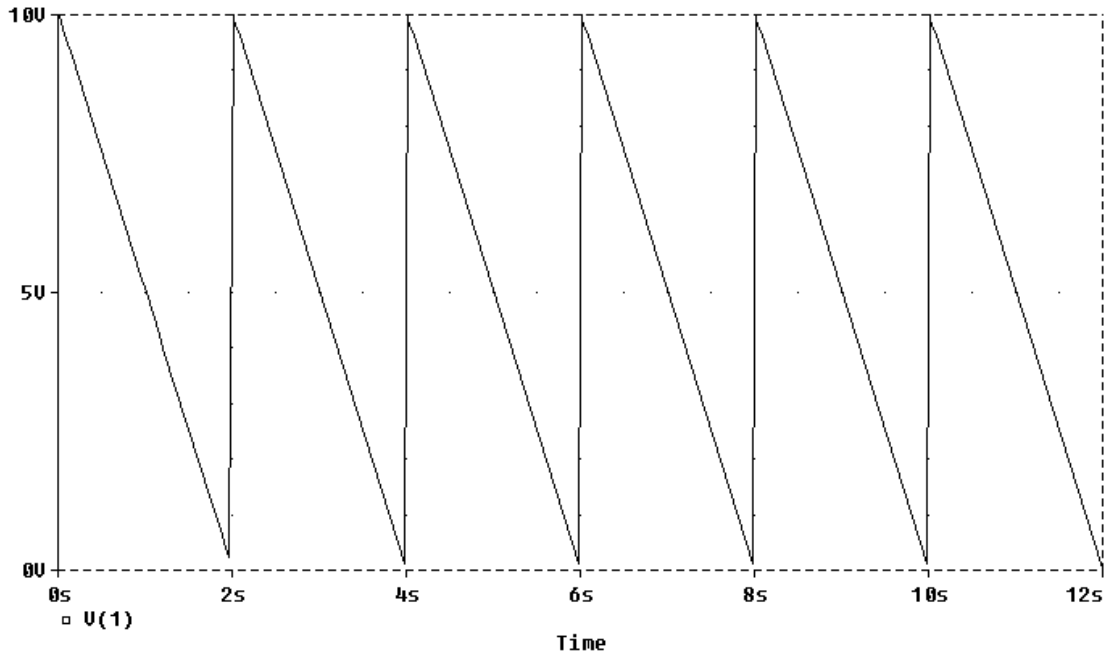

www.konkur.in

Chapter 17, Solution 67.

The Schematic is shown below. In the Transient dialog box, we type "Print step = 0.01s, Final time = 36s, Center frequency = 0.1667, Output vars = v(1)," and click Enable Fourier. After simulation, the output file includes the following Fourier components,

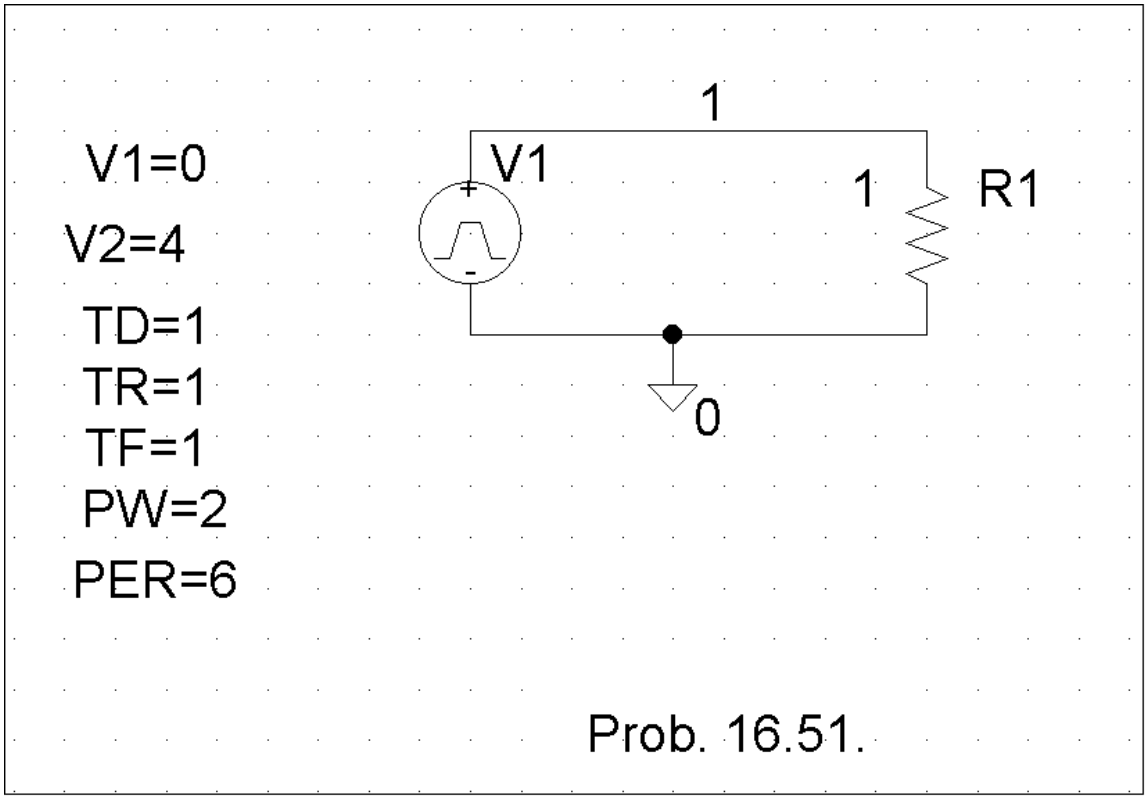

FOURIER COMPONENTS OF TRANSIENT RESPONSE V(1)

DC COMPONENT = 2.000396E+00

HARMONIC NO	FREQUENCY (HZ)	FOURIER COMPONENT	NORMALIZED COMPONENT	PHASE (DEG)	NORMALIZED PHASE (DEG)
1	1.667E-01	2.432E+00	1.000E+00	-8.996E+01	0.000E+00
2	3.334E-01	6.576E-04	2.705E-04	-8.932E+01	6.467E-01
3	5.001E-01	5.403E-01	2.222E-01	9.011E+01	1.801E+02
4	6.668E-01	3.343E-04	1.375E-04	9.134E+01	1.813E+02
5	8.335E-01	9.716E-02	3.996E-02	-8.982E+01	1.433E-01
6	1.000E+00	7.481E-06	3.076E-06	-9.000E+01	-3.581E-02
7	1.167E+00	4.968E-02	2.043E-02	-8.975E+01	2.173E-01
8	1.334E+00	1.613E-04	6.634E-05	-8.722E+01	2.748E+00
9	1.500E+00	6.002E-02	2.468E-02	9.032E+01	1.803E+02

TOTAL HARMONIC DISTORTION = 2.280065E+01 PERCENT

www.konkur.in

Chapter 17, Solution 68.

Since T=3, f =1/3 = 0.333 Hz. We use the schematic below.

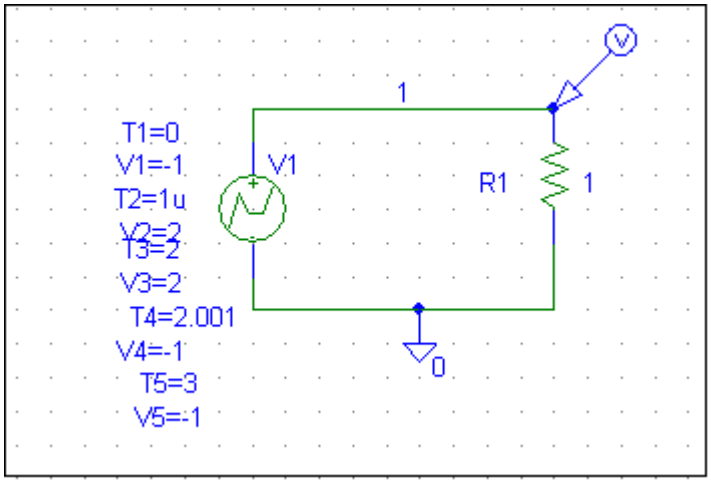

We use VPWL to enter in the signal as shown. In the transient dialog box, we enable Fourier, select 15 for Final Time, 0.01s for Print Step, and 10ms for the Step Ceiling. When the file is saved and run, we obtain the Fourier coefficients as part of the output file as shown below.

Why is this problem wrong? Clearly the source is not periodic. The DC value must be +1!!!!!!!!!!

FOURIER COMPONENTS OF TRANSIENT RESPONSE V(1)

DC COMPONENT = -1.000000E+00

HARMONIC NO	FREQUENCY (HZ)	FOURIER COMPONENT	NORMALIZED COMPONENT	PHASE (DEG)	NORMALIZED PHASE (DEG)
1	3.330E-01	1.615E-16	1.000E+00	1.762E+02	0.000E+00
2	6.660E-01	5.133E-17	3.179E-01	2.999E+01	-3.224E+02
3	9.990E-01	6.243E-16	3.867E+00	6.687E+01	-4.617E+02
4	1.332E+00	1.869E-16	1.158E+00	7.806E+01	-6.267E+02
5	1.665E+00	6.806E-17	4.215E-01	1.404E+02	-7.406E+02
6	1.998E+00	1.949E-16	1.207E+00	-1.222E+02	-1.179E+03
7	2.331E+00	1.465E-16	9.070E-01	-4.333E+01	-1.277E+03
8	2.664E+00	3.015E-16	1.867E+00	-1.749E+02	-1.584E+03
9	2.997E+00	1.329E-16	8.233E-01	-9.565E+01	-1.681E+03

www.konkur.in

Chapter 17, Solution 69.

The schematic is shown below. In the Transient dialog box, set Print Step = 0.05 s, Final Time = 120, Center Frequency = 0.5, Output Vars = V(1) and click enable Fourier. After simulation, we obtain V(1) as shown below. We also obtain an output file which includes the following Fourier components.

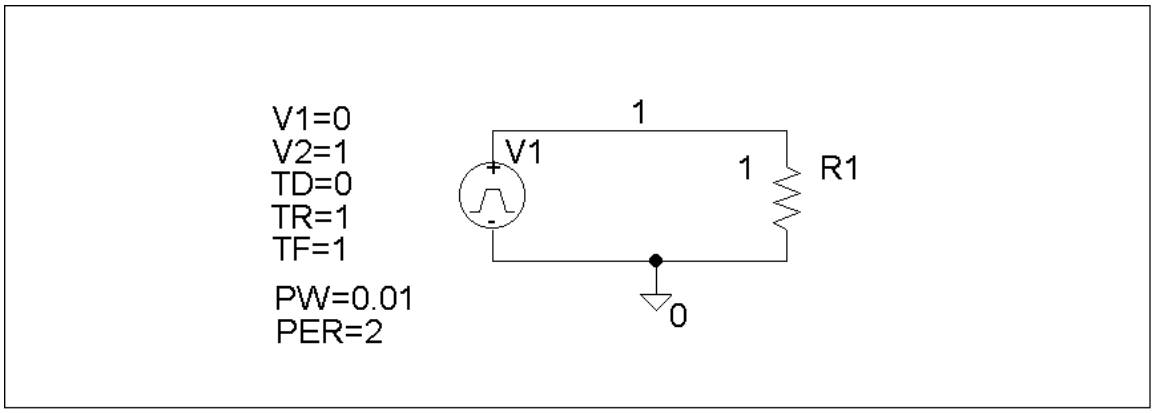

FOURIER COMPONENTS OF TRANSIENT RESPONSE V(1)

DC COMPONENT = 5.048510E-01

HARMONIC NO	FREQUENCY (HZ)	FOURIER COMPONENT	NORMALIZED COMPONENT	PHASE (DEG)	NORMALIZED PHASE (DEG)
1	5.000E-01	4.056E-01	1.000E+00	-9.090E+01	0.000E+00
2	1.000E+00	2.977E-04	7.341E-04	-8.707E+01	3.833E+00
3	1.500E+00	4.531E-02	1.117E-01	-9.266E+01	-1.761E+00
4	2.000E+00	2.969E-04	7.320E-04	-8.414E+01	6.757E+00
5	2.500E+00	1.648E-02	4.064E-02	-9.432E+01	-3.417E+00
6	3.000E+00	2.955E-04	7.285E-04	-8.124E+01	9.659E+00
7	3.500E+00	8.535E-03	2.104E-02	-9.581E+01	-4.911E+00
8	4.000E+00	2.935E-04	7.238E-04	-7.836E+01	1.254E+01
9	4.500E+00	5.258E-03	1.296E-02	-9.710E+01	-6.197E+00

TOTAL HARMONIC DISTORTION = 1.214285E+01 PERCENT

www.konkur.in

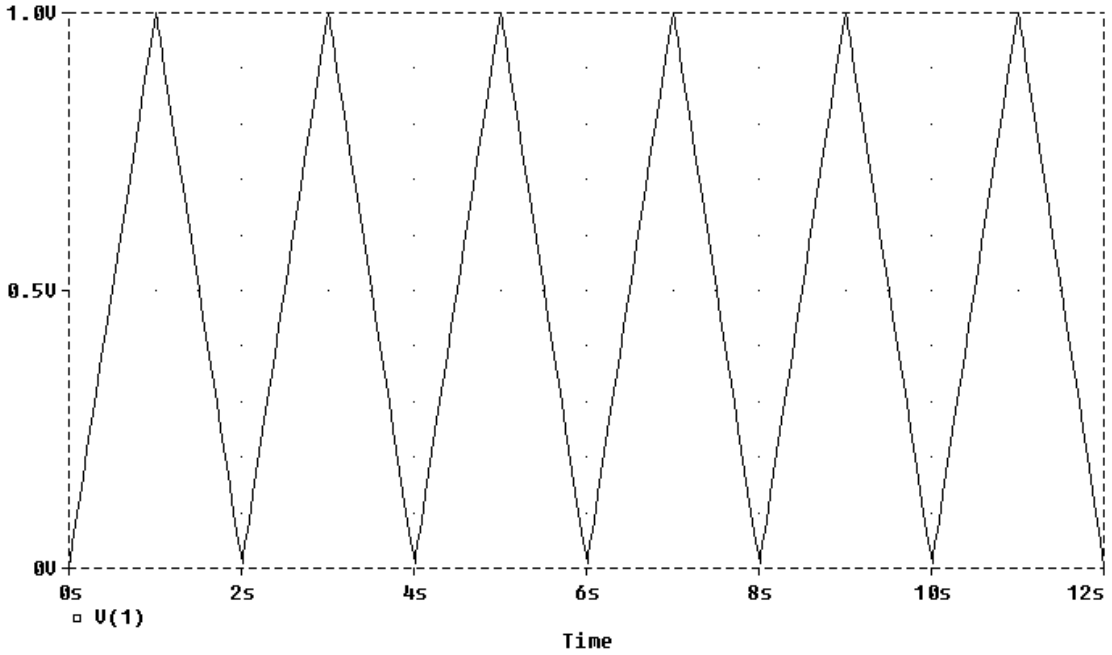

www.konkur.in

Chapter 17, Solution 70.

Design a problem to help other students to better understand how to use *PSpice* to solve circuit problems with periodic inputs.

Although there are many ways to solve this problem, this is an example based on the same kind of problem asked in the third edition.

Problem

Rework Prob. 17.40 using *PSpice*.

Chapter 17, Problem 40.

The signal in Fig. 17.77(a) is applied to the circuit in Fig. 17.77(b). Find $v_o(t)$.

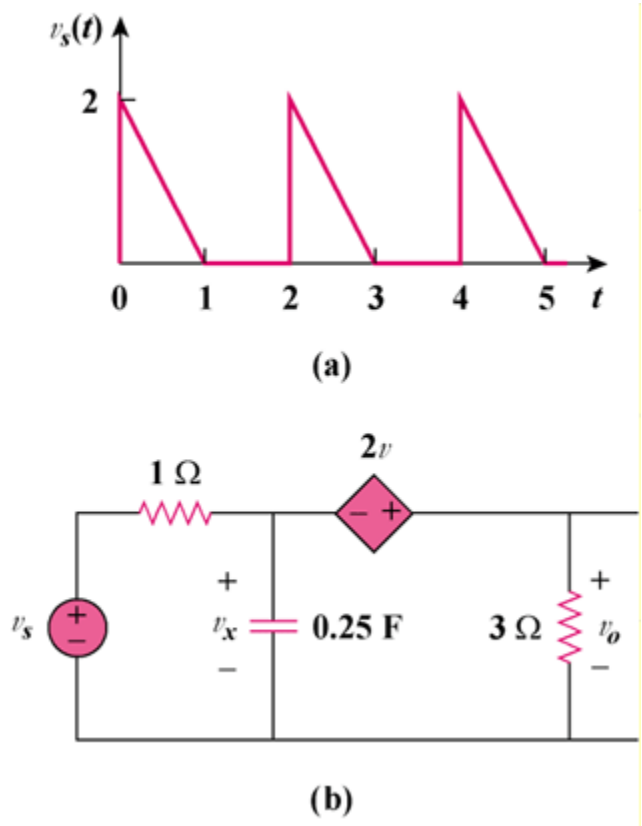

Figure 17.77

Solution

The schematic is shown below. In the Transient dialog box, we set Print Step = 0.02 s, Final Step = 12 s, Center Frequency = 0.5, Output Vars = V(1) and V(2), and click enable Fourier.

After simulation, we compare the output and output waveforms as shown. The output includes the following Fourier components.

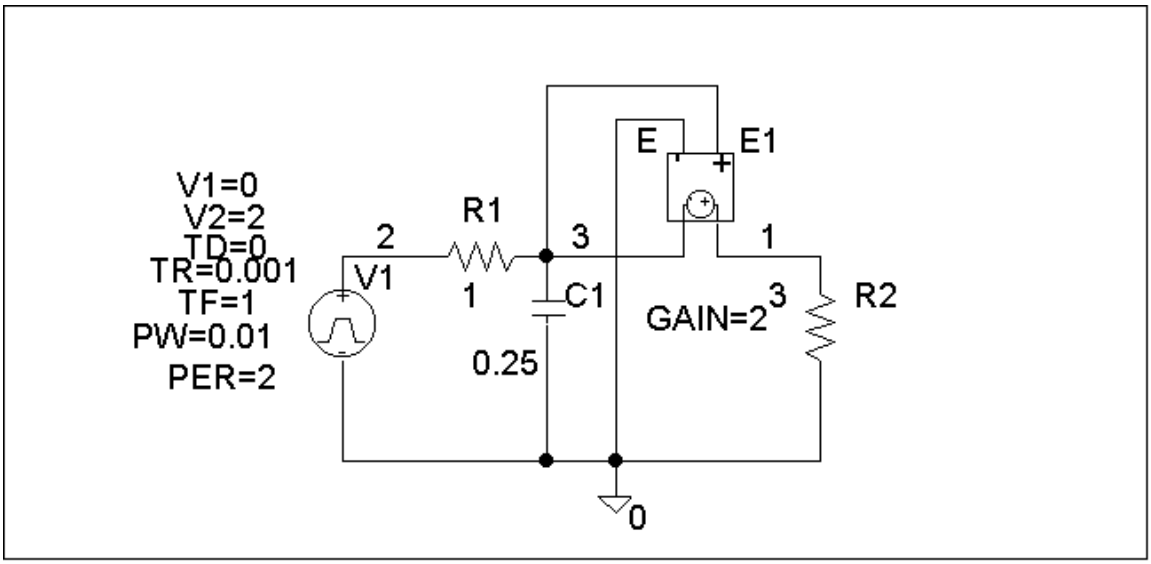

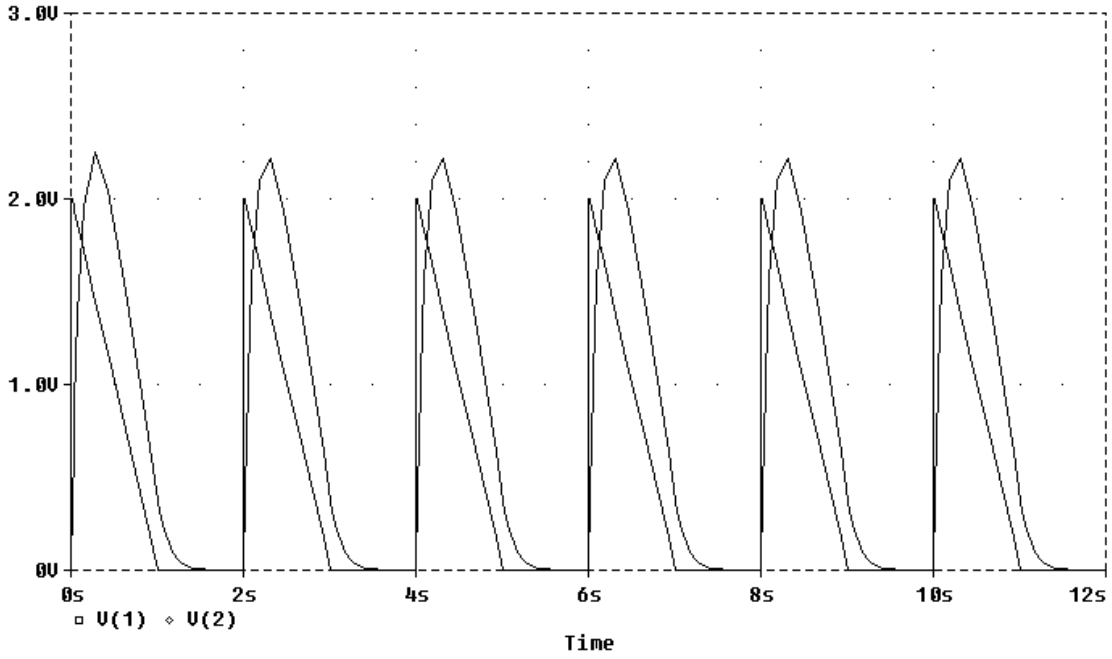

FOURIER COMPONENTS OF TRANSIENT RESPONSE V(1)

www.konkur.in

DC COMPONENT = 7.658051E-01

HARMONIC NO	FREQUENCY (HZ)	FOURIER COMPONENT	NORMALIZED COMPONENT	PHASE (DEG)	NORMALIZED PHASE (DEG)
1	5.000E-01	1.070E+00	1.000E+00	1.004E+01	0.000E+00
2	1.000E+00	3.758E-01	3.512E-01	-3.924E+01	-4.928E+01
3	1.500E+00	2.111E-01	1.973E-01	-3.985E+01	-4.990E+01
4	2.000E+00	1.247E-01	1.166E-01	-5.870E+01	-6.874E+01
5	2.500E+00	8.538E-02	7.980E-02	-5.680E+01	-6.685E+01
6	3.000E+00	6.139E-02	5.738E-02	-6.563E+01	-7.567E+01
7	3.500E+00	4.743E-02	4.433E-02	-6.520E+01	-7.524E+01
8	4.000E+00	3.711E-02	3.469E-02	-7.222E+01	-8.226E+01
9	4.500E+00	2.997E-02	2.802E-02	-7.088E+01	-8.092E+01

TOTAL HARMONIC DISTORTION = 4.352895E+01 PERCENT

www.konkur.in

Chapter 17, Solution 71.

The schematic is shown below. In the Transient dialog box, we set Print Step = 0.02 s, Final Step = 12 s, Center Frequency = 0.5, Output Vars = V(1) and V(2), and click enable Fourier. After simulation, we compare the output and output waveforms as shown. The output includes the following Fourier components.

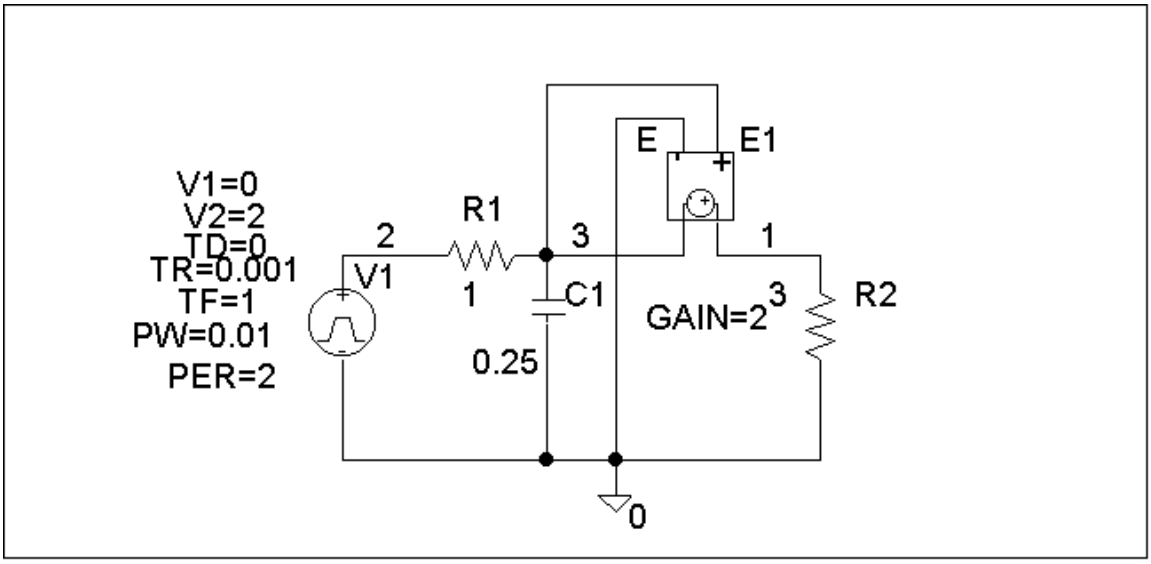

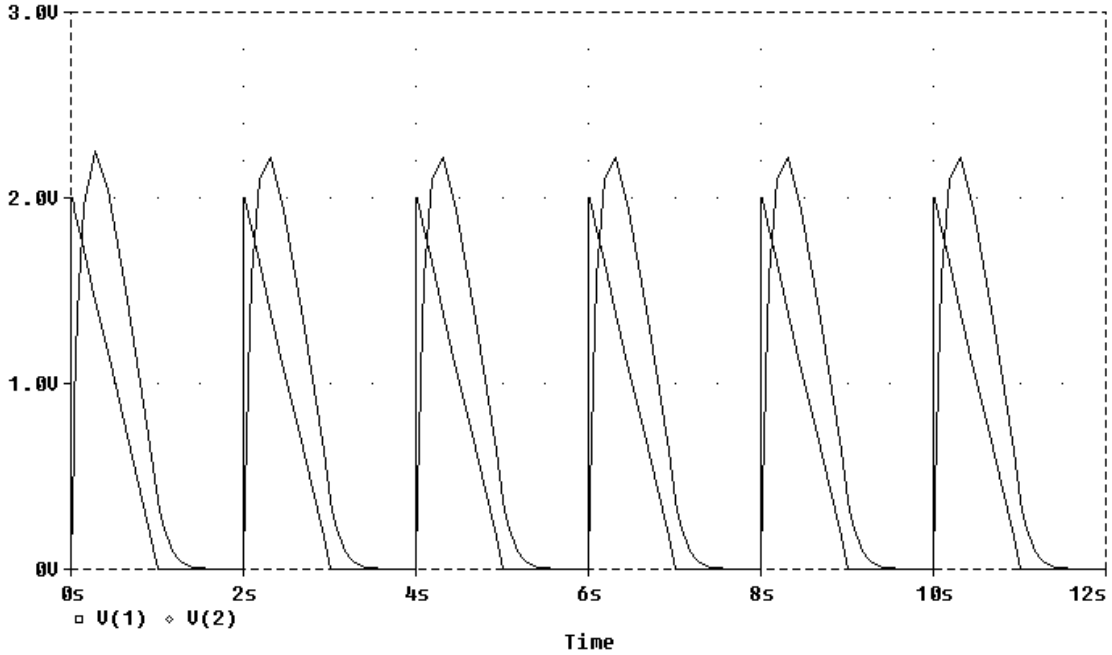

www.konkur.in

FOURIER COMPONENTS OF TRANSIENT RESPONSE V(1)

DC COMPONENT = 7.658051E-01

HARMONIC NO	FREQUENCY (HZ)	FOURIER COMPONENT	NORMALIZED COMPONENT	PHASE (DEG)	NORMALIZED PHASE (DEG)
1	5.000E-01	1.070E+00	1.000E+00	1.004E+01	0.000E+00
2	1.000E+00	3.758E-01	3.512E-01	-3.924E+01	-4.928E+01
3	1.500E+00	2.111E-01	1.973E-01	-3.985E+01	-4.990E+01
4	2.000E+00	1.247E-01	1.166E-01	-5.870E+01	-6.874E+01
5	2.500E+00	8.538E-02	7.980E-02	-5.680E+01	-6.685E+01
6	3.000E+00	6.139E-02	5.738E-02	-6.563E+01	-7.567E+01
7	3.500E+00	4.743E-02	4.433E-02	-6.520E+01	-7.524E+01
8	4.000E+00	3.711E-02	3.469E-02	-7.222E+01	-8.226E+01
9	4.500E+00	2.997E-02	2.802E-02	-7.088E+01	-8.092E+01

TOTAL HARMONIC DISTORTION = 4.352895E+01 PERCENT

www.konkur.in

Chapter 17, Solution 72.

$T = 5, \ \omega_o = 2\pi/T = 2\pi/5$

f(t) is an odd function. $a_o = 0 = a_n$

$$b_n = \frac{4}{T}\int_0^{T/2} f(t)\sin(n\omega_o t)dt = \frac{4}{5}\int_0^{10} 10\sin(0.4n\pi t)dt$$

$$= -\frac{8x5}{2n\pi}\cos(0.4\pi nt)\Big|_0^1 = \frac{20}{n\pi}[1-\cos(0.4n\pi)]$$

$$f(t) = \mathbf{\frac{20}{\pi}\sum_{n=1}^{\infty}\frac{1}{n}[1-\cos(0.4n\pi)]\sin(0.4n\pi t)}$$

www.konkur.in

Chapter 17, Solution 73.

$$p = \frac{V_{DC}^2}{R} + \frac{1}{2}\sum \frac{V_n^2}{R}$$

$$= 0 + 0.5[(2^2 + 1^2 + 1^2)/10] = \mathbf{300\ mW}$$

www.konkur.in

Chapter 17, Solution 74.

(a) $A_n = \sqrt{a_n^2 + b_n^2}$, $\phi = \tan^{-1}(b_n/a_n)$

$A_1 = \sqrt{6^2 + 8^2} = 10$, $\phi_1 = \tan^{-1}(6/8) = 36.87°$

$A_2 = \sqrt{3^2 + 4^2} = 5$, $\phi_2 = \tan^{-1}(3/4) = 36.87°$

$i(t) = \mathbf{\{4 + 10\cos(100\pi t - 36.87°) - 5\cos(200\pi t - 36.87°)\}\ A}$

(b) $p = I_{DC}^2 R + 0.5\sum I_n^2 R$

$= 2[4^2 + 0.5(10^2 + 5^2)] = \mathbf{157\ W}$

www.konkur.in

Chapter 17, Solution 75.

The lowpass filter is shown below.

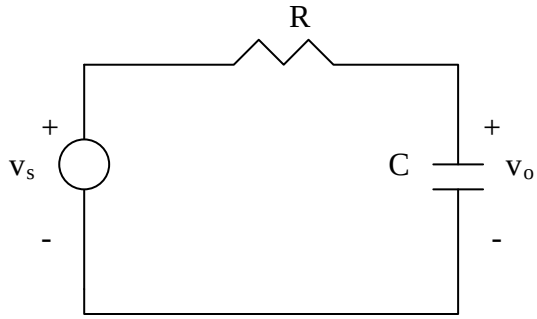

$$v_s = \frac{A\tau}{T} + \frac{2A}{T}\sum_{n=1}^{\infty}\frac{1}{n}\sin\frac{n\pi\tau}{T}\cos n\omega_o t$$

$$V_o = \frac{\frac{1}{j\omega_n C}}{R + \frac{1}{j\omega_n C}} V_s = \frac{1}{1 + j\omega_n RC} V_s, \qquad \omega_n = n\omega_o = 2n\pi / T$$

For n=0, (dc component), $V_o = V_s = \frac{A\tau}{T}$ (1)

For the nth harmonic,

$$V_o = \frac{1}{\sqrt{1+\omega^2{}_n R^2 C^2}\angle \tan^{-1}\omega_n RC} \bullet \frac{2A}{nT}\sin\frac{n\pi\tau}{T}\angle -90^o$$

When n=1, $|V_o| = \frac{2A}{T}\sin\frac{n\pi\tau}{T} \bullet \frac{1}{\sqrt{1+\frac{4\pi^2}{T}R^2C^2}}$ (2)

From (1) and (2),

$$\frac{A\tau}{T} = 50x\frac{2A}{T}\sin\frac{\pi}{10}\frac{1}{\sqrt{1+\frac{4\pi^2}{T}R^2C^2}} \longrightarrow \sqrt{1+\frac{4\pi^2}{T}R^2C^2} = \frac{30.9}{\tau} = 3.09x10^4$$

www.konkur.in

$$1+\frac{4\pi^2}{T}R^2C^2 = 10^{10} \longrightarrow C = \frac{T}{2\pi R}10^5 = \frac{10^{-2}x3.09x10^4}{4\pi x10^3} = \underline{24.59\,mF}$$

www.konkur.in

Chapter 17, Solution 76.

$v_s(t)$ is the same as f(t) in Figure 16.1 except that the magnitude is multiplied by 10. Hence

$$v_o(t) = 5 + \frac{20}{\pi}\sum_{k=1}^{\infty}\frac{1}{n}\sin(n\pi t), \quad n = 2k - 1$$

$$T = 2, \ \omega_o = 2\pi/T = 2\pi, \ \omega_n = n\omega_o = 2n\pi$$

$$j\omega_n L = j2n\pi; \ Z = R||10 = 10R/(10 + R)$$

$$V_o = ZV_s/(Z + j2n\pi) = [10R/(10R + j2n\pi(10 + R))]V_s$$

$$V_o = \frac{10R\angle -\tan^{-1}\{(n\pi/5R)(10+R)\}}{\sqrt{100R^2 + 4n^2\pi^2(10+R)^2}}V_s$$

$$V_s = [20/(n\pi)]\angle 0°$$

The source current I_s is

$$I_s = \frac{V_s}{Z + j2n\pi} = \frac{V_s}{\frac{10R}{10+R} + j2n\pi} = \frac{(10+R)\frac{20}{n\pi}}{10R + j2n\pi(10+R)}$$

$$= \frac{(10+R)\frac{20}{n\pi}\angle -\tan^{-1}\{(n\pi/3)(10+R)\}}{\sqrt{100R^2 + 4n^2\pi^2(10+R)^2}}$$

$$p_s = V_{DC}I_{DC} + \frac{1}{2}\sum V_{sn}I_{sn}\cos(\theta_n - \phi_n)$$

For the DC case, L acts like a short-circuit.

$$I_s = \frac{5}{\frac{10R}{10+R}} = \frac{5(10+R)}{10R}, \ V_s = 5 = V_o$$

www.konkur.in

$$p_s = \frac{25(10+R)}{10R} + \frac{1}{2}\left[\left(\frac{20}{\pi}\right)^2 \frac{(10+R)\cos\left(\tan^{-1}\left(\frac{\pi}{5}(10+R)\right)\right)}{\sqrt{100R^2+4\pi^2(10+R)^2}}\right.$$

$$\left. + \left(\frac{10}{\pi}\right)^2 \frac{(10+R)^2\cos\left(\tan^{-1}\left(\frac{2\pi}{5}(10+R)\right)\right)}{\sqrt{100R^2+16\pi^2(10+R)^2}} + \cdots\right]$$

$$p_s = \frac{V_{DC}}{R} + \frac{1}{2}\sum_{n=1}^{\infty}\frac{V_{on}}{R}$$

$$= \frac{25}{R} + \frac{1}{2}\left[\frac{100R}{100R^2+4\pi^2(10+R)^2} + \frac{100R}{100R^2+10\pi^2(10+R)^2} + \cdots\right]$$

We want $p_o = (70/100)p_s = 0.7p_s$. Due to the complexity of the terms, we consider only the DC component as an approximation. In fact the DC component has the latgest share of the power for both input and output signals.

$$\frac{25}{R} = \frac{7}{10} \text{ x } \frac{25(10+R)}{10R}$$

100 = 70 + 7R which leads to R = 30/7 = **<u>4.286 Ω</u>**

www.konkur.in

Chapter 17, Solution 77.

(a) For the first two AC terms, the frequency ratio is 6/4 = 1.5 so that the highest common factor is 2. Hence $\omega_o = 2$.

$$T = 2\pi/\omega_o = 2\pi/2 = \boldsymbol{\pi}$$

(b) The average value is the DC component = **–2**

(c)
$$V_{rms} = \sqrt{a_o + \frac{1}{2}\sum_{n=1}^{\infty}(a_n^2 + b_n^2)}$$

$$V_{rms}^2 = (-2)^2 + \frac{1}{2}(10^2 + 8^2 + 6^2 + 3^2 + 1^2) = 121.5$$

V_{rms} = **11.02 V**

www.konkur.in

Chapter 17, Solution 78.

(a) $$p = \frac{V_{DC}^2}{R} + \frac{1}{2}\sum\frac{V_n^2}{R} = \frac{V_{DC}^2}{R} + \sum\frac{V_{n,rms}^2}{R}$$

$$= 0 + (40^2/5) + (20^2/5) + (10^2/5) = \mathbf{420\ W}$$

(b) 5% increase = (5/100)420 = 21

$$p_{DC} = 21\text{ W} = \frac{V_{DC}^2}{R} \quad \text{which leads to} \quad V_{DC}^2 = 21R = 105$$

$$V_{DC} = \mathbf{10.25\ V}$$

www.konkur.in

Chapter 17, Solution 79.

From Table 17.3, it is evident that $a_n = 0$,

$$b_n = 4A/[\pi(2n - 1)], \quad A = 10.$$

A Fortran program to calculate b_n is shown below. The result is also shown.

```
C       FOR PROBLEM 17.79
                DIMENSION B(20)

                A  =  10
                PIE  =  3.142
                C  =  4.*A/PIE
                DO 10 N = 1, 10
                B(N)  =  C/(2.*FLOAT(N) – 1.)
                PRINT  *, N, B(N)
10              CONTINUE
                STOP
                END
```

n	b_n
1	12.731
2	4.243
3	2.546
4	1.8187
5	1.414
6	1.1573
7	0.9793
8	0.8487
9	0.7498
10	0.6700

www.konkur.in

Chapter 17, Solution 80.

From Problem 17.55,

$$c_n = [1 + e^{-jn\pi}]/[2\pi(1 - n^2)]$$

This is calculated using the Fortran program shown below. The results are also shown.

```
C       FOR PROBLEM 17.80
                COMPLEX X, C(0:20)

                PIE  =  3.1415927
                A  =  2.0*PIE
                DO  10  N = 0, 10
                IF(N.EQ.1) GO TO 10
                X  =  CMPLX(0, PIE*FLOAT(N))
                C(N)  =  (1.0 + CEXP(–X))/(A*(1 – FLOAT(N*N)))
                PRINT *, N, C(N)
10              CONTINUE
                STOP
                END
```

n	c_n
0	0.3188 + j0
1	0
2	–0.1061 + j0
3	0
4	$-0.2121\text{x}10^{-1}$ + j0
5	0
6	$-0.9095\text{x}10^{-2}$ + j0
7	0
8	$-0.5052\text{x}10^{-2}$ + j0
9	0
10	$-0.3215\text{x}10^{-2}$ + j0

www.konkur.in

Chapter 17, Solution 81.

(a)

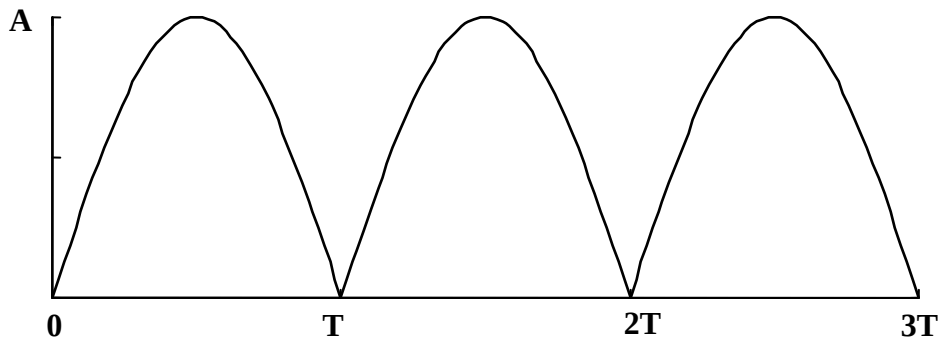

$$f(t) = \frac{2A}{\pi} - \frac{4A}{\pi}\sum_{n=1}^{\infty}\frac{1}{4n^2-1}\cos(n\omega_o t)$$

The total average power is $p_{avg} = F_{rms}^2 R = F_{rms}^2$ since R = 1 ohm.

$$P_{avg} = F_{rms}^2 = \frac{1}{T}\int_0^T f^2(t)dt = \mathbf{0.5A^2}$$

(b) From the Fourier series above

$$|c_o| = 2A/\pi,\ |c_n| = |a_n|/2 = 2A/[\pi(4n^2-1)]$$

n	ω_o	$\lvert c_n\rvert$	$\lvert c_o\rvert^2$ or $2\lvert c_n\rvert^2$	% power
0	0	$2A/\pi$	$4A^2/(\pi^2)$	81.1%
1	$2\omega_o$	$2A/(3\pi)$	$8A^2/(9\pi^2)$	18.01%
2	$4\omega_o$	$2A/(15\pi)$	$8A^2/(225\pi^2)$	0.72%
3	$6\omega_o$	$2A/(35\pi)$	$8A^2/(1225\pi^2)$	0.13%
4	$8\omega_o$	$2A/(63\pi)$	$8A^2/(3969\pi^2)$	0.04%

(c) **81.1%**

(d) **0.72%**

www.konkur.in

Chapter 17, Solution 82.

$$P = \frac{V_{DC}^2}{R} + \frac{1}{2}\sum_{n=1}^{\infty}\frac{V_n^2}{R}$$

Assuming V is an amplitude-phase form of Fourier series. But

$$|A_n| = 2|C_n|, \quad c_o = a_o$$

$$|A_n|^2 = 4|C_n|^2$$

Hence,

$$P = \frac{c_o^2}{R} + 2\sum_{n=1}^{\infty}\frac{c_n^2}{R}$$

Alternatively,

$$P = \frac{V_{rms}^2}{R}$$

where

$$V_{rms}^2 = a_o^2 + \frac{1}{2}\sum_{n=1}^{\infty}A_n^2 = c_o^2 + 2\sum_{n=1}^{\infty}c_n^2 = \sum_{n=-\infty}^{\infty}c_n^2$$

$$= 10^2 + 2(8.5^2 + 4.2^2 + 2.1^2 + 0.5^2 + 0.2^2)$$

$$= 100 + 2x94.57 = 289.14$$

$$P = 289.14/4 = \mathbf{72.3\ W}$$

www.konkur.in

Chapter 18, Solution 1.

$$f'(t) = \delta(t+2) - \delta(t+1) - \delta(t-1) + \delta(t-2)$$

$$j\omega F(\omega) = e^{j2\omega} - e^{j\omega} - e^{-j\omega} + e^{-j\omega 2}$$

$$= 2\cos 2\omega - 2\cos\omega$$

$$F(\omega) = \frac{\mathbf{2[\cos 2\omega - \cos\omega]}}{\mathbf{j\omega}}$$

www.konkur.in

Chapter 18, Solution 2.

Using Fig. 18.27, design a problem to help other students to better understand the Fouier transform given a wave shape.

Although there are many ways to solve this problem, this is an example based on the same kind of problem asked in the third edition.

Problem

What is the Fourier transform of the triangular pulse in Fig. 18.27?

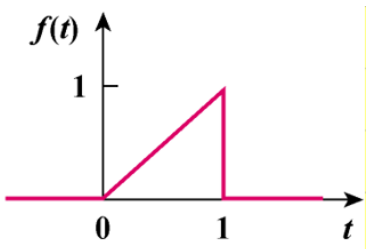

Figure 18.27

Solution

$$f(t) = \begin{cases} t, & 0 < t < 1 \\ 0, & \text{otherwise} \end{cases}$$

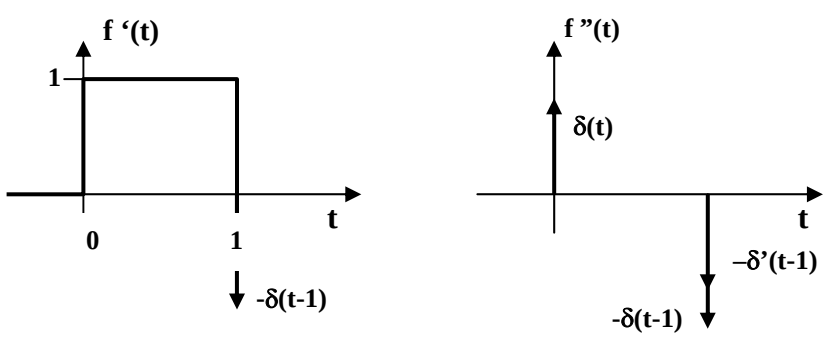

$f''(t) = \delta(t) - \delta(t - 1) - \delta'(t - 1)$

Taking the Fourier transform gives

$$-\omega^2 F(\omega) = 1 - e^{-j\omega} - j\omega e^{-j\omega}$$

$$F(\omega) = \frac{(1 + j\omega)e^{-j\omega} - 1}{\omega^2}$$

www.konkur.in

or $F(\omega) = \int_0^1 t\, e^{-j\omega t}\, dt$

But $\int x\, e^{ax} dx = \frac{e^{ax}}{a^2}(ax - 1) + c$

$$F(\omega) = \frac{e^{-j\omega}}{(-j\omega)^2}(-j\omega t - 1)\Big|_0^1 = \frac{\mathbf{1}}{\boldsymbol{\omega}^2}\left[(\mathbf{1} + \mathbf{j}\boldsymbol{\omega})\mathbf{e}^{-\mathbf{j}\boldsymbol{\omega}} - \mathbf{1}\right]$$

www.konkur.in

Chapter 18, Solution 3.

$$f(t) = \frac{1}{2}t, -2 < t < 2, \qquad f'(t) = \frac{1}{2}, -2 < t < 2$$

$$F(\omega) = \int_{-2}^{2} \frac{1}{2} t\, e^{j\omega t} dt = \frac{e^{-j\omega t}}{2(-j\omega)^2}(-j\omega t - 1)\Big|_{-2}^{2}$$

$$= -\frac{1}{2\omega^2}\left[e^{-j\omega 2}(-j\omega 2 - 1) - e^{j\omega 2}(j\omega 2 - 1)\right]$$

$$= -\frac{1}{2\omega^2}\left[-j\omega 2\left(e^{-j\omega 2} + e^{j\omega 2}\right) + e^{j\omega 2} - e^{-j\omega 2}\right]$$

$$= -\frac{1}{2\omega^2}\left(-j\omega 4\cos 2\omega + j2\sin 2\omega\right)$$

$$F(\omega) = \frac{\mathbf{j}}{\boldsymbol{\omega}^2}\mathbf{(2\omega\cos 2\omega - \sin 2\omega)}$$

www.konkur.in

Chapter 18, Solution 4.

We can solve the problem by following the approach demonstrated in Example 18.5.

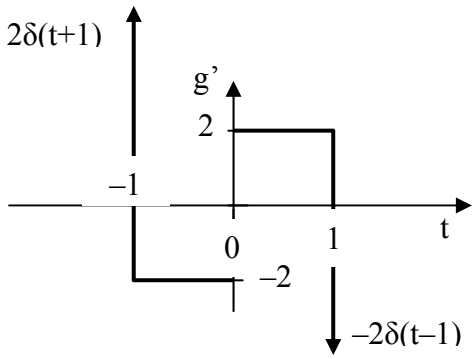

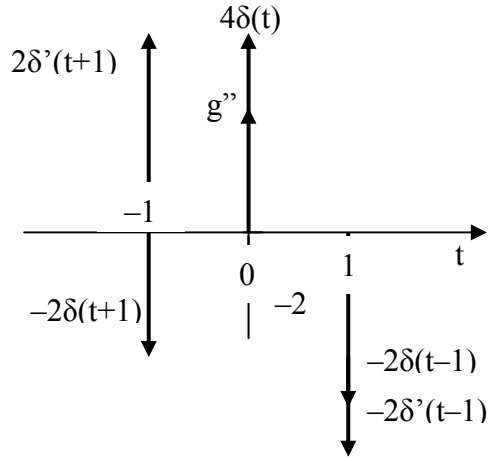

$$g'' = -2\delta(t+1) + 2\delta'(t+1) + 4\delta(t) - 2\delta(t-1) - 2\delta'(t-1)$$

$$(j\omega)^2 G(\omega) = -2e^{j\omega} + 2j\omega e^{j\omega} + 4 - 2e^{-j\omega} - 2j\omega e^{-j\omega}$$
$$= -4\cos\omega - 4\omega\sin\omega + 4$$

$$\mathbf{G(\omega) = \frac{4}{\omega^2}(\cos\omega + \omega\sin\omega - 1)}$$

www.konkur.in

Chapter 18, Solution 5.

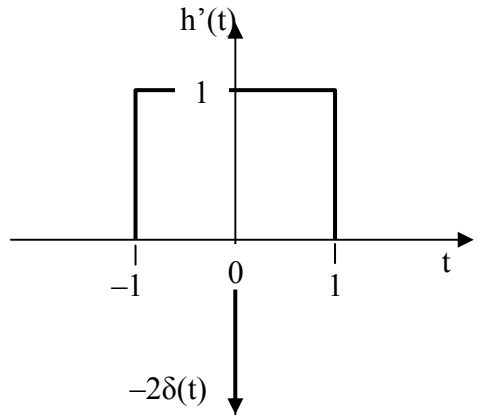

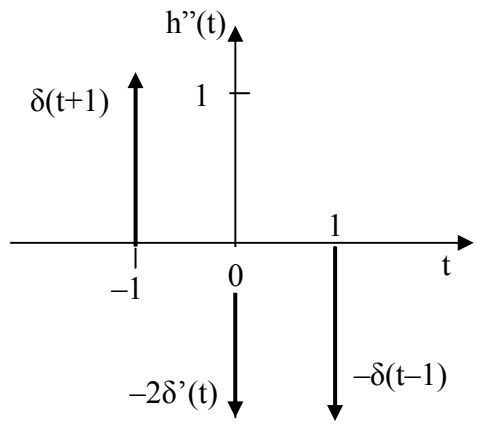

$$h''(t) = \delta(t+1) - \delta(t-1) - 2\delta'(t)$$

$$(j\omega)^2 H(\omega) = e^{j\omega} - e^{-j\omega} - 2j\omega = 2j\sin\omega - 2j\omega$$

$$H(\omega) = \frac{\mathbf{2j}}{\boldsymbol{\omega}} - \frac{\mathbf{2j}}{\boldsymbol{\omega}^2}\mathbf{sin}\,\boldsymbol{\omega}$$

www.konkur.in

Chapter 18, Solution 6.

(a) The derivative of f(t) is shown below.

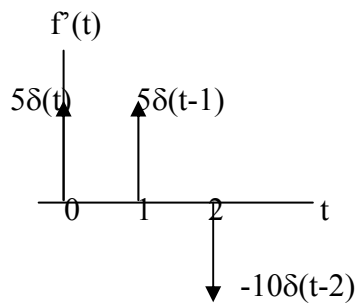

$$f'(t) = 5\delta(t) + 5\delta(t-1) - 10\delta(t-2)$$

Taking the Fourier transform of each term,

$$j\omega F(\omega) = 5 + 5e^{-j\omega} - 10e^{-j2\omega}$$

$$F(\omega) = \frac{5 + 5e^{-j\omega} - 10e^{-j2\omega}}{j\omega}$$

(b) The derivative of g(t) is shown below.

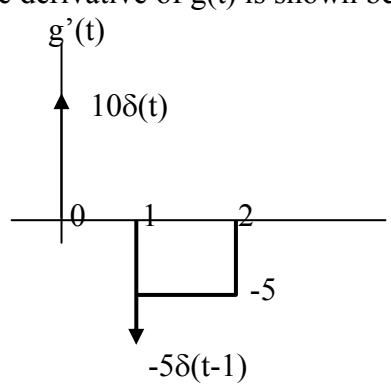

www.konkur.in

The second derivative of g(t) is shown below.

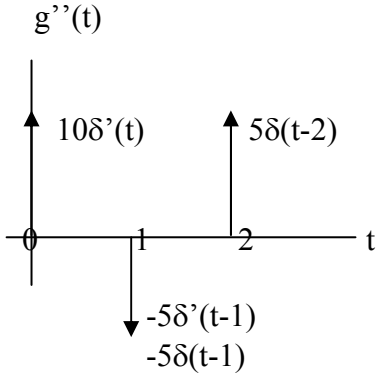

$$g''(t) = 10\delta'(t) - 5\delta'(t-1) - 5\delta(t-1) + 5\delta(t-2)$$

Take the Fourier transform of each term.

$$(j\omega)^2 G(j\omega) = 10j\omega - 5j\omega e^{-j\omega} - 5e^{-j\omega} + 5e^{-j2\omega}$$ which leads to

$$G(j\omega) = \mathbf{(-10j\omega + 5j\omega e^{-j\omega} + 5e^{-j\omega} - 5e^{-j2\omega})/\omega^2}$$

www.konkur.in

Chapter 18, Solution 7.

(a) Take the derivative of $f_1(t)$ and obtain $f_1'(t)$ as shown below.

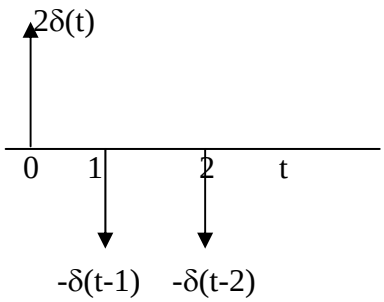

$$f_1'(t) = 2\delta(t) - \delta'(t-1) - \delta(t-2)$$

Take the Fourier transform of each term,

$$j\omega F_1(\omega) = 2 - e^{-j\omega} - e^{-j2\omega}$$

$$\underline{F_1(\omega) = \frac{2 - e^{-j\omega} - e^{-j2\omega}}{j\omega}}$$

(b) $f_2(t) = 5t$

$$F_2(\omega) = \int_{-\infty}^{\infty} f_2(t) e^{-j\omega} dt = \int_0^2 5te^{-j\omega} dt = \frac{5}{(-j\omega)^2} e^{-j\omega t}(-j\omega - 1)\Big|_0^2$$

$$\underline{F_2(\omega) = \frac{5e^{-j2\omega}}{\omega^2}(1 + j\omega 2) - \frac{5}{\omega^2}}$$

www.konkur.in

Chapter 18, Solution 8.

(a)
$$F(\omega) = \int_0^1 2e^{-j\omega t}dt + \int_1^2 (4-2t)e^{-j\omega t}dt$$
$$= \frac{2}{-j\omega}e^{-j\omega t}\Big|_0^1 + \frac{4}{-j\omega}e^{-j\omega t}\Big|_1^2 - \frac{2}{-\omega^2}e^{-j\omega t}(-j\omega t - 1)\Big|_1^2$$

$$\mathbf{F(\omega) = \frac{2}{\omega^2} + \frac{2}{j\omega}e^{-j\omega} + \frac{2}{j\omega} - \frac{4}{j\omega}e^{-j2\omega} - \frac{2}{\omega^2}(1 + j2\omega)e^{-j2\omega}}$$

(b) g(t) = 2[u(t+2) – u(t-2)] - [u(t+1) – u(t-1)]

$$\mathbf{G(\omega) = \frac{4\sin 2\omega}{\omega} - \frac{2\sin\omega}{\omega}}$$

www.konkur.in

Chapter 18, Solution 9.

(a) y(t) = u(t+2) – u(t-2) + 2[u(t+1) – u(t-1)]

$$\mathbf{Y(\omega) = \underline{\frac{2}{\omega}\sin 2\omega + \frac{4}{\omega}\sin\omega}}$$

(b) $$\mathbf{Z(\omega) = \int_0^1 (-2t)e^{-j\omega t}dt = \frac{-2e^{-j\omega t}}{-\omega^2}(-j\omega t - 1)\Big|_0^1 = \underline{\frac{2}{\omega^2} - \frac{2e^{-j\omega}}{\omega^2}(1 + j\omega)}}$$

www.konkur.in

Chapter 18, Solution 10.

(a) $x(t) = e^{2t}u(t)$

$X(\omega) =$ **$1/(-2 + j\omega)$**

(b) $$e^{-(t)} = \begin{cases} e^{-t}, & t > 0 \\ e^{t}, & t < 0 \end{cases}$$

$$Y(\omega) = \int_{-1}^{1} y(t)e^{j\omega t}\,dt = \int_{-1}^{0} e^{t}\,e^{j\omega t}\,dt + \int_{0}^{1} e^{-t}\,e^{-j\omega t}\,dt$$

$$= \frac{e^{(1-j\omega)t}}{1-j\omega}\Bigg|_{-1}^{0} + \frac{e^{-(1+j\omega)t}}{-(1+j\omega)}\Bigg|_{0}^{1}$$

$$= \frac{2}{1+\omega^2} - e^{-1}\left[\frac{\cos\omega + j\sin\omega}{1-j\omega} + \frac{\cos\omega - j\sin\omega}{1+j\omega}\right]$$

$$Y(\omega) = \mathbf{\frac{2}{1+\omega^2}\left[1 - e^{-1}(\cos\omega - \omega\sin\omega)\right]}$$

www.konkur.in

Chapter 18, Solution 11.

$$f(t) = \sin \pi t\,[u(t) - u(t - 2)]$$

$$F(\omega) = \int_0^2 \sin \pi t\, e^{-j\omega t}\, dt = \frac{1}{2j}\int_0^2 \left(e^{j\pi t} - e^{-j\pi t}\right) e^{-j\omega t}\, dt$$

$$= \frac{1}{2j}\left[\int_0^2 (e^{+j(-\omega+\pi)t} + e^{-j(\omega+\pi)t})dt\right]$$

$$= \frac{1}{2j}\left[\frac{1}{-j(\omega-\pi)} e^{-j(\omega-\pi)t}\Big|_0^2 + \frac{e^{-j(\omega+\pi)t}}{-j(\omega+\pi)}\Big|_0^2\right]$$

$$= \frac{1}{2}\left(\frac{1-e^{-j2\omega}}{\pi-\omega} + \frac{1-e^{-j2\omega}}{\pi+\omega}\right)$$

$$= \frac{1}{2(\pi^2-\omega^2)}\left(2\pi + 2\pi e^{-j2\omega}\right)$$

$$F(\omega) = \frac{\pi}{\omega^2 - \pi^2}\left(e^{-j\omega 2} - 1\right)$$

www.konkur.in

Chapter 18, Solution 12.

(a) $F_1(\omega) = \dfrac{10}{(3 + j\omega)^2 + 100}$

(b) $F_2(\omega) = \dfrac{4 + j\omega}{(4 + j\omega)^2 + 100}$

www.konkur.in

Chapter 18, Solution 13.

(a) We know that $F[\cos at] = \pi[\delta(\omega - a) + \delta(\omega + a)]$.

Using the time shifting property,

$$\mathbf{F[\cos a(t - \pi/3a)] = \pi e^{-j\omega\pi/3a}[\delta(\omega - a) + \delta(\omega + a)] = \underline{\pi e^{-j\pi/3}\delta(\omega - a) + \pi e^{j\pi/3}\delta(\omega + a)}}$$

(b) $\sin \pi(t+1) = \sin \pi t \cos \pi + \cos \pi t \sin \pi = -\sin \pi t$

g(t) = -u(t+1) sin (t+1)

Let x(t) = u(t)sin t, then $X(\omega) = \dfrac{1}{(j\omega)^2 + 1} = \dfrac{1}{1 - \omega^2}$

Using the time shifting property,

$$\mathbf{G(\omega) = -\frac{1}{1 - \omega^2} e^{j\omega} = \underline{\frac{e^{j\omega}}{\omega^2 - 1}}}$$

(c) Let y(t) = 1 + Asin at, then $Y(\omega) = 2\pi\delta(\omega) + j\pi A[\delta(\omega + a) - \delta(\omega - a)]$

h(t) = y(t) cos bt

Using the modulation property,

$$H(\omega) = \frac{1}{2}[Y(\omega + b) + Y(\omega - b)]$$

$$\mathbf{H(\omega) = \underline{\pi[\delta(\omega + b) + \delta(\omega - b)] + \frac{j\pi A}{2}[\delta(\omega + a + b) - \delta(\omega - a + b) + \delta(\omega + a - b) - \delta(\omega - a - b)]}}$$

(d) $$\mathbf{I(\omega) = \int_0^4 (1 - t)e^{-j\omega t}dt = \frac{e^{-j\omega t}}{-j\omega} - \frac{e^{-j\omega t}}{-\omega^2}(-j\omega t - 1)\Big|_0^4 = \underline{\frac{1}{\omega^2} - \frac{e^{-j4\omega}}{j\omega} - \frac{e^{-j4\omega}}{\omega^2}(j4\omega + 1)}}$$

www.konkur.in

Chapter 18, Solution 14.

Design a problem to help other students to better understand finding the Fourier transform of a variety of time varying functions (do at least three).

Although there are many ways to solve this problem, this is an example based on the same kind of problem asked in the third edition.

Problem

Find the Fourier transforms of these functions:

(a) $f(t) = e^{-t} \cos(3t + \pi)\, u(t)$
(b) $g(t) = \sin \pi t\, [\, u(t + 1) - u(t-1)]$
(c) $h(t) = e^{-2t} \cos \pi t\, u(t-1)$
(d) $p(t) = e^{-2t} \sin 4t\, u(-t)$
(e) $q(t) = 4 \operatorname{sgn}(t - 2) + 3\delta(t) - 2\, u(t - 2)$

Solution

(a) $$\cos(3t + \pi) = \cos 3t \cos \pi - \sin 3t \sin \pi = \cos 3t(-1) - \sin 3t(0) = -\cos(3t)$$

$$f(t) = -e^{-t} \cos 3t\, u(t)$$

$$F(\omega) = \frac{-(1 + j\omega)}{(1 + j\omega)^2 + 9}$$

(b)

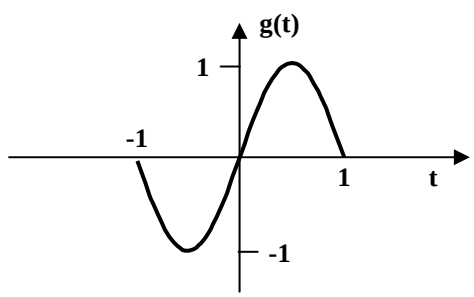

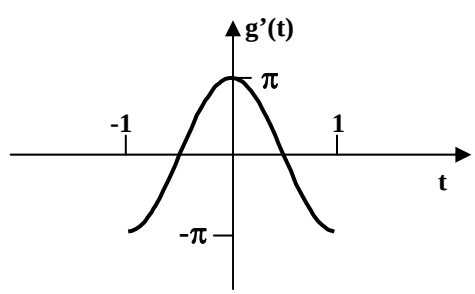

www.konkur.in

$$g'(t) = \pi\cos\pi t\left[u(t-1) - u(t-1)\right]$$
$$g''(t) = -\pi^2 g(t) - \pi\delta(t+1) + \pi\delta(t-1)$$
$$-\omega^2 G(\omega) = -\pi^2 G(\omega) - \pi e^{j\omega} + \pi e^{-j\omega}$$
$$\left(\pi^2 - \omega^2\right)G(\omega) = -\pi(e^{j\omega} - e^{-j\omega}) = -2j\pi\sin\omega$$
$$G(\omega) = \frac{\mathbf{2j\pi\sin\omega}}{\boldsymbol{\omega^2 - \pi^2}}$$

Alternatively, we compare this with Prob. 17.7

$f(t) = g(t - 1)$
$F(\omega) = G(\omega)e^{-j\omega}$

$$G(\omega) = F(\omega)e^{j\omega} = \frac{\pi}{\omega^2 - \pi^2}\left(e^{-j\omega} - e^{j\omega}\right)$$
$$= \frac{-j2\pi\sin\omega}{\omega^2 - \pi^2}$$
$$G(\omega) = \frac{\mathbf{2j\pi\sin\omega}}{\boldsymbol{\pi^2 - \omega^2}}$$

(c) $\cos\pi(t-1) = \cos\pi t\cos\pi + \sin\pi t\sin\pi = \cos\pi t(-1) + \sin\pi t(0) = -\cos\pi t$

Let $x(t) = e^{-2(t-1)}\cos\pi(t-1)u(t-1) = -e^2 h(t)$

and $y(t) = e^{-2t}\cos(\pi t)u(t)$

$$Y(\omega) = \frac{2 + j\omega}{(2 + j\omega)^2 + \pi^2}$$
$$y(t) = x(t-1)$$
$$Y(\omega) = X(\omega)e^{-j\omega}$$
$$X(\omega) = \frac{(2 + j\omega)e^{j\omega}}{(2 + j\omega)^2 + \pi^2}$$
$$X(\omega) = -e^2 H(\omega)$$
$$H(\omega) = -e^{-2}X(\omega)$$
$$= \frac{\mathbf{-(2 + j\omega)e^{j\omega-2}}}{\boldsymbol{(2 + j\omega)^2 + \pi^2}}$$

(d) Let $x(t) = e^{-2t}\sin(-4t)u(-t) = y(-t)$

$p(t) = -x(t)$

where $y(t) = e^{2t}\sin 4t\, u(t)$

$$Y(\omega) = \frac{2 + j\omega}{(2 + j\omega)^2 + 4^2}$$
$$X(\omega) = Y(-\omega) = \frac{2 - j\omega}{(2 - j\omega)^2 + 16}$$

www.konkur.in

$$p(\omega) = -X(\omega) = \frac{\mathbf{j\omega - 2}}{\mathbf{(j\omega - 2)^2 + 16}}$$

(e) $$Q(\omega) = \frac{8}{j\omega}e^{-j\omega 2} + 3 - 2\left(\pi\delta(\omega) + \frac{1}{j\omega}\right)e^{-j\omega 2}$$

$$Q(\omega) = \mathbf{\frac{6}{j\omega}e^{j\omega 2} + 3 - 2\pi\delta(\omega)e^{-j\omega 2}}$$

www.konkur.in

Chapter 18, Solution 15.

(a) $F(\omega) = e^{j3\omega} - e^{-j\omega 3} = \mathbf{2j\sin 3\omega}$

(b) Let $g(t) = 2\delta(t-1),\ G(\omega) = 2e^{-j\omega}$

$$F(\omega) = F\left(\int_{-\infty}^{t} g(t)\,dt\right)$$

$$= \frac{G(\omega)}{j\omega} + \pi F(0)\delta(\omega)$$

$$= \frac{2e^{-j\omega}}{j\omega} + 2\pi\delta(-1)\delta(\omega)$$

$$= \frac{\mathbf{2e^{-j\omega}}}{\mathbf{j\omega}}$$

(c) $F\left[\delta(2t)\right] = \frac{1}{2}\cdot 1$

$$F(\omega) = \frac{1}{3}\cdot 1 - \frac{1}{2}j\omega = \mathbf{\frac{1}{3} - \frac{j\omega}{2}}$$

www.konkur.in

Chapter 18, Solution 16.

(a) Using duality properly

$$|t| \rightarrow \frac{-2}{\omega^2}$$

$$\frac{-2}{t^2} \rightarrow 2\pi|\omega|$$

or $$\frac{4}{t^2} \rightarrow -4\pi|\omega|$$

$$F(\omega) = \mathcal{F}\left(\frac{4}{t^2}\right) = \mathbf{-4\pi|\omega|}$$

(b) $$e^{-|a|t} \longrightarrow \frac{2a}{a^2+\omega^2}$$

$$\frac{2a}{a^2+t^2} \longrightarrow 2\pi e^{-a|\omega|}$$

$$\frac{8}{a^2+t^2} \longrightarrow 4\pi e^{-2|\omega|}$$

$$G(\omega) = \mathcal{F}\left(\frac{8}{4+t^2}\right) = \mathbf{4\pi e^{-2|\omega|}}$$

www.konkur.in

Chapter 18, Solution 17.

(a) Since $H(\omega) = F\left(\cos\omega_0 t\, f(t)\right) = \frac{1}{2}\left[F(\omega+\omega_0) + F(\omega-\omega_0)\right]$

where $F(\omega) = F\left[u(t)\right] = \pi\delta(\omega) + \frac{1}{j\omega}$, $\omega_0 = 2$

$$H(\omega) = \frac{1}{2}\left[\pi\delta(\omega+2) + \frac{1}{j(\omega+2)} + \pi\delta(\omega-2) + \frac{1}{j(\omega-2)}\right]$$

$$= \frac{\pi}{2}\left[\delta(\omega+2) + \delta(\omega-2)\right] - \frac{j}{2}\left[\frac{\omega+2+\omega-2}{(\omega+2)(\omega-2)}\right]$$

$$H(\omega) = \mathbf{\frac{\pi}{2}\left[\delta(\omega+2) + \delta(\omega-2)\right] - \frac{j\omega}{\omega^2-4}}$$

(b) $G(\omega) = F\left[\sin\omega_0 t\, f(t)\right] = \frac{j}{2}\left[F(\omega+\omega_0) - F(\omega-\omega_0)\right]$

where $F(\omega) = F\left[u(t)\right] = \pi\delta(\omega) + \frac{1}{j\omega}$

$$G(\omega) = \frac{j}{2}\left[\pi\delta(\omega+10) + \frac{1}{j(\omega+10)} - \pi\delta(\omega-10) - \frac{1}{j(\omega-10)}\right]$$

$$= \frac{j\pi}{2}\left[\delta(\omega+10) - \delta(\omega-10)\right] + \frac{j}{2}\left[\frac{j}{\omega-10} - \frac{j}{\omega+10}\right]$$

$$= \mathbf{\frac{j\pi}{2}\left[\delta(\omega+10) - \delta(\omega-10)\right] - \frac{10}{\omega^2-100}}$$

www.konkur.in

Chapter 18, Solution 18.

(a) $F[f(t-t_o)] = \int_{-\infty}^{\infty} f(t-t_o)e^{-j\omega t}dt$

Let $t - t_o = \lambda \quad \longrightarrow \quad t = \lambda + t_o, \qquad dt = d\lambda$

$$F[f(t-t_o)] = \int_{-\infty}^{\infty} f(\lambda)e^{-j\omega\lambda}e^{-j\omega t_o}d\lambda = e^{-j\omega t_o}F(\omega)$$

(b) Given that $\quad f(t) = F^{-1}[F(\omega)] = \frac{1}{2\pi}\int_{-\infty}^{\infty} F(\omega)e^{j\omega t}d\omega$

$$f'(t) = \frac{j\omega}{2\pi}\int_{-\infty}^{\infty} F(\omega)e^{j\omega t}dt = j\omega F^{-1}[F(\omega)]$$

or

$$F[f'(t)] = j\omega F(\omega)$$

(c) This is a special case of the time scaling property when a = –1. Hence,

$$F[f(-t)] = \frac{1}{|-1|}F(-\omega) = F(-\omega)$$

(d) $\quad F(\omega) = \int_{-\infty}^{\infty} f(t)e^{-j\omega t}dt$

Differentiating both sides respect to ω and multiplying by t yields

$$j\frac{dF(\omega)}{d\omega} = j\int_{-\infty}^{\infty}(-jt)f(t)e^{-j\omega t}dt = \int_{-\infty}^{\infty} tf(t)e^{-j\omega t}dt$$

Hence,

$$j\frac{dF(\omega)}{d\omega} = F[tf(t)]$$

www.konkur.in

Chapter 18, Solution 19.

$$F(\omega) = \int_{-\infty}^{\infty} f(t) e^{j\omega t}\, dt = \frac{1}{2}\int_0^1 \left(e^{j2\pi t} + e^{-j2\pi t}\right) e^{-j\omega t}\, dt$$

$$F(\omega) = \frac{1}{2}\int_0^1 \left[e^{-j(\omega+2\pi)t} + e^{-j(\omega-2\pi)t}\right] dt$$

$$= \frac{1}{2}\left[\frac{1}{-j(\omega+2\pi)} e^{-j(\omega+2\pi)t} + \frac{1}{-j(\omega-2\pi)} e^{-j(\omega-2\pi)t}\right]_0^1$$

$$= -\frac{1}{2}\left[\frac{e^{-j(\omega+2\pi)} - 1}{j(\omega+2\pi)} + \frac{e^{-j(\omega-2\pi)} - 1}{j(\omega-2\pi)}\right]$$

But $\quad e^{j2\pi} = \cos 2\pi + j\sin 2\pi = 1 = e^{-j2\pi}$

$$F(\omega) = -\frac{1}{2}\left(\frac{e^{-j\omega} - 1}{j}\right)\left(\frac{1}{\omega+2\pi} + \frac{1}{\omega-2\pi}\right)$$

$$= \mathbf{\frac{j\omega}{\omega^2 - 4\pi^2}\left(e^{-j\omega} - 1\right)}$$

www.konkur.in

Chapter 18, Solution 20.

(a) $F(c_n) = c_n\delta(\omega)$

$$F\left(c_n e^{jn\omega_o t}\right) = c_n\delta\left(\omega - n\omega_o\right)$$

$$F\left(\sum_{n=-\infty}^{\infty} c_n e^{jn\omega_o t}\right) = \sum_{n=-\infty}^{\infty} \mathbf{c_n\delta\left(\omega - n\omega_o\right)}$$

(b) $T = 2\pi \longrightarrow \omega_o = \dfrac{2\pi}{T} = 1$

$$c_n = \frac{1}{T}\int_0^T f(t)e^{-jn\omega_o t}\,dt = \frac{1}{2\pi}\left(\int_0^{\pi} 1\cdot e^{-jnt}\,dt + 0\right)$$

$$= \frac{1}{2\pi}\left(-\frac{1}{jn}e^{jnt}\Big|_0^{\pi}\right) = \frac{j}{2\pi n}\left(e^{-jn\pi} - 1\right)$$

But $e^{-jn\pi} = \cos n\pi + j\sin n\pi = \cos n\pi = (-1)^n$

$$c_n = \frac{j}{2n\pi}\left[(-1)^n - 1\right] = \begin{cases} 0, & n=\text{even} \\ \dfrac{-j}{n\pi}, & n=\text{odd}, n\neq 0 \end{cases}$$

for n = 0

$$c_n = \frac{1}{2\pi}\int_0^{\pi} 1\,dt = \frac{1}{2}$$

Hence

$$f(t) = \frac{1}{2} - \sum_{\substack{n=-\infty \\ n\neq 0 \\ n=\text{odd}}}^{\infty} \frac{j}{n\pi}e^{jnt}$$

$$F(\omega) = \mathbf{\frac{1}{2}\delta\omega - \sum_{\substack{n=-\infty \\ n\neq 0 \\ n=\text{odd}}}^{\infty} \frac{j}{n\pi}\delta\left(\omega - n\right)}$$

www.konkur.in

Chapter 18, Solution 21.

Using Parseval's theorem,

$$\int_{-\infty}^{\infty} f^2(t)dt = \frac{1}{2\pi}\int_{-\infty}^{\infty} |F(\omega)|^2 \, d\omega$$

If f(t) = u(t+a) – u(t+a), then

$$\int_{-\infty}^{\infty} f^2(t)dt = \int_{-a}^{a} (1)^2 dt = 2a = \frac{1}{2\pi}\int_{-\infty}^{\infty} 4a^2\left(\frac{\sin a\omega}{a\omega}\right)^2 d\omega$$

or

$$\int_{-\infty}^{\infty}\left(\frac{\sin a\omega}{a\omega}\right)^2 d\omega = \frac{4\pi a}{4a^2} = \frac{\pi}{a} \quad \text{as required.}$$

www.konkur.in

Chapter 18, Solution 22.

$$F\left[f(t)\sin\omega_o t\right]=\int_{-\infty}^{\infty} f(t)\frac{\left(e^{j\omega_o t}-e^{-j\omega_o t}\right)}{2j}e^{-j\omega t}\,dt$$

$$=\frac{1}{2j}\left[\int_{-\infty}^{\infty} f(t)e^{-j(\omega-\omega_o)t}\,dt-\int_{-\infty}^{\infty} e^{-j(\omega+\omega_o)t}\,dt\right]$$

$$=\mathbf{\frac{1}{2j}\left[F(\omega-\omega_o)-F(\omega+\omega_o)\right]}$$

www.konkur.in

Chapter 18, Solution 23.

(a) f(3t) leads to $\frac{1}{3}\cdot\frac{10}{(2+j\omega/3)(5+j\omega/3)}=\frac{30}{(6+j\omega)(15+j\omega)}$

$$F\left[f(-3t)\right]=\mathbf{\frac{30}{(6-j\omega)(15-j\omega)}}$$

(b) f(2t) $\longrightarrow$ $\frac{1}{2}\cdot\frac{10}{(2+j\omega/2)(15+j\omega/2)}=\frac{20}{(4+j\omega)(10+j\omega)}$

f(2t-1) = f [2(t-1/2)] $\longrightarrow$ $\mathbf{\frac{20e^{-j\omega/2}}{(4+j\omega)(10+j\omega)}}$

(c) f(t) cos 2t $\longrightarrow$ $\frac{1}{2}F(\omega+2)+\frac{1}{2}F(\omega+2)$

$$=\mathbf{\frac{5}{[2+j(\omega+2)][5+j(\omega+2)]}+\frac{5}{[2+j(\omega-2)[5+j(\omega-2)]]}}$$

(d) $F\left[\mathbf{f'(t)}\right]=\mathbf{j\omega F(\omega)=\frac{j\omega 10}{(2+j\omega)(5+j\omega)}}$

(e) $\int_{-\infty}^{t} f(t)dt \longrightarrow \frac{F(\omega)}{j(\omega)}+\pi F(0)\delta(\omega)$

$$=\frac{10}{j\omega(2+j\omega)(5+j\omega)}+\pi\delta(\omega)\frac{x10}{2x5}$$

$$=\mathbf{\frac{10}{j\omega(2+j\omega)(5+j\omega)}+\pi\delta(\omega)}$$

www.konkur.in

Chapter 18, Solution 24.

(a) $X(\omega) = F(\omega) + F[3]$

$$= \mathbf{6\pi\delta(\omega) + \frac{j}{\omega}\left(e^{-j\omega} - 1\right)}$$

(b) $y(t) = f(t-2)$

$$Y(\omega) = e^{-j\omega 2}F(\omega) = \mathbf{\frac{je^{-j2\omega}}{\omega}\left(e^{-j\omega} - 1\right)}$$

(c) If $h(t) = f'(t)$

$$H(\omega) = j\omega F(\omega) = j\omega\frac{j}{\omega}\left(e^{-j\omega} - 1\right) = \mathbf{1 - e^{-j\omega}}$$

(d) $g(t) = 4f\left(\frac{2}{3}t\right) + 10f\left(\frac{5}{3}t\right)$, $G(\omega) = 4x\frac{3}{2}F\left(\frac{3}{2}\omega\right) + 10x\frac{3}{5}F\left(\frac{3}{5}\omega\right)$

$$= 6\cdot\frac{j}{\frac{3}{2}\omega}\left(e^{-j3\omega/2} - 1\right) + \frac{6j}{\frac{3}{5}\omega}\left(e^{-j3\omega/5} - 1\right)$$

$$= \mathbf{\frac{j4}{\omega}\left(e^{-j3\omega/2} - 1\right) + \frac{j10}{\omega}\left(e^{-j3\omega/5} - 1\right)}$$

www.konkur.in

Chapter 18, Solution 25.

(a) g(t) = $\mathbf{5e^{2t}u(t)}$
(b) h(t) = $\mathbf{6e^{-2t}}$
(c) $X(\omega) = \dfrac{A}{s-1} + \dfrac{B}{s-2}, \qquad s = j\omega$

$$A = \frac{10}{1-2} = -10, \qquad B = \frac{10}{2-1} = 10$$

$$X(\omega) = \frac{-10}{j\omega - 1} + \frac{10}{j\omega - 2}$$

x(t) = $\mathbf{(-10e^{t}u(t)+10e^{2t})u(t)}$

(a) $\mathbf{5e^{2t}u(t)}$**, (b)** $\mathbf{6e^{-2t}}$ **, (c)** $\mathbf{(-10e^{t}u(t)+10e^{2t})u(t)}$

www.konkur.in

Chapter 18, Solution 26.

(a) $\underline{\mathbf{f(t) = e^{-(t-2)}u(t)}}$

(b) $\underline{\mathbf{h(t) = te^{-4t}u(t)}}$

(c) If $\mathbf{x(t) = u(t+1) - u(t-1)} \longrightarrow \mathbf{X(\omega) = 2\dfrac{\sin\omega}{\omega}}$

By using duality property,

$$\mathbf{G(\omega) = 2u(\omega+1) - 2u(\omega-1)} \longrightarrow \underline{\mathbf{g(t) = \frac{2\sin t}{\pi t}}}$$

www.konkur.in

Chapter 18, Solution 27.

(a) Let $F(s) = \dfrac{100}{s(s+10)} = \dfrac{A}{s} + \dfrac{B}{s+10}, \quad s = j\omega$

$$A = \frac{100}{10} = 10, \;\; B = \frac{100}{-10} = -10$$

$$F(\omega) = \frac{10}{j\omega} - \frac{10}{j\omega + 10}$$

$$f(t) = \mathbf{(5\,sgn(t) - 10e^{-10t})u(t)}$$

(b) $G(s) = \dfrac{10s}{(2-s)(3+s)} = \dfrac{A}{2-s} + \dfrac{B}{s+3}, \quad s = j\omega$

$$A = \frac{20}{5} = 4, \quad B = \frac{-30}{5} = -6$$

$$G(\omega) = \frac{4}{= -j\omega + 2} - \frac{6}{j\omega + 3}$$

$$g(t) = \mathbf{4e^{2t}u(-t) - 6e^{-3t}u(t)}$$

(c) $H(\omega) = \dfrac{60}{(j\omega)^2 + j40\omega + 1300} = \dfrac{60}{(j\omega + 20)^2 + 900}$

$$h(t) = \mathbf{2e^{-20t}\sin(30t)u(t)}$$

(d) $y(t) = \dfrac{1}{2\pi}\displaystyle\int_{-\infty}^{\infty} \dfrac{\delta(\omega)e^{j\omega t}d\omega}{(2 + j\omega)(j\omega + 1)} = \dfrac{1}{2}\pi \cdot \dfrac{1}{2} = \mathbf{\dfrac{1}{4}\pi}$

www.konkur.in

Chapter 18, Solution 28.

(a) $$f(t) = \frac{1}{2\pi}\int_{-\infty}^{\infty} F(\omega)e^{j\omega t}\,d\omega = \frac{1}{2\pi}\int_{-\infty}^{\infty} \frac{\pi\delta(\omega)\,e^{j\omega t}}{(5+j\omega)(2+j\omega)}\,d\omega$$

$$= \frac{1}{2}\,\frac{1}{(5)(2)} = \frac{1}{20} = \mathbf{0.05}$$

(b) $$f(t) = \frac{1}{2\pi}\int_{-\infty}^{\infty} \frac{10\delta(\omega+2)}{j\omega(j\omega+1)}e^{j\omega t}\,d\omega = \frac{10}{2\pi}\,\frac{e^{-j2t}}{(-j2)(-j2+1)}$$

$$= \frac{j5}{2\pi}\,\frac{e^{-j2t}}{1-j2} = \frac{\mathbf{(-2+j)e^{-j2t}}}{\mathbf{2\pi}}$$

(c) $$f(t) = \frac{1}{2\pi}\int_{-\infty}^{\infty} \frac{20\delta(\omega-1)e^{j\omega t}}{(2+j\omega)(3+5\omega)}\,d\omega = \frac{20}{2\pi}\,\frac{e^{jt}}{(2+j)(3+j)}$$

$$= \frac{20e^{jt}}{2\pi(5+5j)} = \frac{\mathbf{(1-j)e^{jt}}}{\boldsymbol{\pi}}$$

(d) Let $$F(\omega) = \frac{5\pi\delta(\omega)}{(5+j\omega)} + \frac{5}{j\omega(5+j\omega)} = F_1(\omega) + F_2(\omega)$$

$$f_1(t) = \frac{1}{2\pi}\int_{-\infty}^{\infty} \frac{5\pi\delta(\omega)}{5+j\omega}e^{j\omega t}\,d\omega = \frac{5\pi}{2\pi}\cdot\frac{1}{5} = 0.5$$

$$F_2(s) = \frac{5}{s(5+s)} = \frac{A}{s} + \frac{B}{s+5}\ ,\ A = 1, B = -1$$

$$F_2(\omega) = \frac{1}{j\omega} - \frac{1}{j\omega+5}$$

$$f_2(t) = \frac{1}{2}\mathrm{sgn}(t) - e^{-5t} = -\frac{1}{2} + u(t) - e^{5t}$$

$$f(t) = f_1(t) + f_2(t) = \mathbf{u(t) - e^{-5t}}$$

www.konkur.in

Chapter 18, Solution 29.

(a) $f(t) = F^{-1}[\delta(\omega)] + F^{-1}\left[4\delta(\omega+3) + 4\delta(\omega-3)\right]$

$$= \frac{1}{2\pi} + \frac{4\cos 3t}{\pi} = \mathbf{\frac{1}{2\pi}\left(1 + 8\cos 3t\right)}$$

(b) If $h(t) = u(t+2) - u(t-2)$

$$H(\omega) = \frac{2\sin 2\omega}{\omega}$$

$$G(\omega) = 4H(\omega) \longrightarrow g(t) = \frac{1}{2\pi}\cdot\frac{8\sin 2t}{t}$$

$$g(t) = \mathbf{\frac{4\sin 2t}{\pi t}}$$

(c) Since

$$\cos(at) \square \pi\delta(\omega + a) + \pi\delta(\omega - a)$$

Using the reversal property,

$$2\pi\cos 2\omega \leftrightarrow \pi\delta(t+2) + \pi\delta(t-2)$$

or $F^{-1}\left[6\cos 2\omega\right] = \mathbf{3\delta(t+2) + 3\delta(t-2)}$

www.konkur.in

Chapter 18, Solution 30.

(a) $y(t) = \text{sgn}(t) \longrightarrow Y(\omega) = \dfrac{2}{j\omega}, \quad X(\omega) = \dfrac{1}{a + j\omega}$

$$\mathbf{H(\omega) = \frac{Y(\omega)}{X(\omega)} = \frac{2(a + j\omega)}{j\omega} = 2 + \frac{2a}{j\omega} \longrightarrow \underline{h(t) = 2\delta(t) + a[u(t) - u(-t)]}}$$

(b) $X(\omega) = \dfrac{1}{1 + j\omega}, \quad Y(\omega) = \dfrac{1}{2 + j\omega}$

$$\mathbf{H(\omega) = \frac{1 + j\omega}{2 + j\omega} = 1 - \frac{1}{2 + j\omega} \longrightarrow \underline{h(t) = \delta(t) - e^{-2t}u(t)}}$$

(c) In this case, by definition, $\underline{\mathbf{h(t) = \quad y(t) = e^{-at}\sin bt\, u(t)}}$

www.konkur.in

Chapter 18, Solution 31.

(a) $$Y(\omega) = \frac{1}{(a + j\omega)^2}, \qquad H(\omega) = \frac{1}{a + j\omega}$$

$$\mathbf{X(\omega) = \frac{Y(\omega)}{H(\omega)} = \frac{1}{a + j\omega} \longrightarrow \underline{x(t) = e^{-at}u(t)}}$$

(b) By definition, $\underline{\mathbf{x(t) = y(t) = u(t+1) - u(t-1)}}$

(c) $$Y(\omega) = \frac{1}{(a + j\omega)}, \qquad H(\omega) = \frac{2}{j\omega}$$

$$\mathbf{X(\omega) = \frac{Y(\omega)}{H(\omega)} = \frac{j\omega}{2(a + j\omega)} = \frac{1}{2} - \frac{a}{2(a + j\omega)} \longrightarrow \underline{x(t) = \frac{1}{2}\delta(t) - \frac{a}{2}e^{-at}u(t)}}$$

www.konkur.in

Chapter 18, Solution 32.

(a) Since $\dfrac{e^{-j\omega}}{j\omega+1}$ $\quad e^{-(t-1)}u(t-1)$

and $F(-\omega)$ $\longrightarrow$ $f(-t)$

$F_1(\omega)=\dfrac{e^{j\omega}}{-j\omega+1}$ $\longrightarrow$ $f_1(t)=e^{-(-t-1)}u(-t-1)$

$f_1(t) = \mathbf{e^{(t+1)}u(-t-1)}$

(b) From Section 17.3,

$\dfrac{2}{t^2+1}$ $\longrightarrow$ $2\pi e^{-|\omega|}$

If $F_2(\omega)=2e^{-|\omega|}$, then

$f_2(t) = \mathbf{\dfrac{2}{\pi(t^2+1)}}$

(b) By partial fractions

$$F_3(\omega)=\frac{1}{(j\omega+1)^2(j\omega-1)^2}=\frac{\frac{1}{4}}{(j\omega+1)^2}+\frac{\frac{1}{4}}{(j\omega+1)}+\frac{\frac{1}{4}}{(j\omega-1)^2}-\frac{\frac{1}{4}}{j\omega-1}$$

Hence $f_3(t)=\dfrac{1}{4}\left(te^{-t}+e^{-t}+te^{t}-e^{t}\right)u(t)$

$= \mathbf{\dfrac{1}{4}(t+1)e^{-t}u(t)+\dfrac{1}{4}(t-1)e^{t}u(t)}$

(d) $f_4(t)=\dfrac{1}{2\pi}\displaystyle\int_{-\infty}^{\infty}F_1(\omega)e^{j\omega t}\,d\omega=\dfrac{1}{2\pi}\int_{-\infty}^{\infty}\dfrac{\delta(\omega)e^{j\omega t}}{1+j2\omega}$ $= \mathbf{\dfrac{1}{2\pi}}$

www.konkur.in

Chapter 18, Solution 33.

(a) Let $x(t) = 2\sin \pi t[u(t+1) - u(t-1)]$

From Problem 17.9(b),

$$X(\omega) = \frac{4j\pi \sin \omega}{\pi^2 - \omega^2}$$

Applying duality property,

$$f(t) = \frac{1}{2\pi} X(-t) = \frac{2j\sin(-t)}{\pi^2 - t^2}$$

$$f(t) = \mathbf{\frac{2j\sin t}{t^2 - \pi^2}}$$

(b) $F(\omega) = \frac{j}{\omega}(\cos 2\omega - j\sin 2\omega) - \frac{j}{\omega}(\cos \omega - j\sin \omega)$

$$= \frac{j}{\omega}\left(e^{j2\omega} - e^{-j\omega}\right) = \frac{e^{-j\omega}}{j\omega} - \frac{e^{j2\omega}}{j\omega}$$

$$f(t) = \frac{1}{2}\text{sgn}(t-1) - \frac{1}{2}\text{sgn}(t-2)$$

But $\text{sgn}(t) = 2u(t) - 1$

$$f(t) = u(t-1) - \frac{1}{2} - u(t-2) + \frac{1}{2}$$

$$= \mathbf{u(t-1) - u(t-2)}$$

www.konkur.in

Chapter 18, Solution 34.

First, we find G(ω) for g(t) shown below.

$$g(t) = 10[u(t+2) - u(t-2)] + 10[u(t+1) - u(t-1)]$$
$$g'(t) = 10[\delta(t+2) - \delta(t-2)] + 10[\delta(t+1) - \delta(t-1)]$$

The Fourier transform of each term gives

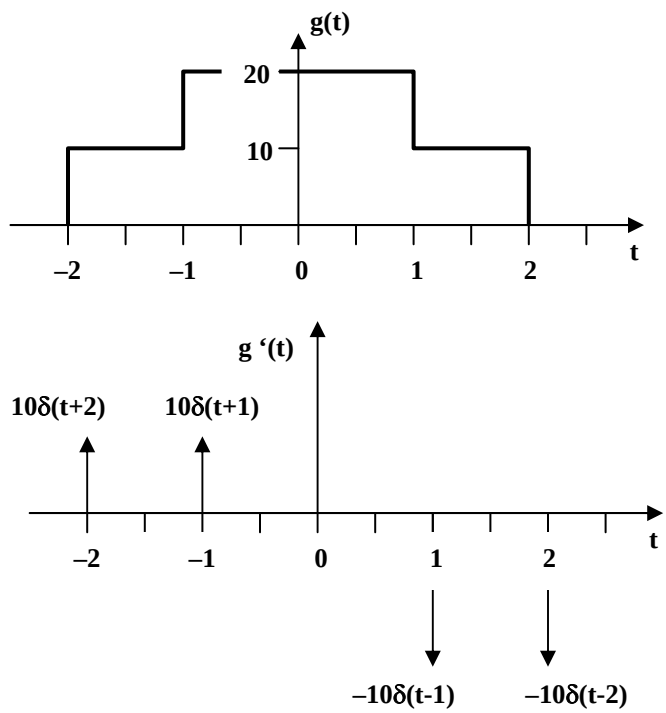

$$j\omega G(\omega) = 10\left(e^{j\omega 2} - e^{-j\omega 2}\right) + 10\left(e^{j\omega} - e^{-j\omega}\right)$$
$$= 20j\sin 2\omega + 20j\sin\omega$$
$$G(\omega) = \frac{20\sin 2\omega}{\omega} + \frac{20\sin\omega}{\omega} = 40\ \text{sinc}(2\omega) + 20\ \text{sinc}(\omega)$$

Note that G(ω) = G(-ω).

$$F(\omega) = 2\pi G(-\omega)$$
$$f(t) = \frac{1}{2\pi} G(t)$$
$$= \mathbf{(20/\pi)sinc(2t) + (10/\pi)sinc(t)}$$

www.konkur.in

Chapter 18, Solution 35.

(a) x(t) = f[3(t-1/3)]. Using the scaling and time shifting properties,

$$\mathbf{X(\omega) = \frac{1}{3}\frac{1}{2 + j\omega/3}e^{-j\omega/3} = \underline{\frac{e^{-j\omega/3}}{(6 + j\omega)}}}$$

(b) Using the modulation property,

$$\mathbf{Y(\omega) = \frac{1}{2}[F(\omega + 5) + F(\omega - 5)] = \underline{\frac{1}{2}\left[\frac{1}{2 + j(\omega + 5)} + \frac{1}{2 + j(\omega - 5)}\right]}}$$

(c)

$$\mathbf{Z(\omega) = j\omega F(\omega) = \underline{\frac{j\omega}{2 + j\omega}}}$$

(d)

$$\mathbf{H(\omega) = F(\omega)F(\omega) = \underline{\frac{1}{(2 + j\omega)^2}}}$$

(e)

$$\mathbf{I(\omega) = j\frac{d}{d\omega}F(\omega) = j\frac{(0 - j)}{(2 + j\omega)^2} = \underline{\frac{1}{(2 + j\omega)^2}}}$$

www.konkur.in

Chapter 18, Solution 36.

$$H(\omega) = \frac{Y(\omega)}{X(\omega)} \quad \longrightarrow \quad Y(\omega) = H(\omega)X(\omega)$$

$$x(t) = v_s(t) = e^{-4t}u(t) \quad \longrightarrow \quad X(\omega) = \frac{1}{4 + j\omega}$$

$$Y(\omega) = \frac{2}{(j\omega + 2)(4 + j\omega)} = \frac{2}{(s+2)(s+4)}, \qquad s = j\omega$$

$$Y(s) = \frac{A}{s+2} + \frac{B}{s+4}$$

$$A = \frac{2}{-2+4} = 1, \qquad B = \frac{2}{-4+2} = -1$$

$$Y(s) = \frac{1}{s+2} - \frac{1}{s+4}$$

$$\underline{y(t) = \left(e^{-2t} - e^{-4t}\right)u(t)}$$

Please note, the units are not known since the transfer function does not give them. If the transfer function was a voltage gain then the units on y(t) would be volts.

www.konkur.in

Chapter 18, Solution 37.

$$2 \| j\omega = \frac{j2\omega}{2 + j\omega}$$

By current division,

$$H(\omega) = \frac{I_o(\omega)}{I_s(\omega)} = \frac{\dfrac{j2\omega}{2 + j\omega}}{4 + \dfrac{j2\omega}{2 + j\omega}} = \frac{j2\omega}{j2\omega + 8 + j4\omega}$$

$$H(\omega) = \frac{\mathbf{j\omega}}{\mathbf{4 + j3\omega}}$$

www.konkur.in

Chapter 18, Solution 38.

Using Fig. 18.40, design a problem to help other students to better understand using Fourier transforms to do circuit analysis.

Although there are many ways to solve this problem, this is an example based on the same kind of problem asked in the third edition.

Problem

Suppose $v_s(t) = u(t)$ for t>0. Determine i(t) in the circuit of Fig. 18.40 using Fourier transform.

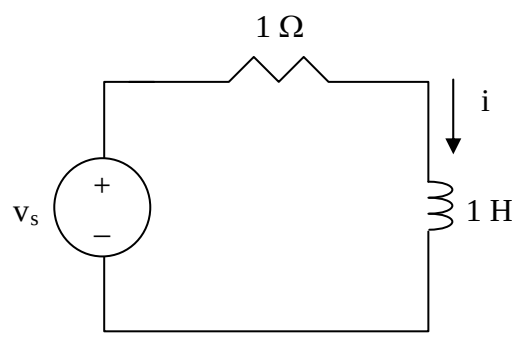

Figure 18.40 For Prob. 18.38.

Solution

$$V_s = \pi\delta(\omega) + \frac{1}{j\omega}$$

$$I(\omega) = \frac{V_s}{1+j\omega} = \frac{1}{1+j\omega}\left(\pi\delta(\omega) + \frac{1}{j\omega}\right)$$

Let $I(\omega) = I_1(\omega) + I_2(\omega) = \dfrac{\pi\delta(\omega)}{1+j\omega} + \dfrac{1}{j\omega(1+j\omega)}$

$$I_2(\omega) = \frac{1}{j\omega(1+j\omega)} = \frac{A}{s} + \frac{B}{s+1}, \qquad s = j\omega$$

where $A = \dfrac{1}{1} = 1, \qquad B = \dfrac{1}{-1} = -1$

$$I_2(\omega) = \frac{1}{j\omega} + \frac{-1}{j\omega+1} \qquad \longrightarrow \qquad i_2(t) = \frac{1}{2}\text{sgn}(t) - e^{-t}$$

$$I_1(\omega) = \frac{\pi\delta(\omega)}{1+j\omega}$$

www.konkur.in

$$i_1(t) = \frac{1}{2\pi}\int_{-\infty}^{\infty} \frac{\pi\delta(\omega)}{1+j\omega} e^{j\omega t} d\omega = \frac{1}{2}\frac{e^{j\omega t}}{1+j\omega}\bigg|_{\omega=0} = \frac{1}{2}$$

Hence,

$$i(t) = i_1(t) + i_2(t) = \underline{\frac{1}{2} + \frac{1}{2}\text{sgn}(t) - e^{-t}}$$

www.konkur.in

Chapter 18, Solution 39.

$$V_s(\omega) = \int_{-\infty}^{\infty} (1-t)e^{-j\omega t}dt = \frac{1}{j\omega} + \frac{1}{\omega^2} - \frac{1}{\omega^2}e^{-j\omega}$$

$$\mathbf{I(\omega) = \frac{V_s(\omega)}{10^3 + j\omega x 10^{-3}} = \underline{\frac{10^3}{10^6 + j\omega}\left(\frac{1}{j\omega} + \frac{1}{\omega^2} - \frac{1}{\omega^2}e^{-j\omega}\right)}}$$

www.konkur.in

Chapter 18, Solution 40.

$$\ddot{v}(t) = \delta(t) - 2\delta(t-1) + \delta(t-2)$$
$$-\omega^2 V(\omega) = 1 - 2e^{-j\omega} + e^{j\omega 2}$$
$$V(\omega) = \frac{1 - 2e^{-j\omega} + e^{-j\omega 2}}{-\omega^2}$$

Now $$Z(\omega) = 2 + \frac{1}{j\omega} = \frac{1 + j2\omega}{j\omega}$$

$$I = \frac{V(\omega)}{Z(\omega)} = \frac{2e^{j\omega} - e^{j\omega 2} - 1}{\omega^2} \cdot \frac{j\omega}{1 + j2\omega}$$
$$= \frac{1}{j\omega(0.5 + j\omega)}\left(0.5 + 0.5e^{-j\omega 2} - e^{-j\omega}\right)$$

But $$\frac{1}{s(s+0.5)} = \frac{A}{s} + \frac{B}{s+0.5} \longrightarrow A = 2,\ B = -2$$

$$I(\omega) = \frac{2}{j\omega}\left(0.5 + 0.5e^{j\omega 2} - e^{-j\omega}\right) - \frac{2}{0.5 + j\omega}\left(0.5 + 0.5e^{-j\omega 2} - e^{-j\omega}\right)$$

$$i(t) = \mathbf{\frac{1}{2}sgn(t) + \frac{1}{2}sgn(t-2) - sgn(t-1) - e^{-0.5t}u(t) - e^{-0.5(t-2)}u(t-2) - 2e^{-0.5(t-1)}u(t-1)}$$

www.konkur.in

Chapter 18, Solution 41.

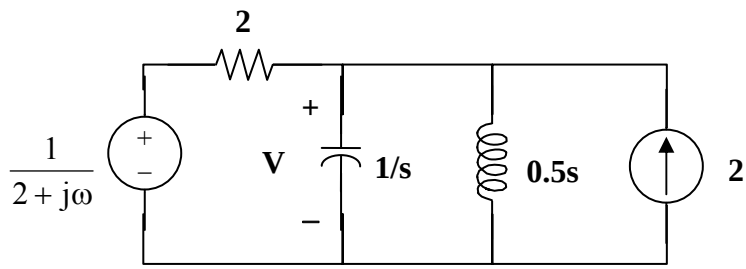

$$\frac{V - \dfrac{1}{2 + j\omega}}{2} + j\omega V + \frac{2V}{j\omega} - 2 = 0$$

$$\left(j\omega - 2\omega^2 + 4\right)V = j4\omega + \frac{j\omega}{2 + j\omega} = \frac{-4\omega^2 + j9\omega}{2 + j\omega}$$

$$V(\omega) = \frac{\mathbf{2j\omega(4.5 + j2\omega)}}{\mathbf{(2 + j\omega)(4 - 2\omega^2 + j\omega)}}$$

Chapter 18, Solution 42.

By current division, $I_o = \dfrac{2}{2+j\omega} \cdot I(\omega)$

(a) For i(t) = 5 sgn (t),

$$I(\omega) = \frac{10}{j\omega}$$

$$I_o = \frac{2}{2+j\omega} \cdot \frac{10}{j\omega} = \frac{20}{j\omega(2+j\omega)}$$

Let $I_o = \dfrac{20}{s(s+2)} = \dfrac{A}{s} + \dfrac{B}{s+2}$, $A = 10$, $B = -10$

$$I_o(\omega) = \frac{10}{j\omega} - \frac{10}{2+j\omega}$$

$$i_o(t) = \mathbf{5\,sgn(t) - 10e^{-2t}u(t)A}$$

(b)

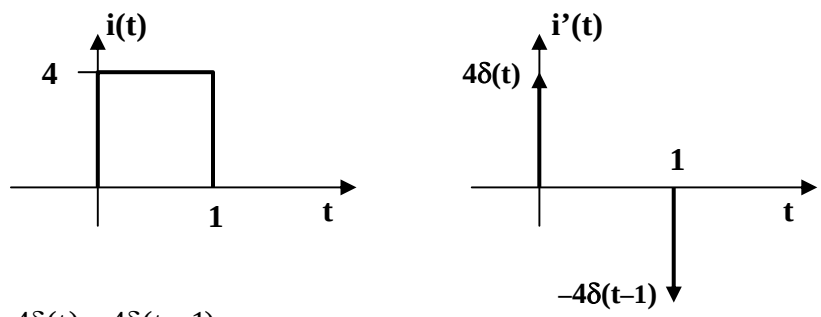

$$i'(t) = 4\delta(t) - 4\delta(t-1)$$

$$j\omega I(\omega) = 4 - 4e^{-j\omega}$$

$$I(\omega) = \frac{4(1-e^{-j\omega})}{j\omega}$$

$$I_o = \frac{8(1-e^{-j\omega})}{j\omega(2+j\omega)} = 4\left(\frac{1}{j\omega} - \frac{1}{2+j\omega}\right)(1-e^{-j\omega})$$

$$= \frac{4}{j\omega} - \frac{4}{2+j\omega} - \frac{4e^{-j\omega}}{j\omega} + \frac{4e^{-j\omega}}{2+j\omega}$$

$$i_o(t) = \mathbf{2\,sgn(t) - 2\,sgn(t-1) - 4e^{-2t}u(t) + 4e^{-2(t-1)}u(t-1)A}$$

www.konkur.in

Chapter 18, Solution 43.

$$20\,\text{mF} \longrightarrow \frac{1}{j\omega C} = \frac{1}{j20x10^{-3}\omega} = \frac{50}{j\omega}, \quad i_s = 5e^{-t} \longrightarrow I_s = \frac{5}{1+j\omega}$$

$$V_o = \frac{40}{40+\frac{50}{j\omega}} I_s \bullet \frac{50}{j\omega} = \frac{250}{(s+1)(s+1.25)}, \quad s = j\omega$$

$$V_o = \frac{A}{s+1} + \frac{B}{s+1.25} = 1000\left[\frac{1}{s+1} - \frac{1}{s+1.25}\right]$$

$$\mathbf{v_o(t) = \underline{1(e^{-1t} - e^{-1.25t})u(t)\ kV}}$$

www.konkur.in

Chapter 18, Solution 44.

$$1\text{H} \longrightarrow j\omega$$

We transform the voltage source to a current source as shown in Fig. (a) and then combine the two parallel 2Ω resistors, as shown in Fig. (b).

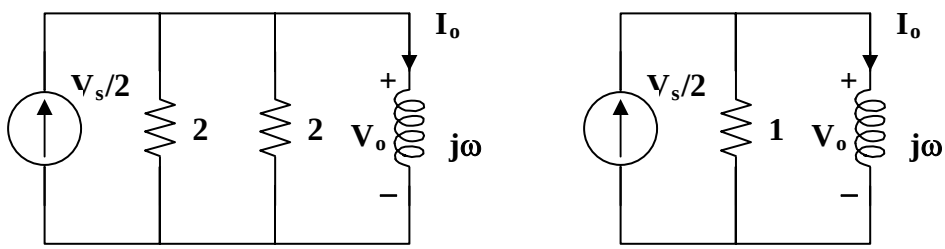

(a) **(b)**

$$2\|2 = 1\Omega, \quad I_o = \frac{1}{1+j\omega}\cdot\frac{V_s}{2}$$

$$V_o = j\omega I_o = \frac{j\omega V_s}{2(1+j\omega)}$$

$$\ddot{v}_s(t) = 10\delta(t) - 10\delta(t-2)$$

$$j\omega V_s(\omega) = 10 - 10e^{-j2\omega}$$

$$V_s(\omega) = \frac{10\left(1-e^{-j2\omega}\right)}{j\omega}$$

Hence $V_o = \dfrac{5\left(1-e^{-j2\omega}\right)}{1+j\omega} = \dfrac{5}{1+j\omega} - \dfrac{5}{1+j\omega}e^{-j2\omega}$

$$v_o(t) = 5e^{-t}u(t) - 5e^{-(t-2)}u(t-2)$$

$$v_o(1) = 5e^{-1} - 0 = \mathbf{1.839\ V}$$

www.konkur.in

Chapter 18, Solution 45.

We may convert the voltage source to a current source as shown below.

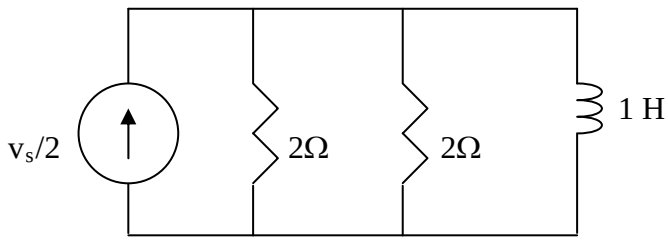

Combining the two 2-Ω resistors gives 1 Ω. The circuit now becomes that shown below.

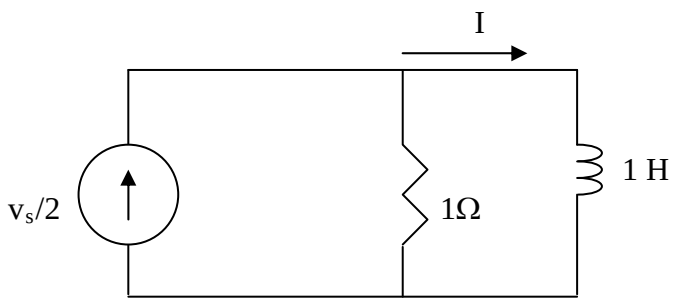

$$I = \frac{1}{1+j\omega} \bullet \frac{V_s}{2} = \frac{1}{1+j\omega} \bullet \frac{5}{2+j\omega} = \frac{5}{(s+1)(s+2)}, \qquad s = j\omega$$

$$= \frac{A}{s+1} + \frac{B}{s+2}$$

where $A = 5/1 = 5, \qquad B = 5/-1 = -5$

$$I = \frac{5}{s+1} - \frac{5}{s+2}$$

$$i(t) = \underline{5(e^{-t} - e^{-2t})u(t)}\,\text{A}$$

www.konkur.in

Chapter 18, Solution 46.

$$\frac{1}{4}F \longrightarrow \frac{1}{j\omega\frac{1}{4}} = \frac{-j4}{\omega}$$

$$2H \longrightarrow j\omega 2$$

$$3\delta(t) \longrightarrow 3$$

$$e^{-t}u(t) \longrightarrow \frac{1}{1+j\omega}$$

The circuit in the frequency domain is shown below:

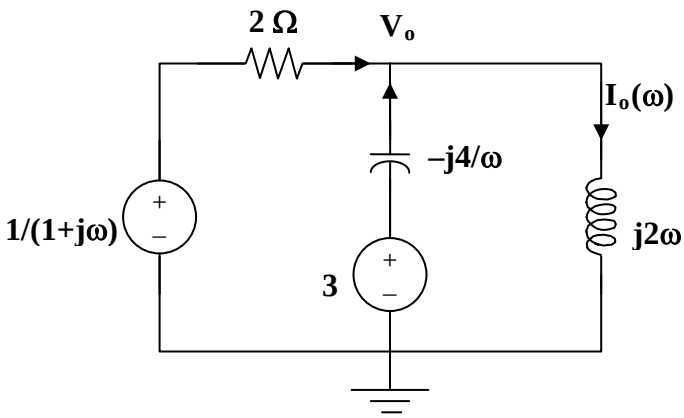

At node V_o, KCL gives

$$\frac{\frac{1}{1+j\omega} - V_o}{2} + \frac{3 - V_o}{\frac{-j4}{\omega}} = \frac{V_o}{j2\omega}$$

$$\frac{2}{1+j\omega} - 2V_o + j\omega 3 - j\omega V_o = -\frac{j2V_o}{\omega}$$

$$V_o = \frac{\frac{2}{1+j\omega} + j\omega 3}{2 + j\omega - \frac{j2}{\omega}}$$

$$I_o(\omega) = \frac{V_o}{j2\omega} = \frac{\frac{2 + j\omega 3 - 3\omega^2}{1+j\omega}}{j2\omega\left(2 + j\omega - \frac{j2}{\omega}\right)}$$

$$I_o(\omega) = \frac{\mathbf{2 + j\omega^2 - 3\omega^2}}{\mathbf{4 - 6\omega^2 + j(8\omega - 2\omega^3)}}$$

www.konkur.in

Chapter 18, Solution 47.

$$\frac{1}{2}F \quad \longrightarrow \quad \frac{1}{j\omega C} = \frac{2}{j\omega}$$

$$I_o = \frac{1}{1+\frac{2}{j\omega}} I_s$$

$$V_o = \frac{2}{j\omega} I_o = \frac{\frac{2}{j\omega}}{1+\frac{2}{j\omega}} I_s = \frac{2}{2+j\omega}\frac{8}{1+j\omega}$$

$$= \frac{16}{(s+1)(s+2)}, \; s = j\omega$$

$$= \frac{A}{s+1} + \frac{B}{s+2}$$

where A = 16/1 = 16, B = 16/(–1) = –16

Thus,

$$v_o(t) = \mathbf{16(e^{-t} - e^{-2t})u(t)\ V.}$$

www.konkur.in

Chapter 18, Solution 48.

$$0.2F \longrightarrow \frac{1}{j\omega C} = -\frac{j5}{\omega}$$

As an integrator,

$$RC = 20\,x\,10^3\,x\,20\,x\,10^{-6} = 0.4$$

$$v_o = -\frac{1}{RC}\int_o^t v_i\,dt$$

$$V_o = -\frac{1}{RC}\left[\frac{V_i}{j\omega} + \pi V_i(0)\delta(\omega)\right]$$

$$= -\frac{1}{0.4}\left[\frac{2}{j\omega(2+j\omega)} + \pi\delta(\omega)\right]$$

$$I_o = \frac{V_o}{20}mA = -0.125\left[\frac{2}{j\omega(2+j\omega)} + \pi\delta(\omega)\right]$$

$$= -\frac{0.125}{j\omega} + \frac{0.125}{2+j\omega} - 0.125\pi\delta(\omega)$$

$$i_o(t) = -0.125\,sgn(t) + 0.125e^{-2t}u(t) - \frac{0.125}{2\pi}\int \pi\delta(\omega)e^{j\omega t}dt$$

$$= 0.125 + 0.25u(t) + 0.125e^{-2t}u(t) - \frac{0.125}{2}$$

$$i_o(t) = \mathbf{[0.625 - 0.25u(t) + 0.125e^{-2t}u(t)]mA}$$

www.konkur.in

Chapter 18, Solution 49.

Consider the circuit shown below:

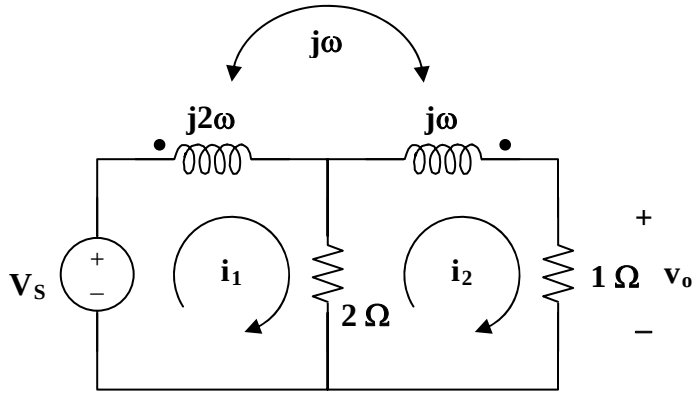

$$V_s = \pi[\delta(\omega+1)+\delta(\omega-2)]$$

For mesh 1, $-V_s + (2+j2\omega)I_1 - 2I_2 - j\omega I_2 = 0$

$$V_s = 2(1+j\omega)I_1 - (2+j\omega)I_2 \qquad (1)$$

For mesh 2, $0 = (3+j\omega)I_2 - 2I_1 - j\omega I_1$

$$I_1 = \frac{(3+\omega)I_2}{(2+\omega)} \qquad (2)$$

Substituting (2) into (1) gives

$$V_s = 2\frac{2(1+j\omega)(3+j\omega)I_2}{2+j\omega} - (2+j\omega)I_2$$

$$V_s(2+\omega) = \left[2(3+j4\omega-\omega^2)-(4+j4\omega-\omega^2)\right]I_2$$

$$= I_2(2+j4\omega-\omega^2)$$

$$I_2 = \frac{(s+2)V_s}{s^2+4s+2},\ s = j\omega$$

$$V_o = I_2 = \frac{(j\omega+2)\pi[\delta(\omega+1)+\delta(\omega-1)]}{(j\omega)^2+j\omega4+2}$$

$$v_o(t) = \frac{1}{2\pi}\int_{-\infty}^{\infty} v_o(\omega)e^{j\omega t}d\omega$$

$$= \int_{-\infty}^{\infty} \frac{\frac{1}{2}(j\omega+2)e^{j\omega t}\delta(\omega+1)d\omega}{(j\omega)^2+j\omega4+2} + \frac{\frac{1}{2}(j\omega+2)e^{j\omega t}\delta(\omega-1)d\omega}{(j\omega)^2+j\omega4+2}$$

www.konkur.in

$$= \frac{\frac{1}{2}(-j+2)e^{jt}}{-1-j4+2} + \frac{\frac{1}{2}(j+2)e^{jt}}{-1+j4+2}$$

$$v_o(t) = \frac{\frac{1}{2}(2-j)(1+j4)}{17}e^{jt} + \frac{\frac{1}{2}(2-j)(1-j4)e^{jt}}{17}$$

$$= \frac{1}{34}(6+j7)e^{jt} + \frac{1}{34}(6-j7)e^{jt}$$

$$= 0.271e^{-j(t-13.64°)} + 0.271e^{j(t-13.64°)}$$

$$v_o(t) = \mathbf{542\cos(t-13.64°)\,mV}$$

www.konkur.in

Chapter 18, Solution 50.

Consider the circuit shown below:

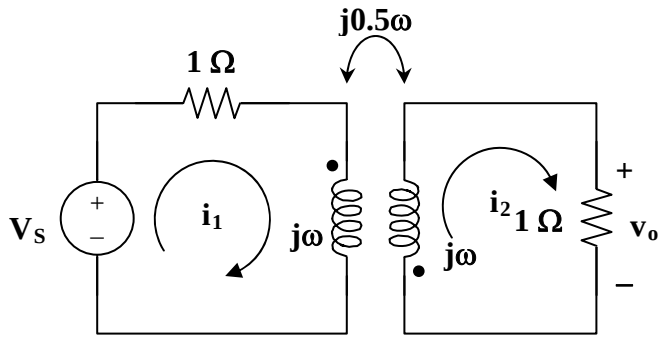

For loop 1,

$$-2+(1+j\omega)I_1+j0.5\omega I_2=0 \qquad (1)$$

For loop 2,

$$(1+j\omega)I_2+j0.5\omega I_1=0 \qquad (2)$$

From (2),

$$I_1=\frac{(1+j\omega)I_2}{-j0.5\omega}=-2\frac{(1+j\omega)I_2}{j\omega}$$

Substituting this into (1),

$$2=\frac{-2(1+j\omega)I_2}{j\omega}+\frac{j\omega}{2}I_2$$

$$2j\omega=-\left(4+j4\omega-\frac{3}{2}\omega^2\right)I_2$$

$$I_2=\frac{2j\omega}{4+j4\omega-1.5\omega^2}$$

$$V_o=I_2=\frac{-2j\omega}{4+j4\omega+1.5(j\omega)^2}$$

$$V_o=\frac{\frac{4}{3}j\omega}{\frac{8}{3}+j\frac{8\omega}{3}+(j\omega)^2}$$

$$=\frac{-4\left(\frac{4}{3}+j\omega\right)}{\left(\frac{4}{3}+j\omega\right)^2+\left(\frac{\sqrt{8}}{3}\right)^2}+\frac{\frac{16}{3}}{\left(\frac{4}{3}+j\omega\right)^2+\left(\frac{\sqrt{8}}{3}\right)^2}$$

$$V_o(t)=\mathbf{-4e^{-4t/3}\cos\left(\frac{\sqrt{8}}{3}t\right)u(t)+5.657e^{-4t/3}\sin\left(\frac{\sqrt{8}}{3}t\right)u(t)\,V}$$

www.konkur.in

Chapter 18, Solution 51.

In the frequency domain, the voltage across the 2-Ω resistor is

$$V(\omega) = \frac{2}{2+j\omega}V_s = \frac{2}{2+j\omega}\bullet\frac{10}{1+j\omega} = \frac{20}{(s+1)(s+2)}, \qquad s = j\omega$$

$$V(s) = \frac{A}{s+1} + \frac{B}{s+2}$$

$$A = 20/1 = 20, \qquad B = 20/-1 = -20$$

$$V(\omega) = \frac{20}{j\omega+1} - \frac{20}{j\omega+2}$$

$$v(t) = \left(20e^{-t} - 20e^{-2t}\right)u(t)$$

$$\mathrm{W} = \frac{1}{2}\int_0^\infty \mathrm{v}^2(\mathrm{t})\mathrm{dt} = 0.5\int 400\left(\mathrm{e}^{-2\mathrm{t}} + \mathrm{e}^{-4\mathrm{t}} - 3\mathrm{e}^{-3\mathrm{t}}\right)\mathrm{dt}$$

$$= 200\left(\frac{\mathrm{e}^{-2\mathrm{t}}}{-2} + \frac{\mathrm{e}^{-4\mathrm{t}}}{-4} - \frac{2\mathrm{e}^{-3\mathrm{t}}}{-3}\right)\Bigg|_0^\infty = \mathbf{16.667\ J}.$$

www.konkur.in

Chapter 18, Solution 52.

$$J = 2\int_0^\infty f^2(t)\,dt = \frac{1}{\pi}\int_0^\infty |F(\omega)|^2\,d\omega$$

$$= \frac{1}{\pi}\int_0^\infty \frac{1}{9^2+\omega^2}\,d\omega = \frac{1}{3\pi}\tan^{-1}(\omega/3)\Big|_0^\infty = \frac{1}{3\pi}\frac{\pi}{2} = \mathbf{(1/6)}$$

www.konkur.in

Chapter 18, Solution 53.

If $f(t) = e^{-2|t|}$, find $J = \int_{-\infty}^{\infty} |F(\omega)|^2 \, d\omega$.

$$J = \int_{-\infty}^{\infty} |F(\omega)|^2 \, d\omega = 2\pi \int_{-\infty}^{\infty} f^2(t)\, dt$$

$$f(t) = \begin{cases} e^{2t}, & t < 0 \\ e^{-2t}, & t > 0 \end{cases}$$

$$J = 2\pi\left[\int_{-\infty}^{0} e^{4t} dt + \int_{0}^{\infty} e^{-4t} dt\right] = 2\pi\left[\left.\frac{e^{4t}}{4}\right|_{-\infty}^{0} + \left.\frac{e^{-4t}}{-4}\right|_{0}^{\infty}\right] = 2\pi[(1/4) + (1/4)] = \boldsymbol{\pi}$$

www.konkur.in

Chapter 18, Solution 54.

Design a problem to help other students better understand finding the total energy in a given signal.

Although there are many ways to solve this problem, this is an example based on the same kind of problem asked in the third edition.

Problem

Given the signal $f(t) = 4\, e^{-t}\, u(t)$, what is the total energy in $f(t)$?

Solution

$$W_{1\Omega} = \int_{-\infty}^{\infty} f^2(t)\,dt = 16\int_0^{\infty} e^{-2t}dt = -8e^{-2t}\Big|_0^{\infty} = \mathbf{8\ J}$$

www.konkur.in

Chapter 18, Solution 55.

$f(t) = 5e^2e^{-t}u(t)$

$F(\omega) = 5e^2/(1 + j\omega), \ |F(\omega)|^2 = 25e^4/(1 + \omega^2)$

$$W_{1\Omega} = \frac{1}{\pi}\int_0^\infty |F(\omega)|^2 d\omega = \frac{25e^4}{\pi}\int_0^\infty \frac{1}{1+\omega^2} d\omega = \frac{25e^4}{\pi}\tan^{-1}(\omega)\Big|_0^\infty$$

$= 12.5e^4 = \mathbf{682.5\ J}$

or $$W_{1\Omega} = \int_{-\infty}^{\infty} f^2(t)\,dt = 25e^4\int_0^\infty e^{-2t}dt = 12.5e^4 = \mathbf{682.5\ J}$$

www.konkur.in

Chapter 18, Solution 56.

(a) $W = \int_{-\infty}^{\infty} V^2(t)dt = \int_0^{\infty} t^2 e^{-4t} dt = \frac{e^{-4t}}{(-4)^3}(16t^2 + 8t + 2)\Big|_0^{\infty} = \frac{2}{64} = \underline{0.0313 \text{ J}}$

(b) In the frequency domain,

$$V(\omega) = \frac{1}{(2 + j\omega)^2}$$

$$|V(\omega)|^2 = V(\omega)V^*(\omega) = \frac{1}{(4 + j\omega)^2}$$

$$W_o = \frac{1}{2\pi}\int_{-2}^{2} |V(\omega)|^2 d\omega = \frac{2}{2\pi}\int_0^2 \frac{1}{(4+\omega^2)^2} d\omega$$

$$= \frac{1}{\pi}\frac{1}{2\text{x}4}\left(\frac{\omega}{\omega^2 + 4} + 0.5\tan^{-1}(0.5\omega)\right)\Bigg|_0^2 = \frac{1}{32\pi} + \frac{1}{64} = 0.0256$$

$$\text{Fraction} = \frac{W_o}{W} = \frac{0.0256}{0.0313} = \underline{81.79\%}$$

www.konkur.in

Chapter 18, Solution 57.

$$W_{1\Omega} = \int_{-\infty}^{\infty} i^2(t)\,dt = \int_{-\infty}^{0} 4e^{2t}dt = 2e^{2t}\Big|_{-\infty}^{0} = \mathbf{2\ J} \text{ or}$$

$$I(\omega) = 2/(1 - j\omega), \quad |I(\omega)|^2 = 4/(1 + \omega^2)$$

$$W_{1\Omega} = \frac{1}{2\pi}\int_{-\infty}^{\infty}|I(\omega)|^2 d\omega = \frac{4}{2\pi}\int_{-\infty}^{\infty}\frac{1}{(1+\omega^2)}d\omega = \frac{4}{\pi}\tan^{-1}(\omega)\Big|_{0}^{\infty} = \frac{4}{\pi}\frac{\pi}{2} = \mathbf{2\ J}$$

In the frequency range, $-5 < \omega < 5$,

$$W = \frac{4}{\pi}\tan^{-1}\omega\Big|_{0}^{5} = \frac{4}{\pi}\tan^{-1}(5) = \frac{4}{\pi}(1.373) = 1.7487$$

$$W/W_{1\Omega} = 1.7487/2 = 0.8743 \text{ or}$$

87.43%

www.konkur.in

Chapter 18, Solution 58.

$\omega_m = 200\pi = 2\pi f_m$ which leads to $f_m = 100$ Hz

(a) $\omega_c = \pi x10^4 = 2\pi f_c$ which leads to $f_c = 10^4/2 =$ **5 kHz**

(b) lsb $= f_c - f_m = 5{,}000 - 100 =$ **4,900 Hz**

(c) usb $= f_c + f_m = 5{,}000 + 100 =$ **5,100 Hz**

www.konkur.in

Chapter 18, Solution 59.

$$H(\omega) = \frac{V_o(\omega)}{V_i(\omega)} = \frac{\frac{10}{2+j\omega} - \frac{6}{4+j\omega}}{2} = \frac{5}{2+j\omega} - \frac{3}{4+j\omega}$$

$$V_o(\omega) = H(\omega)V_i(\omega) = \left(\frac{5}{2+j\omega} - \frac{3}{4+j\omega}\right)\frac{4}{1+j\omega}$$

$$= \frac{20}{(s+1)(s+2)} - \frac{12}{(s+1)(s+4)}, \qquad s = j\omega$$

Using partial fraction,

$$V_o(\omega) = \frac{A}{s+1} + \frac{B}{s+2} + \frac{C}{s+1} + \frac{D}{s+4} = \frac{16}{1+j\omega} - \frac{20}{2+j\omega} + \frac{4}{4+j\omega}$$

Thus,

$$\mathbf{v_o(t) = \underline{\left(16e^{-t} - 20e^{-2t} + 4e^{-4t}\right)u(t)\,V}}$$

www.konkur.in

Chapter 18, Solution 60.

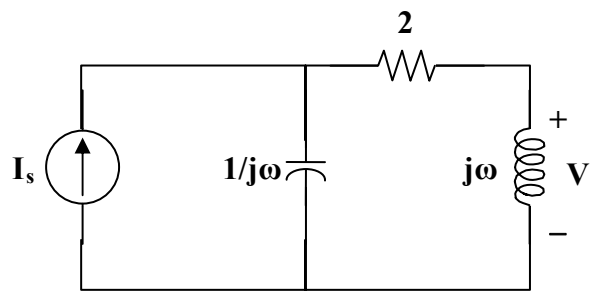

$$V = j\omega I_s \frac{\frac{1}{j\omega}}{\frac{1}{j\omega} + 2 + j\omega} = \frac{j\omega I_s}{1 - \omega^2 + j2\omega}$$

Since the voltage appears across the inductor, there is no DC component.

$$V_1 = \frac{2\pi\angle 90° 8}{1 - 4\pi^2 + j4\pi} = \frac{50.27\angle 90°}{-38.48 + j12.566} = 1.2418\angle -71.92°$$

$$V_2 = \frac{4\pi\angle 90° 5}{1 - 16\pi^2 + j8\pi} = \frac{62.83\angle 90°}{-156.91 + j25.13} = 0.3954\angle -80.9°$$

$$\mathbf{v(t) = \underline{1.2418\cos(2\pi t - 41.92°) + 0.3954\cos(4\pi t + 129.1°)\,mV}}$$

www.konkur.in

Chapter 18, Solution 61.

$$y(t) = (2 + \cos \omega_o t)x(t)$$

We apply the Fourier Transform

$$Y(\omega) = \mathbf{2}\boldsymbol{X}(\boldsymbol{\omega}) + \mathbf{0.5}\boldsymbol{X}(\boldsymbol{\omega}+\boldsymbol{\omega}_{\mathbf{o}}) + \mathbf{0.5}\boldsymbol{X}(\boldsymbol{\omega}-\boldsymbol{\omega}_{\mathbf{o}}).$$

www.konkur.in

Chapter 18, Solution 62.

For the lower sideband, the frequencies range from

10,000,000 – 3,500 Hz = **9,996,500 Hz** to
10,000,000 – 400 Hz = **9,999,600 Hz**

For the upper sideband, the frequencies range from

10,000,000 + 400 Hz = **10,000,400 Hz** to
10,000,000 + 3,500 Hz = **10,003,500 Hz**

www.konkur.in

Chapter 18, Solution 63.

Since f_n = 5 kHz, $2f_n$ = 10 kHz

i.e. the stations must be spaced 10 kHz apart to avoid interference.

$$\Delta f = 1600 - 540 = 1060 \text{ kHz}$$

The number of stations = Δf /10 kHz = **106 stations**

www.konkur.in

Chapter 18, Solution 64.

Δf = 108 – 88 MHz = 20 MHz

The number of stations = 20 MHz/0.2 MHz = **100 stations**

www.konkur.in

Chapter 18, Solution 65.

$\omega = 3.4$ kHz

$$f_s = 2\omega = \mathbf{6.8\ kHz}$$

www.konkur.in

Chapter 18, Solution 66.

$\omega = 4.5$ MHz

$f_c = 2\omega = 9$ MHz

$T_s = 1/f_c = 1/(9\text{x}10^6) = 1.11\text{x}10^{-7} =$ **111 ns**

www.konkur.in

Chapter 18, Solution 67.

We first find the Fourier transform of g(t). We use the results of Example 17.2 in conjunction with the duality property. Let Arect(t) be a rectangular pulse of height A and width T as shown below.

Arect(t) transforms to $At\text{sinc}(\omega^2/2)$

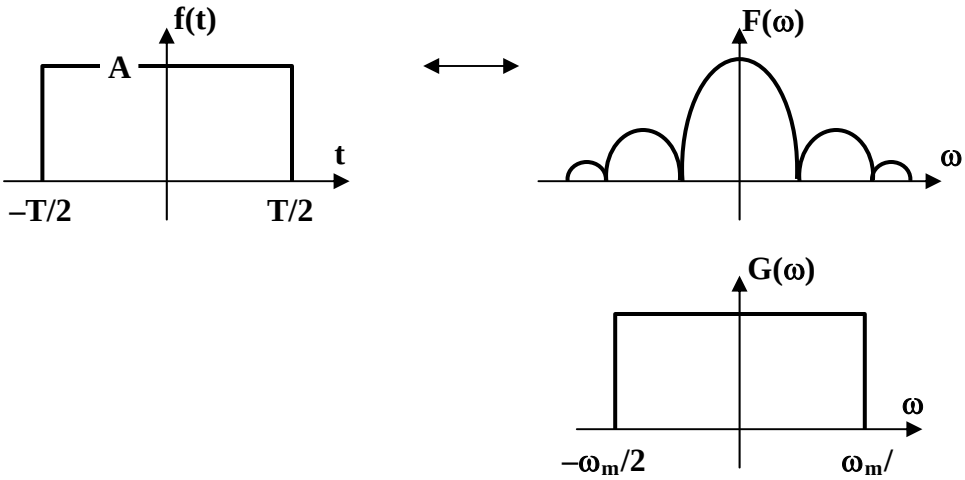

According to the duality property,

$$A\tau\text{sinc}(\tau t/2) \quad \text{becomes} \quad 2\pi A\text{rect}(\tau)$$

$$g(t) = \text{sinc}(200\pi t) \quad \text{becomes} \quad 2\pi A\text{rect}(\tau)$$

where $A\tau = 1$ and $\tau/2 = 200\pi$ or $T = 400\pi$

i.e. the upper frequency $\omega_u = 400\pi = 2\pi f_u$ or $f_u = 200$ Hz

The Nyquist rate $= f_s =$ **200 Hz**

The Nyquist interval $= 1/f_s = 1/200 =$ **5 ms**

www.konkur.in

Chapter 18, Solution 68.

The total energy is

$$W_T = \int_{-\infty}^{\infty} v^2(t)\,dt$$

Since v(t) is an even function,

$$W_T = \int_0^{\infty} 2500e^{-4t}dt = 5000\left.\frac{e^{-4t}}{-4}\right|_0^{\infty} = 1250 \text{ J}$$

$$V(\omega) = 50x4/(4 + \omega^2)$$

$$W = \frac{1}{2\pi}\int_1^5 |V(\omega)|^2\, d\omega = \frac{1}{2\pi}\int_1^5 \frac{(200)^2}{(4+\omega^2)^2}d\omega$$

But $$\int \frac{1}{(a^2+x^2)^2}dx = \frac{1}{2a^2}\left[\frac{x}{x^2+a^2} + \frac{1}{a}\tan^{-1}(x/a)\right] + C$$

$$W = \frac{2x10^4}{\pi}\frac{1}{8}\left[\frac{\omega}{4+\omega^2} + \frac{1}{2}\tan^{-1}(\omega/2)\right]\Bigg|_1^5$$

$$= (2500/\pi)[(5/29) + 0.5\tan^{-1}(5/2) - (1/5) - 0.5\tan^{-1}(1/2) = 267.19$$

$$W/W_T = 267.19/1250 = 0.2137 \text{ or } \mathbf{21.37\%}$$

www.konkur.in

Chapter 18, Solution 69.

The total energy is

$$W_T = \frac{1}{2\pi}\int_{-\infty}^{\infty}|F(\omega)|^2\,d\omega = \frac{1}{2\pi}\int_{-\infty}^{\infty}\frac{400}{4^2+\omega^2}\,d\omega$$

$$= \frac{400}{\pi}\Big[(1/4)\tan^{-1}(\omega/4)\Big]_0^{\infty} = \frac{100}{\pi}\frac{\pi}{2} = 50$$

$$W = \frac{1}{2\pi}\int_0^{2}|F(\omega)|^2\,d\omega = \frac{400}{2\pi}\Big[(1/4)\tan^{-1}(\omega/4)\Big]_0^{2}$$

$$= [100/(2\pi)]\tan^{-1}(2) = (50/\pi)(1.107) = 17.6187$$

$W/W_T = 17.6187/50 = 0.3524$ or **35.24%**

Chapter 19, Solution 1.

To get $\mathbf{z}_{11}$ and $\mathbf{z}_{21}$, consider the circuit in Fig. (a).

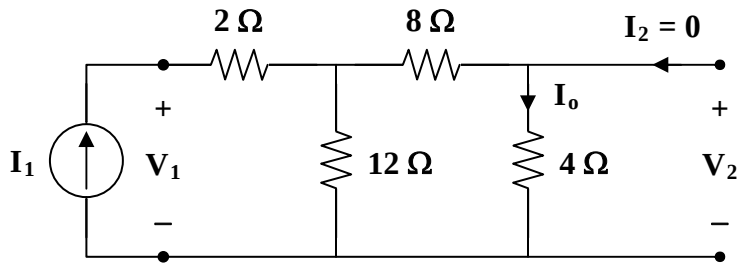

(a)

$$\mathbf{z}_{11} = \frac{\mathbf{V}_1}{\mathbf{I}_1} = 2 + 12 \,||\, (8+4) = 8\,\Omega$$

$$\mathbf{I}_o = \frac{1}{2}\mathbf{I}_1, \qquad \mathbf{V}_2 = 4\mathbf{I}_o = \mathbf{I}_1$$

$$\mathbf{z}_{21} = \frac{\mathbf{V}_2}{\mathbf{I}_1} = 2\,\Omega$$

To get $\mathbf{z}_{22}$ and $\mathbf{z}_{12}$, consider the circuit in Fig. (b).

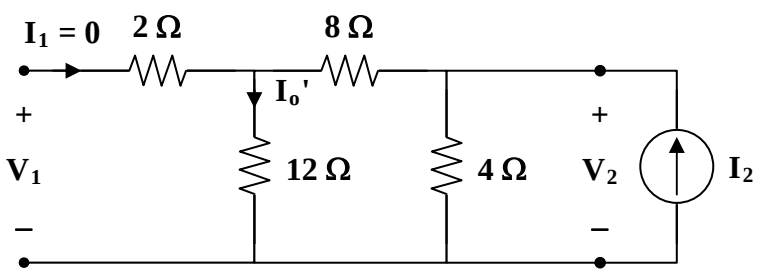

(b)

$$\mathbf{z}_{22} = \frac{\mathbf{V}_2}{\mathbf{I}_2} = 4 \,||\, (8+12) = 3.333\,\Omega$$

$$\mathbf{I}_o' = \frac{4}{4+20}\mathbf{I}_2 = \frac{1}{6}\mathbf{I}_2, \qquad \mathbf{V}_1 = 12\mathbf{I}_o' = 2\mathbf{I}_2$$

$$\mathbf{z}_{12} = \frac{\mathbf{V}_1}{\mathbf{I}_2} = 2\,\Omega$$

Hence,

$$[\mathbf{z}] = \begin{bmatrix} \mathbf{8} & \mathbf{2} \\ \mathbf{2} & \mathbf{3.333} \end{bmatrix} \boldsymbol{\Omega}$$

www.konkur.in

Chapter 19, Solution 2.

Consider the circuit in Fig. (a) to get $\mathbf{z}_{11}$ and $\mathbf{z}_{21}$.

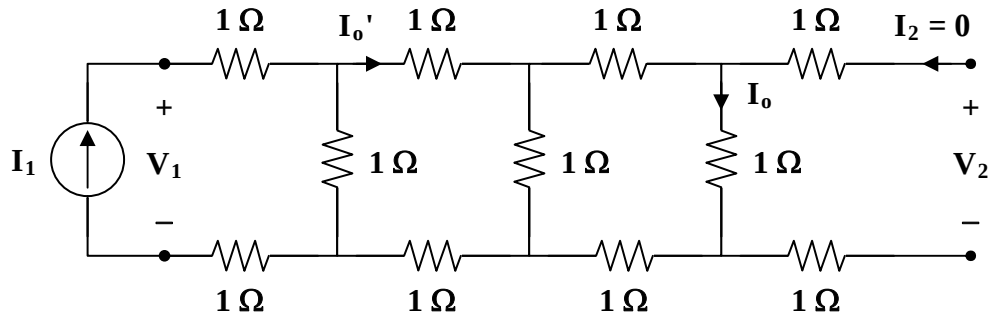

(a)

$$\mathbf{z}_{11} = \frac{\mathbf{V}_1}{\mathbf{I}_1} = 2 + 1 \| [2 + 1 \| (2+1)]$$

$$\mathbf{z}_{11} = 2 + 1 \| \left(2 + \frac{3}{4}\right) = 2 + \frac{(1)(11/4)}{1 + 11/4} = 2 + \frac{11}{15} = 2.733$$

$$\mathbf{I}_o = \frac{1}{1+3}\mathbf{I}_o' = \frac{1}{4}\mathbf{I}_o'$$

$$\mathbf{I}_o' = \frac{1}{1+11/4}\mathbf{I}_1 = \frac{4}{15}\mathbf{I}_1$$

$$\mathbf{I}_o = \frac{1}{4} \cdot \frac{4}{15}\mathbf{I}_1 = \frac{1}{15}\mathbf{I}_1$$

$$\mathbf{V}_2 = \mathbf{I}_o = \frac{1}{15}\mathbf{I}_1$$

$$\mathbf{z}_{21} = \frac{\mathbf{V}_2}{\mathbf{I}_1} = \frac{1}{15} = \mathbf{z}_{12} = 0.06667$$

To get $\mathbf{z}_{22}$, consider the circuit in Fig. (b).

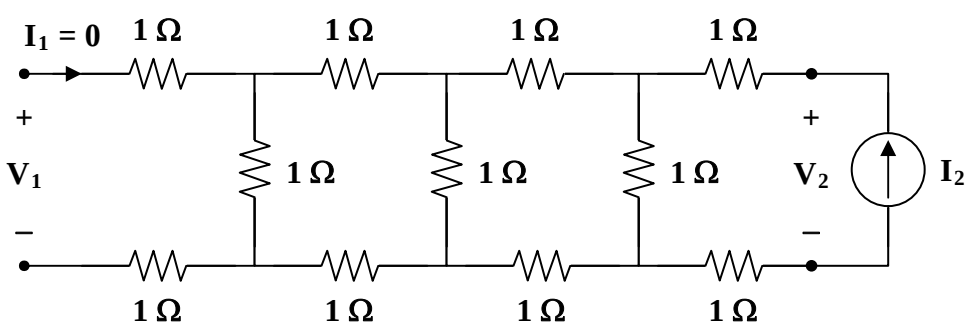

(b)

www.konkur.in

$$\mathbf{z}_{22} = \frac{\mathbf{V}_2}{\mathbf{I}_2} = 2 + 1 \parallel (2 + 1 \parallel 3) = \mathbf{z}_{11} = 2.733$$

Thus,

$$[\mathbf{z}] = \begin{bmatrix} \mathbf{2.733} & \mathbf{0.06667} \\ \mathbf{0.06667} & \mathbf{2.733} \end{bmatrix} \mathbf{\Omega}$$

www.konkur.in

Chapter 19, Solution 3.

We can use Figure 19.5 to determine the z-parameters.

$\mathbf{z_{12} = j12 = z_{21}}$

$\mathbf{z_{11} - z_{12}} = 8$ or $\mathbf{z_{11} = (8+j12)\ \Omega}$

$\mathbf{z_{22} - z_{12}} = -j20$ or $\mathbf{z_{22} = (-j8)\ \Omega}$

www.konkur.in

Chapter 19, Solution 4.

Using Fig. 19.68, design a problem to help other students to better understand how to determine z parameters from an electrical circuit.

Although there are many ways to solve this problem, this is an example based on the same kind of problem asked in the third edition.

Problem

Calculate the *z* parameters for the circuit in Fig.19.68.

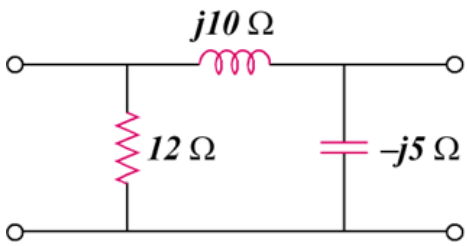

Figure 19.68

Solution

Transform the Π network to a T network.

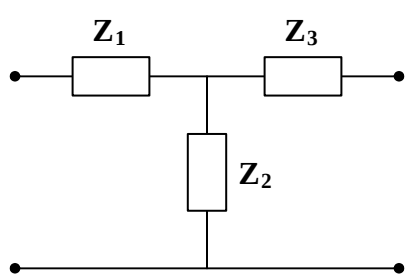

$$\mathbf{Z}_1 = \frac{(12)(j10)}{12 + j10 - j5} = \frac{j120}{12 + j5}$$

$$\mathbf{Z}_2 = \frac{-j60}{12 + j5}$$

$$\mathbf{Z}_3 = \frac{50}{12 + j5}$$

The z parameters are

$$\mathbf{z}_{12} = \mathbf{z}_{21} = \mathbf{Z}_2 = \frac{(-j60)(12 - j5)}{144 + 25} = -1.775 - j4.26$$

www.konkur.in

$$\mathbf{z}_{11} = \mathbf{Z}_1 + \mathbf{z}_{12} = \frac{(j120)(12 - j5)}{169} + \mathbf{z}_{12} = 1.775 + j4.26$$

$$\mathbf{z}_{22} = \mathbf{Z}_3 + \mathbf{z}_{21} = \frac{(50)(12 - j5)}{169} + \mathbf{z}_{21} = 1.7758 - j5.739$$

Thus,

$$[\mathbf{z}] = \begin{bmatrix} \mathbf{1.775 + j4.26} & \mathbf{-1.775 - j4.26} \\ \mathbf{-1.775 - j4.26} & \mathbf{1.775 - j5.739} \end{bmatrix} \mathbf{\Omega}$$

www.konkur.in

Chapter 19, Solution 5.

Consider the circuit in Fig. (a).

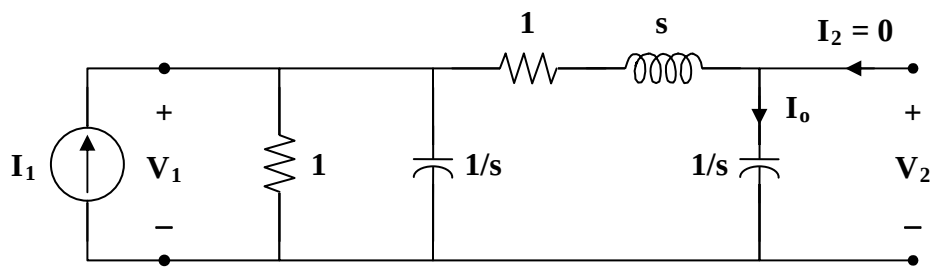

(a)

$$\mathbf{z}_{11} = 1 \,\|\, \frac{1}{s} \,\|\left(1+s+\frac{1}{s}\right) = \frac{\frac{1}{s}}{1+\frac{1}{s}} \,\|\left(1+s+\frac{1}{s}\right) = \frac{\left(\frac{1}{s+1}\right)\left(1+s+\frac{1}{s}\right)}{\left(\frac{1}{s+1}\right)+1+s+\frac{1}{s}}$$

$$\mathbf{z}_{11} = \frac{s^2+s+1}{s^3+2s^2+3s+1}$$

$$\mathbf{I}_o = \frac{1 \,\|\, \frac{1}{s}}{1 \,\|\, \frac{1}{s}+1+s+\frac{1}{s}}\,\mathbf{I}_1 = \frac{\frac{1}{s+1}}{\frac{1}{s+1}+1+s+\frac{1}{s}}\,\mathbf{I}_1 = \frac{\frac{s}{s+1}}{\frac{s}{s+1}+s^2+s+1}\,\mathbf{I}_1$$

$$\mathbf{I}_o = \frac{s}{s^3+2s^2+3s+1}\,\mathbf{I}_1$$

$$\mathbf{V}_2 = \frac{1}{s}\mathbf{I}_o = \frac{\mathbf{I}_1}{s^3+2s^2+3s+1}$$

$$\mathbf{z}_{21} = \frac{\mathbf{V}_2}{\mathbf{I}_1} = \frac{1}{s^3+2s^2+3s+1}$$

Consider the circuit in Fig. (b).

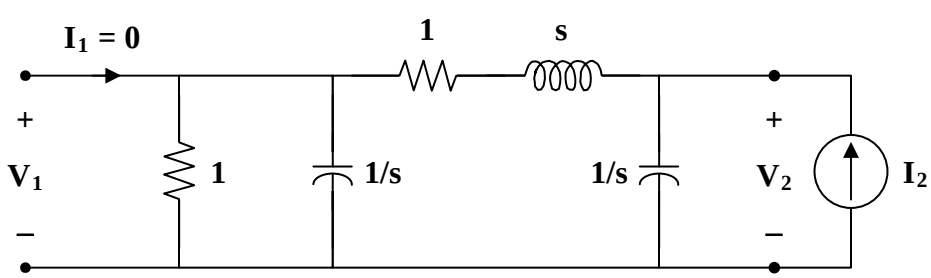

(b)

www.konkur.in

$$\mathbf{z}_{22} = \frac{\mathbf{V}_2}{\mathbf{I}_2} = \frac{1}{s} \| \left(1 + s + 1 \| \frac{1}{s}\right) = \frac{1}{s} \| \left(1 + s + \frac{1}{s+1}\right)$$

$$\mathbf{z}_{22} = \frac{\left(\frac{1}{s}\right)\left(1 + s + \frac{1}{s+1}\right)}{\frac{1}{s} + 1 + s + \frac{1}{s+1}} = \frac{1 + s + \frac{1}{s+1}}{1 + s + s^2 + \frac{s}{s+1}}$$

$$\mathbf{z}_{22} = \frac{s^2 + 2s + 2}{s^3 + 2s^2 + 3s + 1}$$

$$\mathbf{z}_{12} = \mathbf{z}_{21}$$

Hence,

$$[\mathbf{z}] = \begin{bmatrix} \dfrac{\mathbf{s^2 + s + 1}}{\mathbf{s^3 + 2s^2 + 3s + 1}} & \dfrac{\mathbf{1}}{\mathbf{s^3 + 2s^2 + 3s + 1}} \\ \dfrac{\mathbf{1}}{\mathbf{s^3 + 2s^2 + 3s + 1}} & \dfrac{\mathbf{s^2 + 2s + 2}}{\mathbf{s^3 + 2s^2 + 3s + 1}} \end{bmatrix}$$

www.konkur.in

Chapter 19, Solution 6.

To find z_{11} and z_{21} , consider the circuit below.

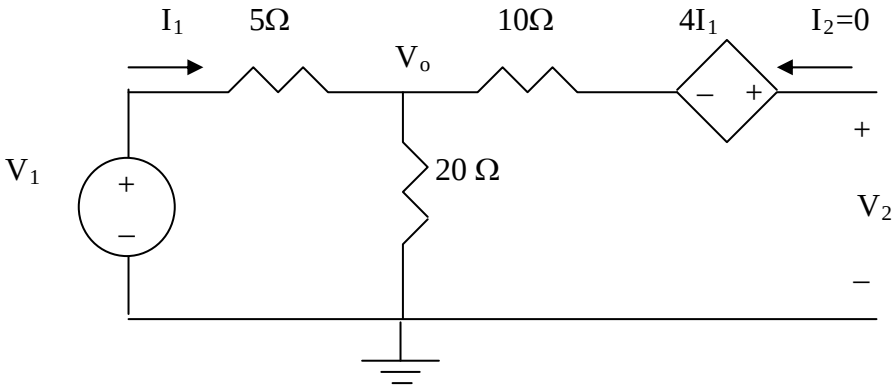

$$z_{11} = \frac{V_1}{I_1} = \frac{(20+5)I_1}{I_1} = 25\ \Omega$$

$$V_o = \frac{20}{25}V_1 = 20I_1$$

$$-V_o - 4I_2 + V_2 = 0 \quad \longrightarrow \quad V_2 = V_o + 4I_1 = 20I_1 + 4I_1 = 24I_1$$

$$z_{21} = \frac{V_2}{I_1} = 24\ \Omega$$

To find z_{12} and z_{22}, consider the circuit below.

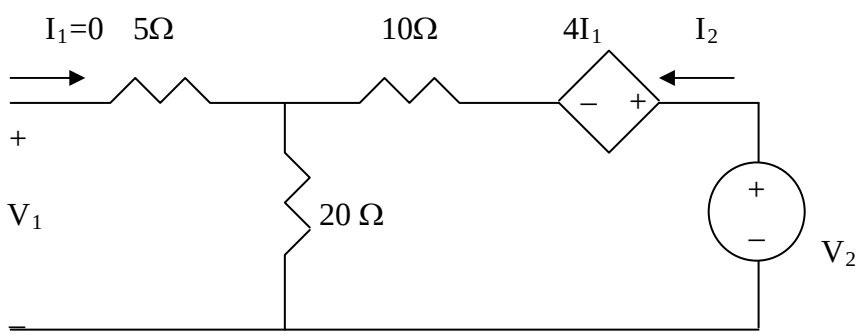

$$V_2 = (10+20)I_2 = 30I_2$$

$$z_{22} = \frac{V_2}{I_1} = 30\ \Omega$$

$$V_1 = 20I_2$$

www.konkur.in

$$z_{12} = \frac{V_1}{I_2} = 20\ \Omega$$

Thus,

$$[z] = \underline{\begin{bmatrix} 25 & 20 \\ 24 & 30 \end{bmatrix} \Omega}$$

www.konkur.in

Chapter 19, Solution 7.

To get z_{11} and z_{21}, we consider the circuit below.

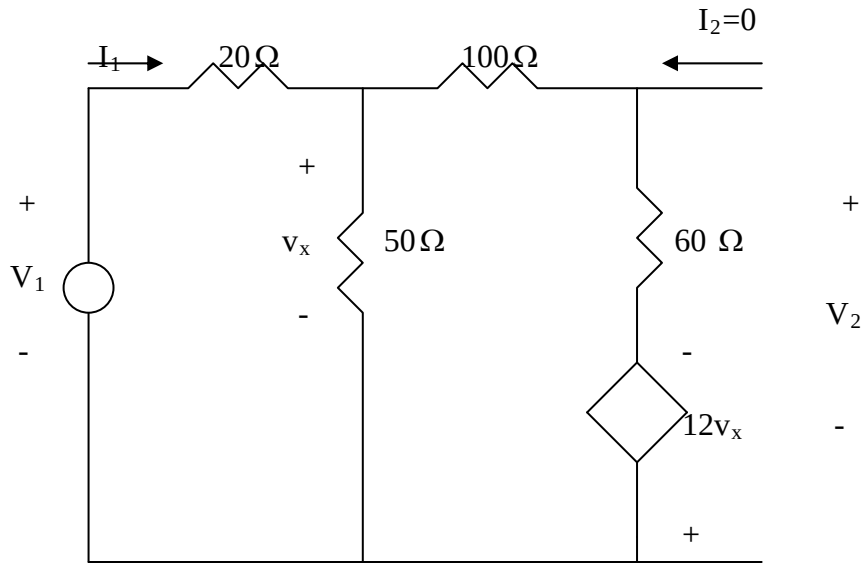

$$\frac{V_1 - V_x}{20} = \frac{V_x}{50} + \frac{V_x + 12V_x}{160} \longrightarrow V_x = \frac{40}{121}V_1$$

$$I_1 = \frac{V_1 - V_x}{20} = \frac{81}{121}(\frac{V_1}{20}) \longrightarrow z_{11} = \frac{V_1}{I_1} = 29.88$$

$$V_2 = 60(\frac{13V_x}{160}) - 12V_x = -\frac{57}{8}V_x = -\frac{57}{8}(\frac{40}{121})V_1 = -\frac{57}{8}(\frac{40}{121})\frac{20x121}{81}I_1$$

$$= -70.37I_1 \longrightarrow z_{21} = \frac{V_2}{I_1} = -70.37$$

To get z_{12} and z_{22}, we consider the circuit below.

www.konkur.in

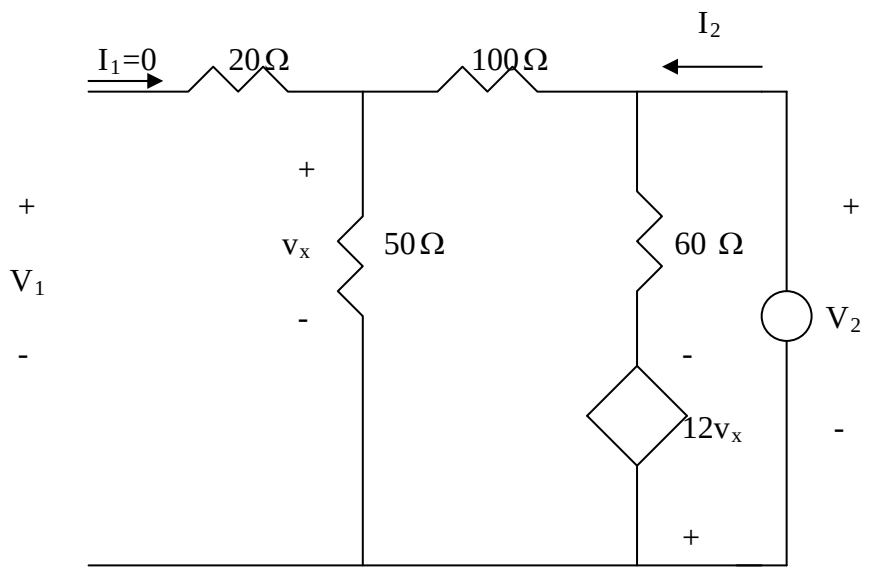

$$V_x = \frac{50}{100+50}V_2 = \frac{1}{3}V_2, \qquad I_2 = \frac{V_2}{150} + \frac{V_2 + 12V_x}{60} = 0.09V_2$$

$$z_{22} = \frac{V_2}{I_2} = 1/0.09 = 11.11$$

$$V_1 = V_x = \frac{1}{3}V_2 = \frac{11.11}{3}I_2 = 3.704I_2 \quad \longrightarrow \quad z_{12} = \frac{V_1}{I_2} = 3.704$$

Thus,

$$\mathbf{[z] = \begin{bmatrix} 29.88 & 3.704 \\ -70.37 & 11.11 \end{bmatrix}\Omega}$$

www.konkur.in

Chapter 19, Solution 8.

To get z_{11} and z_{21}, consider the circuit below.

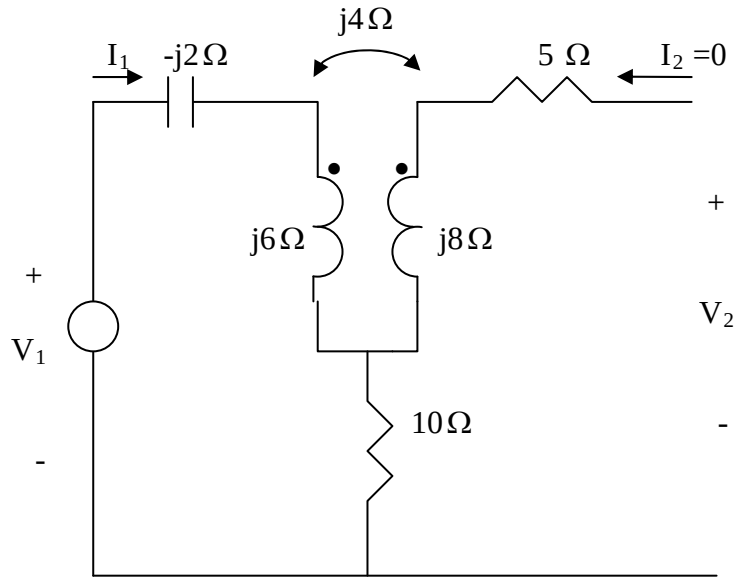

$$V_1 = (10 - j2 + j6)I_1 \quad \longrightarrow \quad z_{11} = \frac{V_1}{I_1} = 10 + j4$$

$$V_2 = -10I_1 - j4I_1 \quad \longrightarrow \quad z_{21} = \frac{V_2}{I_1} = -(10 + j4)$$

To get z_{22} and z_{12}, consider the circuit below.

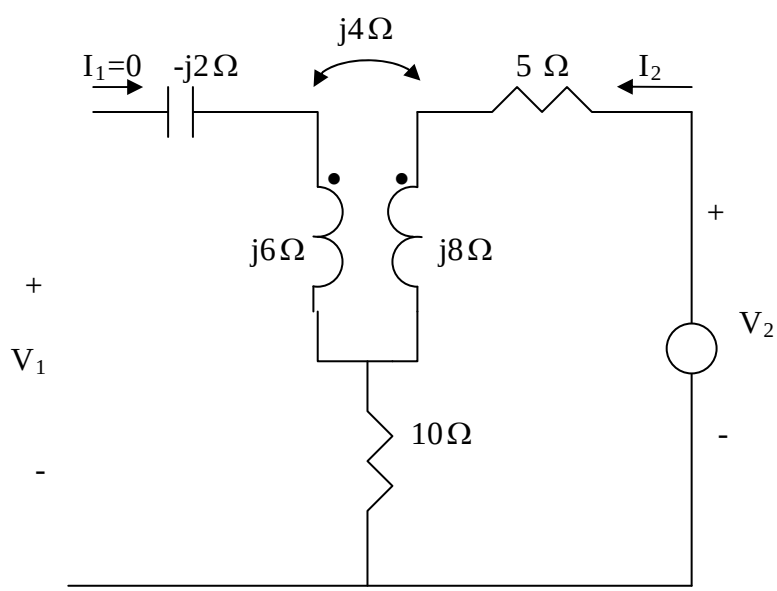

www.konkur.in

$$V_2 = (5 + 10 + j8)I_2 \longrightarrow z_{22} = \frac{V_2}{I_2} = 15 + j8$$

$$V_1 = -(10 + j4)I_2 \longrightarrow z_{12} = \frac{V_1}{I_2} = -(10 + j4)$$

Thus,

$$\mathbf{[z] = \begin{bmatrix} (10 + j4) & -(10 + j4) \\ -(10 + j4) & (15 + j8) \end{bmatrix} \Omega}$$

www.konkur.in

Chapter 19, Solution 9.

$$\Delta_y = y_{11}y_{22} - y_{12}y_{21} = 0.5x0.4 - 0.2x0.2 = 0.16$$

$$z_{11} = \frac{y_{22}}{\Delta_y} = \frac{0.4}{0.16} = \mathbf{2.5\ \Omega}$$

$$z_{12} = \frac{-y_{12}}{\Delta_y} = \frac{0.2}{0.16} = \mathbf{1.25\ \Omega} = z_{21}$$

$$z_{22} = \frac{y_{11}}{\Delta_y} = \frac{0.5}{0.16} = \mathbf{3.125\ \Omega}$$

Thus,

$$\mathbf{Z} = [\mathbf{z}] = \begin{bmatrix} \mathbf{2.5} & \mathbf{1.25} \\ \mathbf{1.25} & \mathbf{3.125} \end{bmatrix} \mathbf{\Omega}$$

www.konkur.in

Chapter 19, Solution 10.

(a) This is a non-reciprocal circuit so that **the two-port looks like the one shown in Figs. (a) and (b)**.

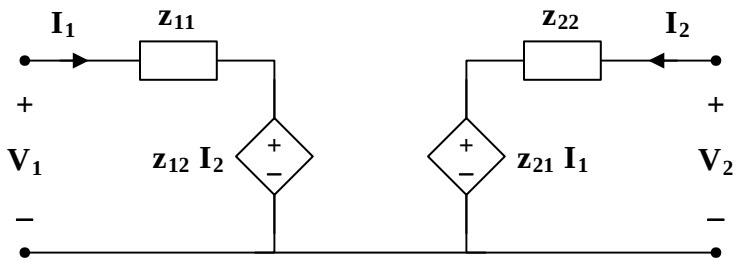

(a)

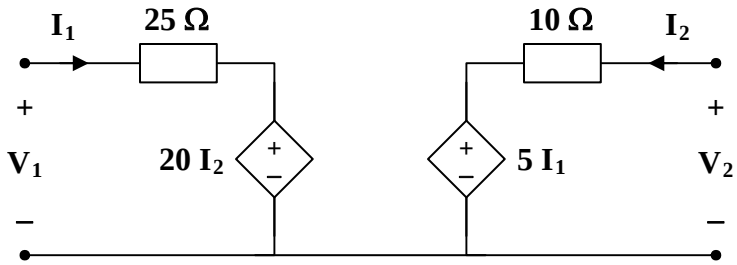

(b)

(b) This is a reciprocal network and **the two-port look like the one shown in Figs. (c) and (d)**.

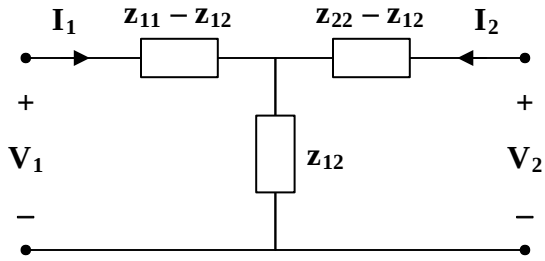

(c)

$$z_{11} - z_{12} = 1 + \frac{2}{s} = 1 + \frac{1}{0.5s}$$

$$z_{22} - z_{12} = 2s$$

$$z_{12} = \frac{1}{s}$$

www.konkur.in

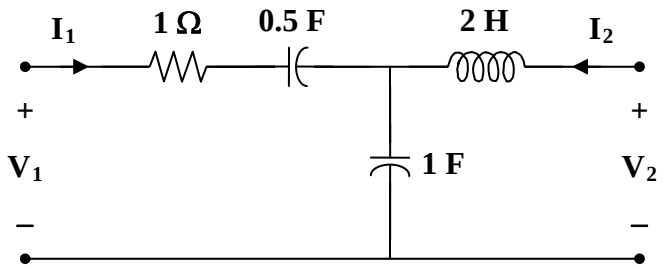

(d)

www.konkur.in

Chapter 19, Solution 11.

This is a reciprocal network, as shown below.

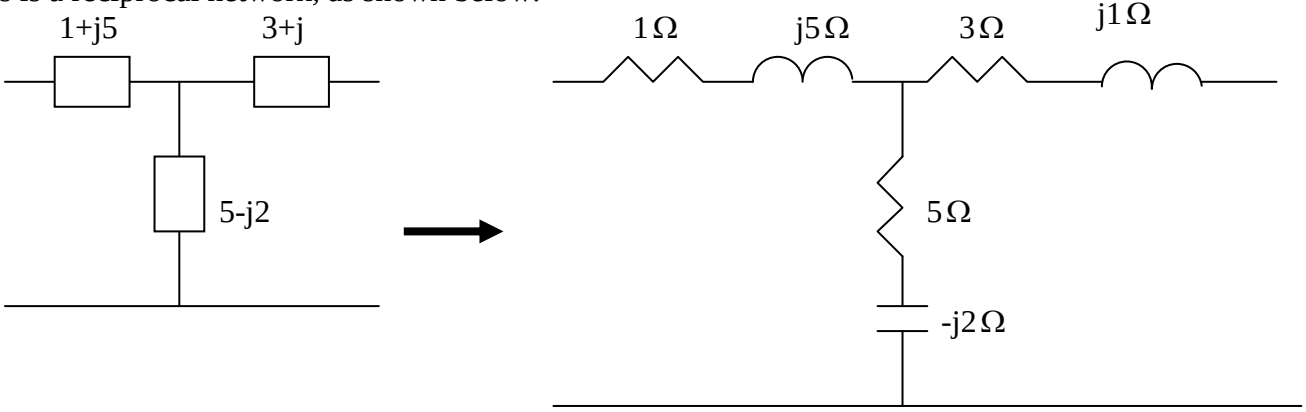

www.konkur.in

Chapter 19, Solution 12.

$$V_1 = 10I_1 - 6I_2 \qquad (1)$$
$$V_2 = -4I_2 + 12I_2 \qquad (2)$$
$$V_2 = -10I_2 \qquad (3)$$

If we convert the current source to a voltage source, that portion of the circuit becomes what is shown below.

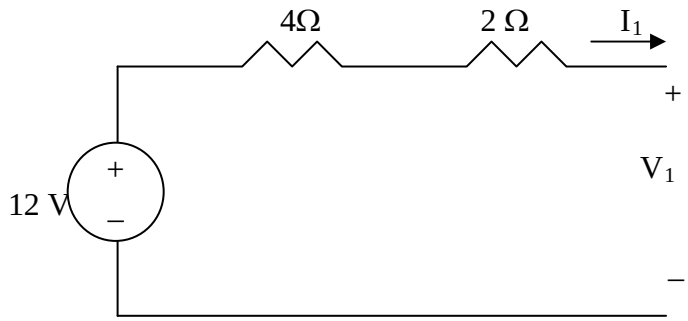

$$-12 + 6I_1 + V_1 = 0 \quad \longrightarrow \quad V_1 = 12 - 6I_1 \qquad (4)$$

Substituting (3) and (4) into (1) and (2), we get

$$12 - 6I_1 = 10I_1 - 6I_2 \quad \longrightarrow \quad 12 = 16I_1 - 6I_2 \qquad (5)$$
$$-10I_2 = -4I_1 + 12I_2 \quad \longrightarrow \quad 0 = -4I_1 + 22I_2 \quad \longrightarrow \quad I_1 = 5.5I_2 \qquad (6)$$

From (5) and (6),

$$12 = 88I_2 - 6I_2 = 82I_2 \quad \longrightarrow \quad I_2 = \underline{0.1463 \text{ A}}$$
$$I_1 = 5.5I_2 = \underline{0.8049 \text{ A}}$$
$$V_2 = -10I_2 = \underline{-1.463 \text{ V}}$$
$$V_1 = 12 - 6I_1 = \underline{7.1706 \text{ V}}$$

www.konkur.in

Chapter 19, Solution 13.

Consider the circuit as shown below.

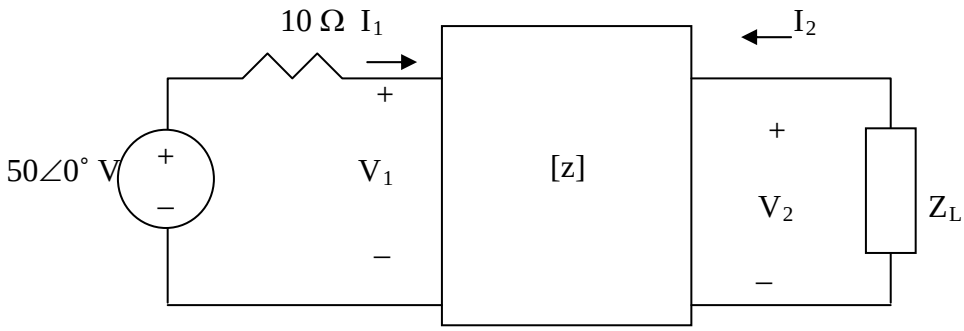

$V_1 = 40I_1 + 60I_2$ (1)

$V_2 = 80I_1 + 100I_2$ (2)

$V_2 = -I_2 Z_L = -I_2(5 + j4)$ (3)

$50 = V_1 + 10I_1 \longrightarrow V_1 = 50 - 10I_1$ (4)

Substituting (4) in (1)

$50 - 10I_1 = 40I_1 + 60I_2 \longrightarrow 5 = 5I_1 + 6I_2$ (5)

Substituting (3) into (2),

$-I_2(5 + j4) = 80I_1 + 100I_2 \longrightarrow 0 = 80I_1 + (105 + j4)I_2$ (6)

Solving (5) and (6) gives

$I_2 = -7.423 + j3.299$ A

We can check the answer using MATLAB.

First we need to rewrite equations 1-4 as follows,

$$\begin{bmatrix} 1 & 0 & -40 & -60 \\ 0 & 1 & -80 & -100 \\ 0 & 1 & 0 & 5+j4 \\ 1 & 0 & 10 & 0 \end{bmatrix} \begin{bmatrix} V_1 \\ V_2 \\ I_1 \\ I_2 \end{bmatrix} = A * X = \begin{bmatrix} 0 \\ 0 \\ 0 \\ 50 \end{bmatrix} = U$$

```
>> A=[1,0,-40,-60;0,1,-80,-100;0,1,0,(5+4i);1,0,10,0]
A =
  1.0e+002 *
   0.0100         0        -0.4000        -0.6000
        0    0.0100        -0.8000        -1.0000
        0    0.0100              0   0.0500 + 0.0400i
   0.0100         0         0.1000              0
>> U=[0;0;0;50]
U =
```

www.konkur.in

```
     0
     0
     0
    50
>> X=inv(A)*U
X =
 -49.0722 +39.5876i
  50.3093 +13.1959i
   9.9072 - 3.9588i
  -7.4227 + 3.2990i
```

$$P = |I_2|^2 5 = \mathbf{329.9\ W}.$$

www.konkur.in

Chapter 19, Solution 14.

To find $\mathbf{Z}_{Th}$, consider the circuit in Fig. (a).

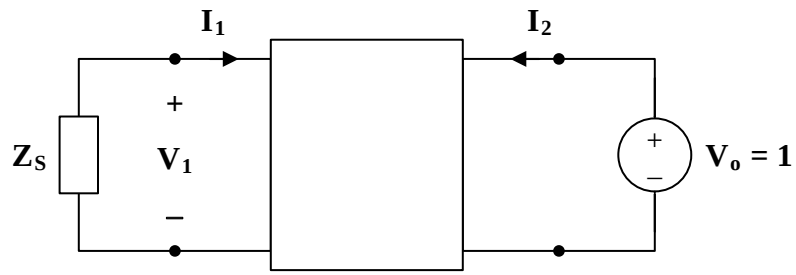

(a)

$$\mathbf{V}_1 = \mathbf{z}_{11}\mathbf{I}_1 + \mathbf{z}_{12}\mathbf{I}_2 \qquad (1)$$
$$\mathbf{V}_2 = \mathbf{z}_{21}\mathbf{I}_1 + \mathbf{z}_{22}\mathbf{I}_2 \qquad (2)$$

But

$$\mathbf{V}_2 = 1, \qquad \mathbf{V}_1 = -\mathbf{Z}_s\mathbf{I}_1$$

Hence,

$$0 = (\mathbf{z}_{11} + \mathbf{Z}_s)\mathbf{I}_1 + \mathbf{z}_{12}\mathbf{I}_2 \longrightarrow \mathbf{I}_1 = \frac{-\mathbf{z}_{12}}{\mathbf{z}_{11} + \mathbf{Z}_s}\mathbf{I}_2$$

$$1 = \left(\frac{-\mathbf{z}_{21}\mathbf{z}_{12}}{\mathbf{z}_{11} + \mathbf{Z}_s} + \mathbf{z}_{22}\right)\mathbf{I}_2$$

$$\mathbf{Z}_{Th} = \frac{\mathbf{V}_2}{\mathbf{I}_2} = \frac{1}{\mathbf{I}_2} = \underline{\mathbf{z}_{22} - \frac{\mathbf{z}_{21}\mathbf{z}_{12}}{\mathbf{z}_{11} + \mathbf{Z}_s}}$$

To find $\mathbf{V}_{Th}$, consider the circuit in Fig. (b).

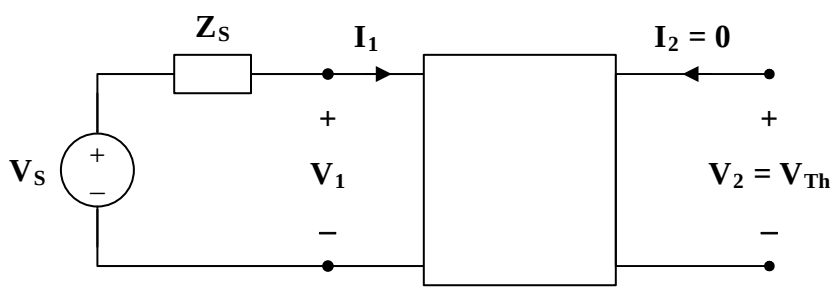

(b)

$$\mathbf{I}_2 = 0, \qquad \mathbf{V}_1 = \mathbf{V}_s - \mathbf{I}_1\mathbf{Z}_s$$

Substituting these into (1) and (2),

www.konkur.in

$$\mathbf{V}_s - \mathbf{I}_1 \mathbf{Z}_s = \mathbf{z}_{11} \mathbf{I}_1 \longrightarrow \mathbf{I}_1 = \frac{\mathbf{V}_s}{\mathbf{z}_{11} + \mathbf{Z}_s}$$

$$\mathbf{V}_2 = \mathbf{z}_{21} \mathbf{I}_1 = \frac{\mathbf{z}_{21} \mathbf{V}_s}{\mathbf{z}_{11} + \mathbf{Z}_s}$$

$$\mathbf{V}_{Th} = \mathbf{V}_2 = \frac{\mathbf{z}_{21} \mathbf{V}_s}{\mathbf{z}_{11} + \mathbf{Z}_s}$$

www.konkur.in

Chapter 19, Solution 15.

(a) From Prob. 18.12,

$$Z_{Th} = z_{22} - \frac{z_{12}z_{21}}{z_{11} + Z_s} = 120 - \frac{80x60}{40+10} = 24$$

$$\underline{Z_L = Z_{Th} = 24\Omega}$$

(b) $$V_{Th} = \frac{z_{21}}{z_{11} + Z_s} V_s = \frac{80}{40+10}(120) = 192$$

$$P_{max} = \left(\frac{V_{Th}}{2R_{Th}}\right)^2 R_{Th} = 4^2 x24 = \mathbf{384W}$$

www.konkur.in

Chapter 19, Solution 16.

As a reciprocal two-port, the given circuit can be represented as shown in Fig. (a).

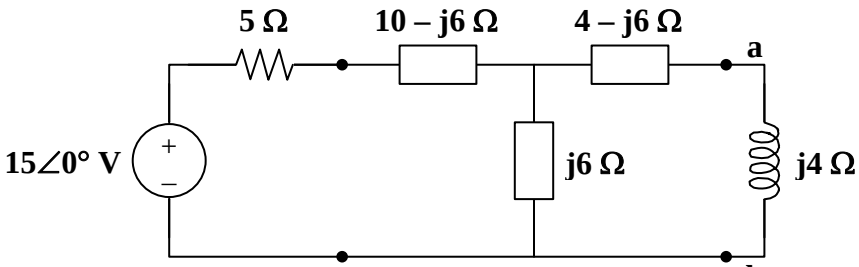

(a)

At terminals a-b,

$$\mathbf{Z}_{Th} = (4 - j6) + j6 \,||\, (5 + 10 - j6)$$

$$\mathbf{Z}_{Th} = 4 - j6 + \frac{j6(15 - j6)}{15} = 4 - j6 + 2.4 + j6$$

$$\mathbf{Z}_{Th} = \mathbf{6.4\,\Omega}$$

$$\mathbf{V}_{Th} = \frac{j6}{j6 + 5 + 10 - j6}(15\angle 0°) = j6 = \mathbf{6\angle 90°\ V}$$

The Thevenin equivalent circuit is shown in Fig. (b).

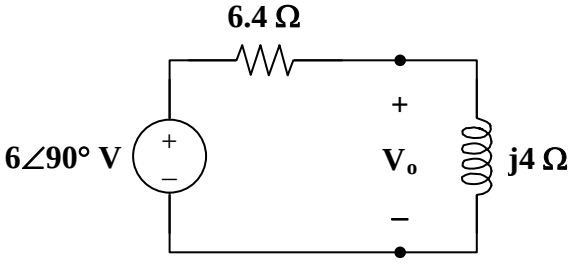

(b)

From this,

$$\mathbf{V}_o = \frac{j4}{6.4 + j4}(j6) = 3.18\angle 148°$$

$$v_o(t) = \mathbf{3.18\cos(2t + 148°)\ V}$$

www.konkur.in

Chapter 19, Solution 17.

To obtain $\mathbf{z}_{11}$ and $\mathbf{z}_{21}$, consider the circuit in Fig. (a).

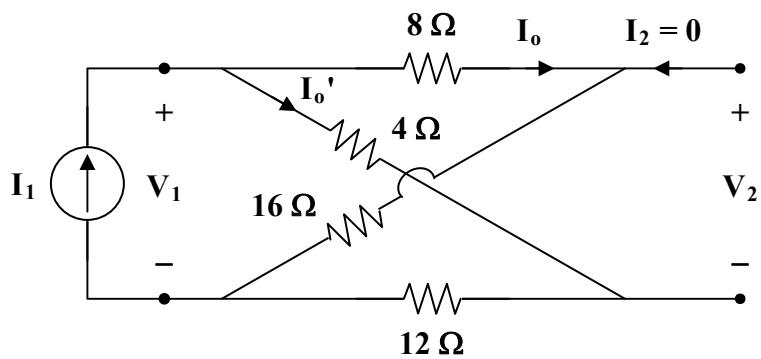

(a)

In this case, the 8-Ω and 16-Ω resistors are in series, since the same current, $\mathbf{I}_o$, passes through them. Similarly, the 4-Ω and 12-Ω resistors are in series, since the same current, $\mathbf{I}_o'$, passes through them.

$$\mathbf{z}_{11} = \frac{\mathbf{V}_1}{\mathbf{I}_1} = (8+16)\,||\,(4+12) = 24\,||\,16 = \frac{(24)(16)}{40} = \mathbf{9.6\ \Omega}$$

$$\mathbf{I}_o = \frac{16}{16+24}\mathbf{I}_1 = \frac{2}{5}\mathbf{I}_1 \qquad \mathbf{I}_o' = \frac{3}{5}\mathbf{I}_1$$

But $\quad -\mathbf{V}_2 - 8\mathbf{I}_o + 4\mathbf{I}_o' = 0$

$$\mathbf{V}_2 = -8\mathbf{I}_o + 4\mathbf{I}_o' = \frac{-16}{5}\mathbf{I}_1 + \frac{12}{5}\mathbf{I}_1 = \frac{-4}{5}\mathbf{I}_1$$

$$\mathbf{z}_{21} = \frac{\mathbf{V}_2}{\mathbf{I}_1} = \frac{-4}{5} = \mathbf{-0.8\ \Omega}$$

www.konkur.in

To get $\mathbf{z}_{22}$ and $\mathbf{z}_{12}$, consider the circuit in Fig. (b).

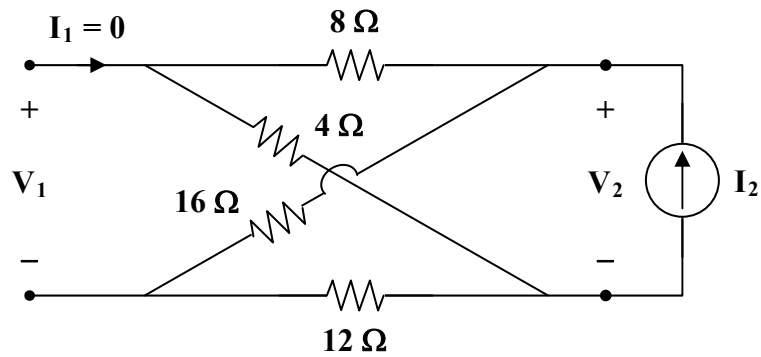

(b)

$$\mathbf{z}_{22} = \frac{\mathbf{V}_2}{\mathbf{I}_2} = (8+4) \,||\, (16+12) = 12 \,||\, 28 = \frac{(12)(28)}{40} = \mathbf{8.4\ \Omega}$$

$$\mathbf{z}_{12} = \mathbf{z}_{21} = \mathbf{-0.8\ \Omega}$$

Thus,

$$[\mathbf{z}] = \begin{bmatrix} \mathbf{9.6} & \mathbf{-0.8} \\ \mathbf{-0.8} & \mathbf{8.4} \end{bmatrix} \mathbf{\Omega}$$

We may take advantage of Table 18.1 to get [**y**] from [**z**].

$$\Delta_z = (9.6)(8.4) - (0.8)^2 = 80$$

$$\mathbf{y}_{11} = \frac{\mathbf{z}_{22}}{\Delta_z} = \frac{8.4}{80} = \mathbf{0.105\ S} \qquad \mathbf{y}_{12} = \frac{-\mathbf{z}_{12}}{\Delta_z} = \frac{0.8}{80} = \mathbf{0.01\ S}$$

$$\mathbf{y}_{21} = \frac{-\mathbf{z}_{21}}{\Delta_z} = \frac{0.8}{80} = \mathbf{0.01\ S} \qquad \mathbf{y}_{22} = \frac{\mathbf{z}_{11}}{\Delta_z} = \frac{9.6}{80} = \mathbf{0.12\ S}$$

Thus,

$$[\mathbf{y}] = \begin{bmatrix} \mathbf{0.105} & \mathbf{0.01} \\ \mathbf{0.01} & \mathbf{0.12} \end{bmatrix} \mathbf{S}$$

Chapter 19, Solution 18.

To get $\mathbf{y}_{11}$ and $\mathbf{y}_{21}$, consider the circuit in Fig.(a).

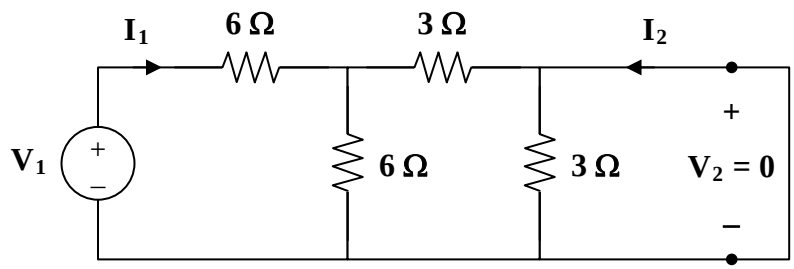

(a)

$$\mathbf{V}_1 = (6 + 6 \,||\, 3)\mathbf{I}_1 = 8\mathbf{I}_1$$

$$\mathbf{y}_{11} = \frac{\mathbf{I}_1}{\mathbf{V}_1} = \frac{1}{8}$$

$$\mathbf{I}_2 = \frac{-6}{6+3}\mathbf{I}_1 = \frac{-2}{3}\frac{\mathbf{V}_1}{8} = \frac{-\mathbf{V}_1}{12}$$

$$\mathbf{y}_{21} = \frac{\mathbf{I}_2}{\mathbf{V}_1} = \frac{-1}{12}$$

To get $\mathbf{y}_{22}$ and $\mathbf{y}_{12}$, consider the circuit in Fig.(b).

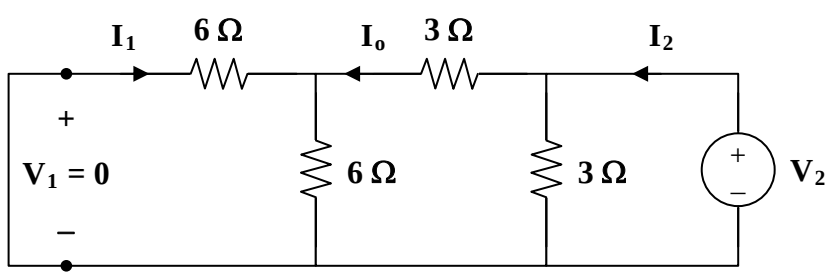

(b)

$$\mathbf{y}_{22} = \frac{\mathbf{I}_2}{\mathbf{V}_2} = \frac{1}{3 \,||\, (3 + 6 \,||\, 6)} = \frac{1}{3 \,||\, 6} = \frac{1}{2}$$

$$\mathbf{I}_1 = \frac{-\mathbf{I}_o}{2}, \qquad \mathbf{I}_o = \frac{3}{3+6}\mathbf{I}_2 = \frac{1}{3}\mathbf{I}_2$$

$$\mathbf{I}_1 = \frac{-\mathbf{I}_2}{6} = \left(\frac{-1}{6}\right)\left(\frac{1}{2}\mathbf{V}_2\right) = \frac{-\mathbf{V}_2}{12}$$

www.konkur.in

$$\mathbf{y}_{12} = \frac{\mathbf{I}_1}{\mathbf{V}_2} = \frac{-1}{12} = \mathbf{y}_{21}$$

Thus,

$$[\mathbf{y}] = \begin{bmatrix} \frac{\mathbf{1}}{\mathbf{8}} & \frac{-\mathbf{1}}{\mathbf{12}} \\ \frac{-\mathbf{1}}{\mathbf{12}} & \frac{\mathbf{1}}{\mathbf{2}} \end{bmatrix} \mathbf{S}$$

www.konkur.in

Chapter 19, Solution 19.

Using Fig. 19.80, design a problem to help other students to better understand how to find y parameters in the s-domain.

Although there are many ways to solve this problem, this is an example based on the same kind of problem asked in the third edition.

Problem

Find the *y* parameters of the two-port in Fig.19.80 in terms of *s*.

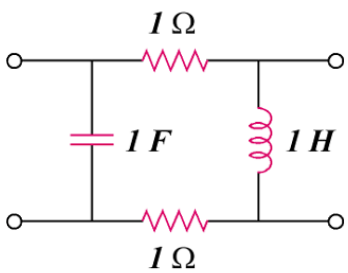

Figure 19.80

Solution

Consider the circuit in Fig.(a) for calculating $\mathbf{y}_{11}$ and $\mathbf{y}_{21}$.

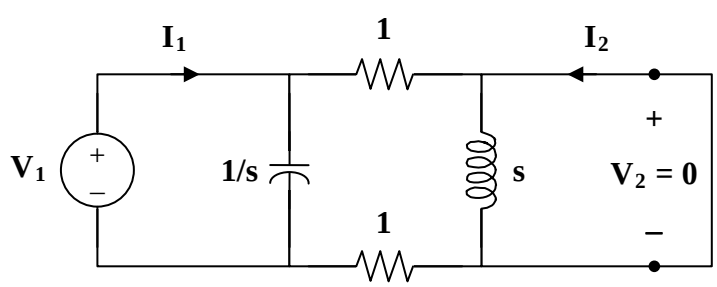

(a)

$$\mathbf{V}_1 = \left(\frac{1}{s} \parallel 2\right)\mathbf{I}_1 = \frac{2/s}{2+(1/s)}\mathbf{I}_1 = \frac{2}{2s+1}\mathbf{I}_1$$

$$\mathbf{y}_{11} = \frac{\mathbf{I}_1}{\mathbf{V}_1} = \frac{2s+1}{2} = s+0.5$$

$$\mathbf{I}_2 = \frac{(-1/s)}{(1/s)+2}\mathbf{I}_1 = \frac{-\mathbf{I}_1}{2s+1} = \frac{-\mathbf{V}_1}{2}$$

www.konkur.in

$$\mathbf{y}_{21} = \frac{\mathbf{I}_2}{\mathbf{V}_1} = -0.5$$

To get $\mathbf{y}_{22}$ and $\mathbf{y}_{12}$, refer to the circuit in Fig.(b).

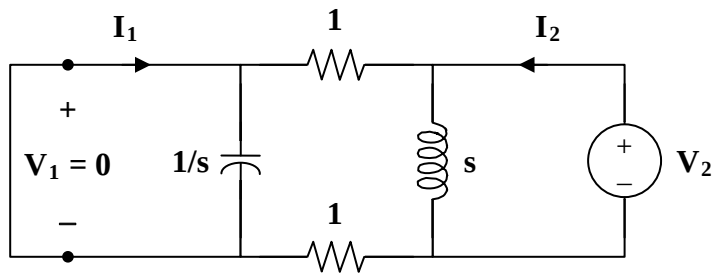

(b)

$$\mathbf{V}_2 = (s \parallel 2)\mathbf{I}_2 = \frac{2s}{s+2}\mathbf{I}_2$$

$$\mathbf{y}_{22} = \frac{\mathbf{I}_2}{\mathbf{V}_2} = \frac{s+2}{2s} = 0.5 + \frac{1}{s}$$

$$\mathbf{I}_1 = \frac{-s}{s+2}\mathbf{I}_2 = \frac{-s}{s+2} \cdot \frac{s+2}{2s}\mathbf{V}_2 = \frac{-\mathbf{V}_2}{2}$$

$$\mathbf{y}_{12} = \frac{\mathbf{I}_1}{\mathbf{V}_2} = -0.5$$

Thus,

$$[\mathbf{y}] = \begin{bmatrix} \mathbf{s+0.5} & \mathbf{-0.5} \\ \mathbf{-0.5} & \mathbf{0.5+1/s} \end{bmatrix}\mathbf{S}$$

Chapter 19, Solution 20.

To get y_{11} and y_{21}, consider the circuit below.

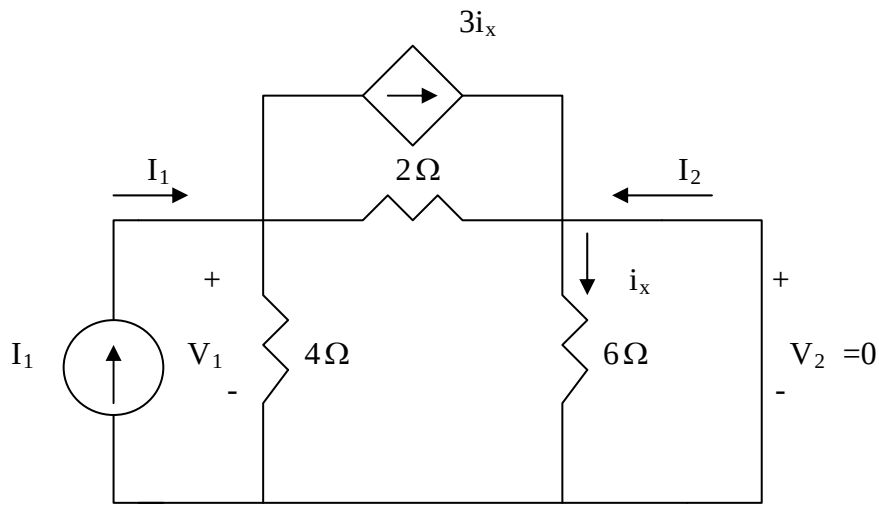

Since 6-ohm resistor is short-circuited, $i_x = 0$

$$V_1 = I_1(4//2) = \frac{8}{6}I_1 \longrightarrow y_{11} = \frac{I_1}{V_1} = 0.75$$

$$I_2 = -\frac{4}{4+2}I_1 = -\frac{2}{3}(\frac{6}{8}V_1) = -\frac{1}{2}V_1 \longrightarrow y_{21} = \frac{I_2}{V_1} = -0.5$$

To get y_{22} and y_{12}, consider the circuit below.

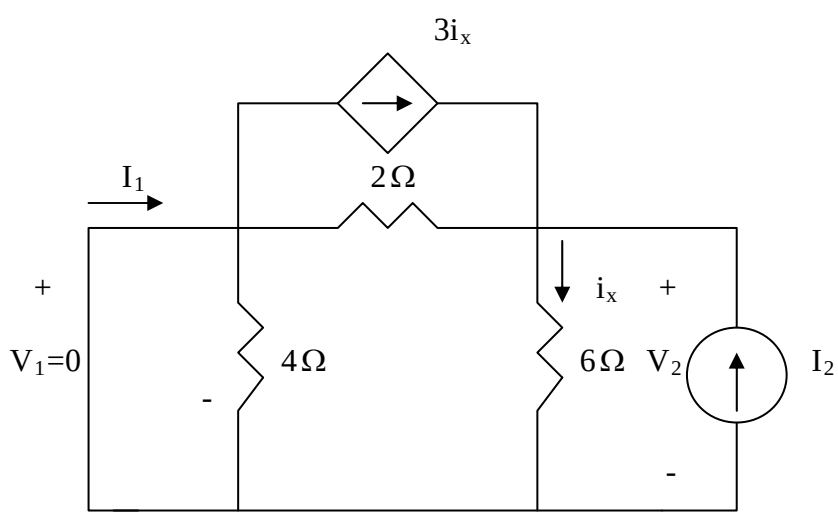

www.konkur.in

$$i_x = \frac{V_2}{6}, \quad I_2 = i_x - 3i_x + \frac{V_2}{2} = \frac{V_2}{6} \quad \longrightarrow \quad y_{22} = \frac{I_2}{V_2} = \frac{1}{6} = 0.1667$$

$$I_1 = 3i_x - \frac{V_2}{2} = 0 \quad \longrightarrow \quad y_{12} = \frac{I_1}{V_2} = 0$$

Thus,

$$\mathbf{[y]} = \underline{\begin{bmatrix} \mathbf{0.75} & \mathbf{0} \\ \mathbf{-0.5} & \mathbf{0.1667} \end{bmatrix} \mathbf{S}}$$

Chapter 19, Solution 21.

To get $\mathbf{y}_{11}$ and $\mathbf{y}_{21}$, refer to Fig. (a).

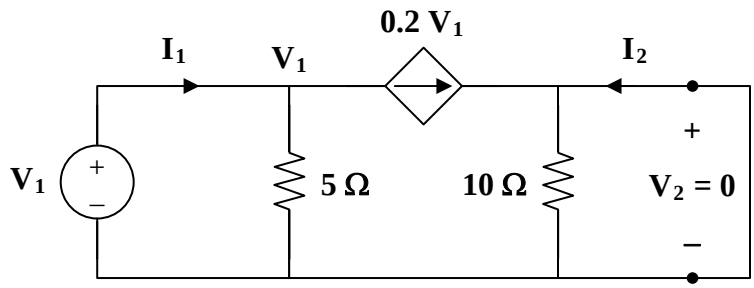

(a)

At node 1,

$$\mathbf{I}_1 = \frac{\mathbf{V}_1}{5} + 0.2\mathbf{V}_1 = 0.4\mathbf{V}_1 \longrightarrow \mathbf{y}_{11} = \frac{\mathbf{I}_1}{\mathbf{V}_1} = 0.4$$

$$\mathbf{I}_2 = -0.2\mathbf{V}_1 \longrightarrow \mathbf{y}_{21} = \frac{\mathbf{I}_2}{\mathbf{V}_1} = -0.2$$

To get $\mathbf{y}_{22}$ and $\mathbf{y}_{12}$, refer to the circuit in Fig. (b).

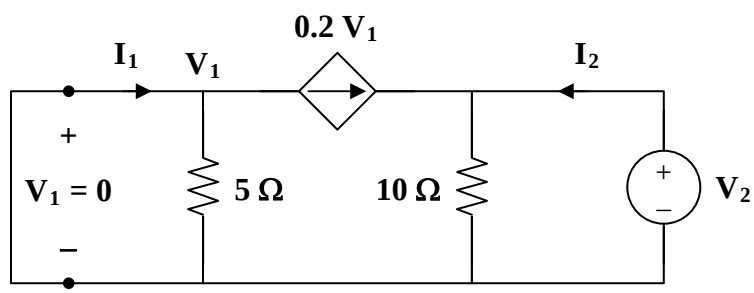

(b)

Since $\mathbf{V}_1 = 0$, the dependent current source can be replaced with an open circuit.

$$\mathbf{V}_2 = 10\mathbf{I}_2 \longrightarrow \mathbf{y}_{22} = \frac{\mathbf{I}_2}{\mathbf{V}_2} = \frac{1}{10} = 0.1$$

$$\mathbf{y}_{12} = \frac{\mathbf{I}_1}{\mathbf{V}_2} = 0$$

Thus,

$$[\mathbf{y}] = \begin{bmatrix} 0.4 & 0 \\ -0.2 & 0.1 \end{bmatrix} \text{S}$$

www.konkur.in

Consequently, **the y parameter equivalent circuit is shown in Fig. (c)**.

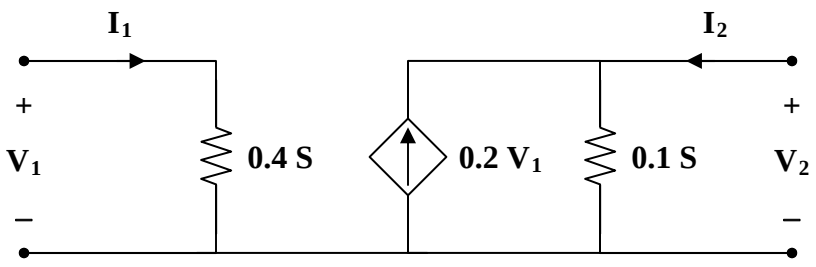

(c)

Chapter 19, Solution 22.

To obtain y_{11} and y_{21}, consider the circuit below.

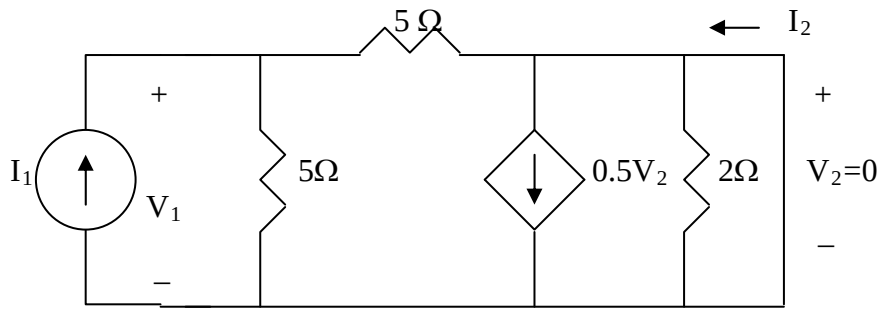

The 2-Ω resistor is short-circuited.

$$V_1 = 5\frac{I_1}{2} \longrightarrow y_{11} = \frac{I_1}{V_1} = \frac{2}{5} = 0.4$$

$$I_2 = \frac{1}{2}I_1 \longrightarrow y_{21} = \frac{I_2}{V_1} = \frac{\frac{1}{2}I_1}{2.5I_1} = 0.2$$

To obtain y_{12} and y_{22}, consider the circuit below.

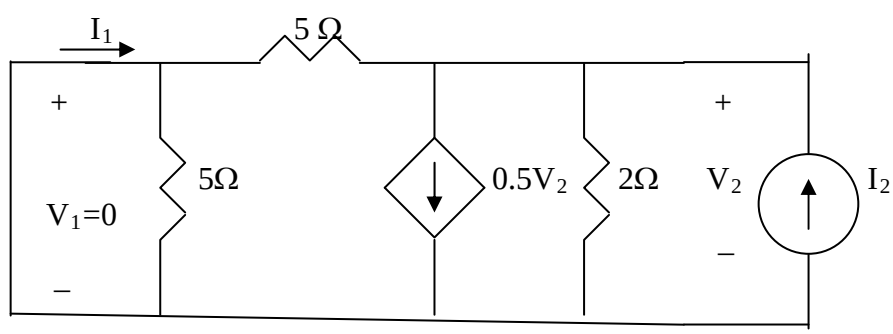

At the top node, KCL gives

$$I_2 = 0.5V_2 + \frac{V_2}{2} + \frac{V_2}{5} = 1.2V_2 \longrightarrow y_{22} = \frac{I_2}{V_2} = 1.2$$

$$I_1 = -\frac{V_2}{5} = -0.2V_2 \longrightarrow y_{12} = \frac{I_1}{V_2} = -0.2$$

Hence,

$$[y] = \begin{bmatrix} 0.4 & -0.2 \\ 0.2 & 1.2 \end{bmatrix} \text{S}$$

Chapter 19, Solution 23.

(a)

$$1/(-y_{12}) = 1//\frac{1}{s} = \frac{1}{s+1} \longrightarrow y_{12} = -(s+1)$$

$$y_{11} + y_{12} = 1 \longrightarrow y_{11} = 1 - y_{12} = 1 + (s+1) = s+2$$

$$y_{22} + y_{12} = s \longrightarrow y_{22} = s - y_{12} = \frac{1}{s} + (s+1) = \frac{s^2+s+1}{s}$$

$$[y] = \begin{bmatrix} s+2 & -(s+1) \\ -(s+1) & \frac{s^2+s+1}{s} \end{bmatrix}$$

(b) Consider the network below.

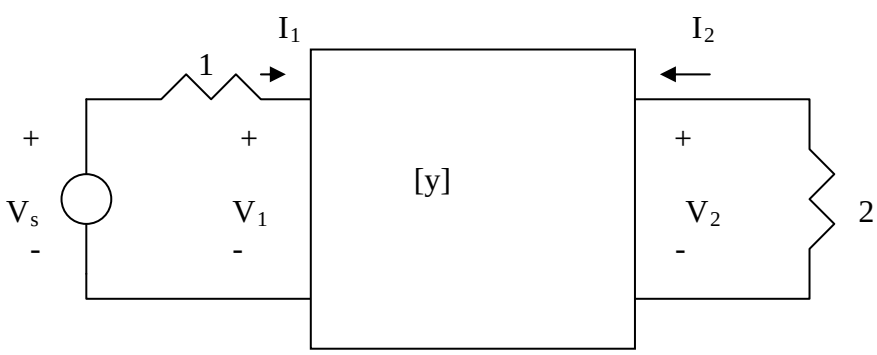

$$V_s = I_1 + V_1 \quad (1)$$

$$V_2 = -2I_2 \quad (2)$$

$$I_1 = y_{11}V_1 + y_{12}V_2 \quad (3)$$

$$I_2 = y_{21}V_1 + y_{22}V_2 \quad (4)$$

From (1) and (3)

www.konkur.in

$$V_s - V_1 = y_{11}V_1 + y_{12}V_2 \quad \longrightarrow \quad V_s = (1 + y_{11})V_1 + y_{12}V_2 \qquad (5)$$

From (2) and (4),

$$-0.5V_2 = y_{21}V_1 + y_{22}V_2 \quad \longrightarrow \quad V_1 = -\frac{1}{y_{21}}(0.5 + y_{22})V_2 \qquad (6)$$

Substituting (6) into (5),

$$\mathbf{V_s = -\frac{(1+y_{11})(0.5+y_{22})}{y_{21}}V_2 + y_{12}V_2}$$

$$\mathbf{= \frac{2}{s} \quad \longrightarrow \quad V_2 = \frac{2/s}{\left[y_{12} - \frac{1}{y_{21}}(1+y_{11})(0.5+y_{22})\right]}}$$

$$\mathbf{V_2 = \frac{2/s}{-(s+1) + \frac{1}{s+1}(1+s+2)\left(0.5 + \frac{s^2+s+1}{s}\right)} = \frac{2/s}{\frac{-s^3 - s^2 - s^2 - s + (s+3)(0.5s + s^2 + s + 1)}{s(s+1)}}}$$

$$\mathbf{= \frac{2(s+1)}{-s^3 - 2s^2 - s + s^3 + 1.5s^2 + s + 3s^2 + 4.5s + 3} = \frac{2(s+1)}{2.5s^2 + 4.5s + 3} = \frac{0.8(s+1)}{s^2 1.8s + 1.2}}$$

www.konkur.in

Chapter 19, Solution 24.

Since this is a reciprocal network, **a Π network is appropriate, as shown below**.

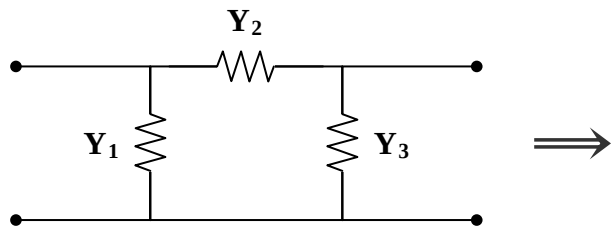

(a)

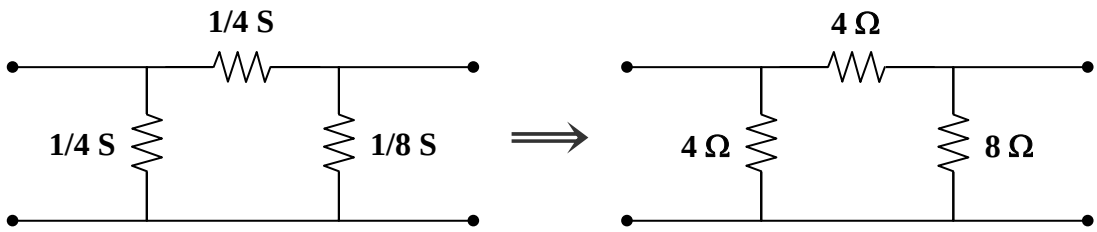

(b) **(c)**

$$\mathbf{Y}_1 = \mathbf{y}_{11} + \mathbf{y}_{12} = \frac{1}{2} - \frac{1}{4} = \frac{1}{4}\,\text{S}, \qquad \mathbf{Z}_1 = \mathbf{4\,\Omega}$$

$$\mathbf{Y}_2 = -\mathbf{y}_{12} = \frac{1}{4}\,\text{S}, \qquad \mathbf{Z}_2 = \mathbf{4\,\Omega}$$

$$\mathbf{Y}_3 = \mathbf{y}_{22} + \mathbf{y}_{21} = \frac{3}{8} - \frac{1}{4} = \frac{1}{8}\,\text{S}, \qquad \mathbf{Z}_3 = \mathbf{8\,\Omega}$$

www.konkur.in

Chapter 19, Solution 25.

This is a reciprocal network and is shown below.

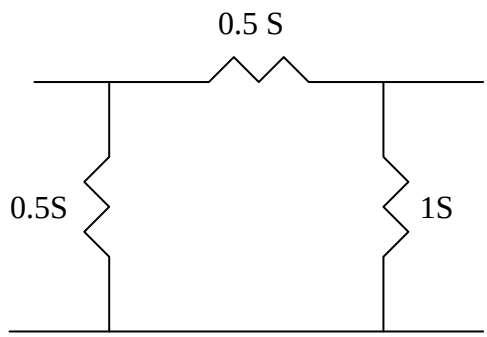

Chapter 19, Solution 26.

To get $\mathbf{y}_{11}$ and $\mathbf{y}_{21}$, consider the circuit in Fig. (a).

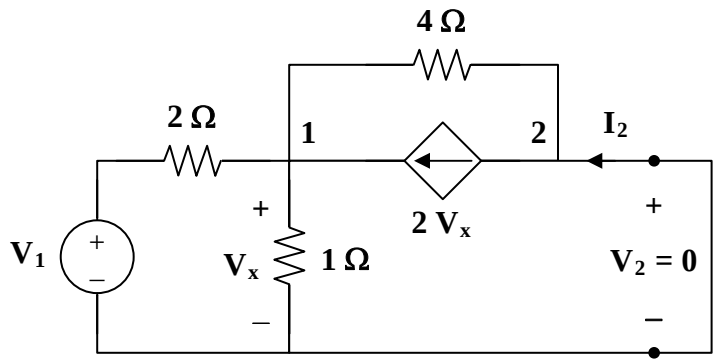

(a)

At node 1,

$$\frac{\mathbf{V}_1 - \mathbf{V}_x}{2} + 2\mathbf{V}_x = \frac{\mathbf{V}_x}{1} + \frac{\mathbf{V}_x}{4} \longrightarrow 2\mathbf{V}_1 = -\mathbf{V}_x \qquad (1)$$

But $$\mathbf{I}_1 = \frac{\mathbf{V}_1 - \mathbf{V}_x}{2} = \frac{\mathbf{V}_1 + 2\mathbf{V}_1}{2} = 1.5\mathbf{V}_1 \longrightarrow \mathbf{y}_{11} = \frac{\mathbf{I}_1}{\mathbf{V}_1} = 1.5$$

Also, $$\mathbf{I}_2 + \frac{\mathbf{V}_x}{4} = 2\mathbf{V}_x \longrightarrow \mathbf{I}_2 = 1.75\mathbf{V}_x = -3.5\mathbf{V}_1$$

$$\mathbf{y}_{21} = \frac{\mathbf{I}_2}{\mathbf{V}_1} = -3.5$$

To get $\mathbf{y}_{22}$ and $\mathbf{y}_{12}$, consider the circuit in Fig.(b).

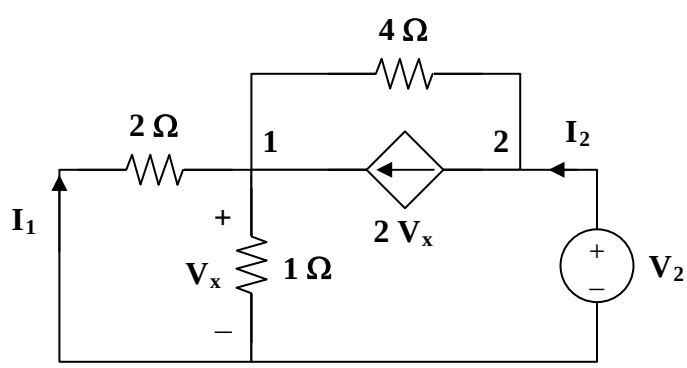

(b)

At node 2,

$$\mathbf{I}_2 = 2\mathbf{V}_x + \frac{\mathbf{V}_2 - \mathbf{V}_x}{4} \qquad (2)$$

www.konkur.in

At node 1,

$$2\mathbf{V}_x + \frac{\mathbf{V}_2 - \mathbf{V}_x}{4} = \frac{\mathbf{V}_x}{2} + \frac{\mathbf{V}_x}{1} = \frac{3}{2}\mathbf{V}_x \longrightarrow \mathbf{V}_2 = -\mathbf{V}_x \qquad (3)$$

Substituting (3) into (2) gives

$$\mathbf{I}_2 = 2\mathbf{V}_x - \frac{1}{2}\mathbf{V}_x = 1.5\mathbf{V}_x = -1.5\mathbf{V}_2$$

$$\mathbf{y}_{22} = \frac{\mathbf{I}_2}{\mathbf{V}_2} = -1.5$$

$$\mathbf{I}_1 = \frac{-\mathbf{V}_x}{2} = \frac{\mathbf{V}_2}{2} \longrightarrow \mathbf{y}_{12} = \frac{\mathbf{I}_1}{\mathbf{V}_2} = 0.5$$

Thus,

$$[\mathbf{y}] = \begin{bmatrix} \mathbf{1.5} & \mathbf{0.5} \\ \mathbf{-3.5} & \mathbf{-1.5} \end{bmatrix}\mathbf{S}$$

www.konkur.in

Chapter 19, Solution 27.

Consider the circuit in Fig. (a).

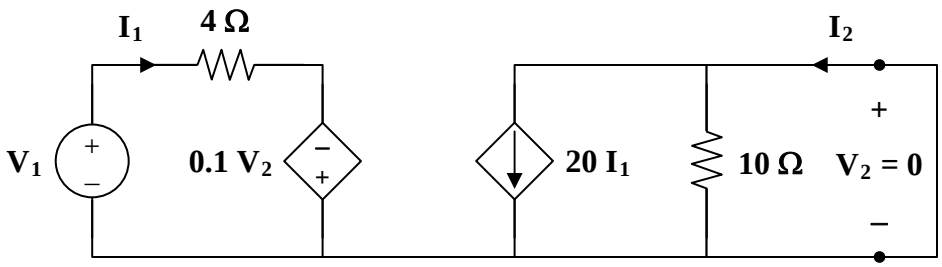

(a)

$$\mathbf{V}_1 = 4\mathbf{I}_1 \longrightarrow \mathbf{y}_{11} = \frac{\mathbf{I}_1}{\mathbf{V}_1} = \frac{\mathbf{I}_1}{4\mathbf{I}_1} = 0.25$$

$$\mathbf{I}_2 = 20\mathbf{I}_1 = 5\mathbf{V}_1 \longrightarrow \mathbf{y}_{21} = \frac{\mathbf{I}_2}{\mathbf{V}_1} = 5$$

Consider the circuit in Fig. (b).

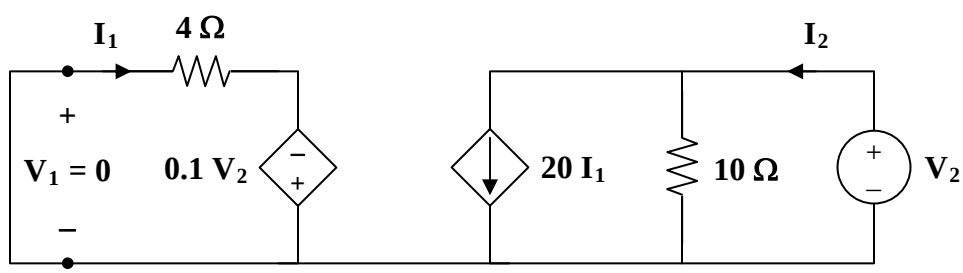

(b)

$$4\mathbf{I}_1 = 0.1\mathbf{V}_2 \longrightarrow \mathbf{y}_{12} = \frac{\mathbf{I}_1}{\mathbf{V}_2} = \frac{0.1}{4} = 0.025$$

$$\mathbf{I}_2 = 20\mathbf{I}_1 + \frac{\mathbf{V}_2}{10} = 0.5\mathbf{V}_2 + 0.1\mathbf{V}_2 = 0.6\mathbf{V}_2 \longrightarrow \mathbf{y}_{22} = \frac{\mathbf{I}_2}{\mathbf{V}_2} = 0.6$$

Thus,

$$[\mathbf{y}] = \begin{bmatrix} \mathbf{0.25} & \mathbf{0.025} \\ \mathbf{5} & \mathbf{0.6} \end{bmatrix} \mathbf{S}$$

Alternatively, from the given circuit,

$$\mathbf{V}_1 = 4\mathbf{I}_1 - 0.1\mathbf{V}_2$$

www.konkur.in

$$\mathbf{I}_2 = 20\mathbf{I}_1 + 0.1\mathbf{V}_2$$

Comparing these with the equations for the h parameters show that

$$\mathbf{h}_{11} = 4, \qquad \mathbf{h}_{12} = -0.1, \qquad \mathbf{h}_{21} = 20, \qquad \mathbf{h}_{22} = 0.1$$

Using Table 18.1,

$$\mathbf{y}_{11} = \frac{\mathbf{1}}{\mathbf{h}_{11}} = \frac{\mathbf{1}}{\mathbf{4}} = \mathbf{0.25\,S}, \qquad \mathbf{y}_{12} = \frac{-\mathbf{h}_{12}}{\mathbf{h}_{11}} = \frac{\mathbf{0.1}}{\mathbf{4}} = \mathbf{0.025\,S}$$

$$\mathbf{y}_{21} = \frac{\mathbf{h}_{21}}{\mathbf{h}_{11}} = \frac{\mathbf{20}}{\mathbf{4}} = \mathbf{5\,S}, \qquad \mathbf{y}_{22} = \frac{\Delta_{\mathbf{h}}}{\mathbf{h}_{11}} = \frac{\mathbf{0.4+2}}{\mathbf{4}} = \mathbf{0.6\,S}$$

as above.

Chapter 19, Solution 28.

We obtain $\mathbf{y}_{11}$ and $\mathbf{y}_{21}$ by considering the circuit in Fig.(a).

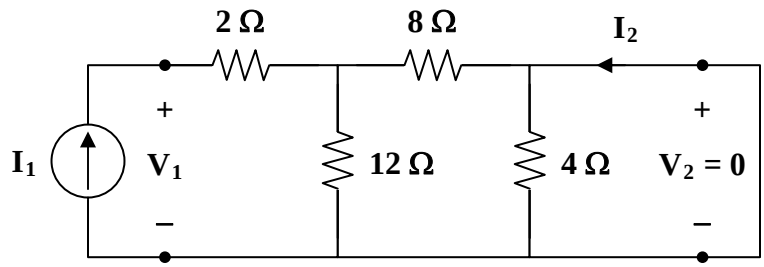

(a)

$\mathbf{Z_{in}} = 2 + (12||8) = 6.8\ \Omega$

$$\mathbf{y_{11}} = \frac{\mathbf{I_1}}{\mathbf{V_1}} = \frac{\mathbf{1}}{\mathbf{Z_{in}}} = \mathbf{147.06\ mS}$$

$\mathbf{I_2} = (-6/10)\mathbf{I_1} = (-0.6)(\mathbf{V_1}/6.8) = -0.08824$

$$\mathbf{y_{21}} = \frac{\mathbf{I_2}}{\mathbf{V_1}} = \mathbf{-88.24\ mS}$$

To get $\mathbf{y}_{22}$ and $\mathbf{y}_{12}$, consider the circuit in Fig. (b).

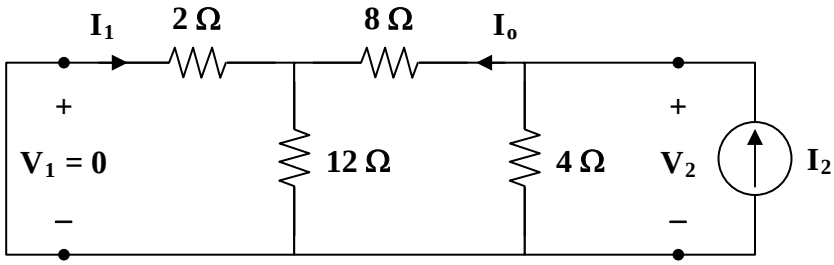

(b)

$(1/\mathbf{y_{22}}) = [4||(8+(12||2))] = [4||(8+(1.714286))] = 2.833333 = \mathbf{V_2/I_2}$

$\mathbf{y_{22}} = \mathbf{352.9\ mS}$

$\mathbf{I_1} = (-12/14)\mathbf{I_o} = -0.857143\mathbf{I_o}$ and $\mathbf{I_o} = [4/(4+(8+1.714286))]\mathbf{I_2}$
$= 0.29166667\mathbf{I_2} = \mathbf{V_2}/9.714286$

Thus, $\mathbf{I_1} = [(-0.857143)/9.714286]\mathbf{V_2} = -0.088235\mathbf{V_2}$ or

$\mathbf{y_{12} = I_1/V_2 = -88.24\ mS}$

www.konkur.in

Thus,

$$[\mathbf{y}] = \begin{bmatrix} \mathbf{147.06} & \mathbf{-88.24} \\ \mathbf{-88.24} & \mathbf{352.9} \end{bmatrix} \mathbf{mS}$$

We note that $\mathbf{I} = \mathbf{YV}$, $\mathbf{I_1} = 1$ A, and $-\mathbf{I_2} = \mathbf{V_2}/2$. We now have the following equations,

$1 = 0.14706\mathbf{V_1} - 0.08824\mathbf{V_2}$ and $\mathbf{I_2} = -0.08824\mathbf{V_1} + 0.3529\mathbf{V_2}$ or $-\mathbf{V_2}/2 = -0.08824\mathbf{V_1} + 0.3529\mathbf{V_2}$ or $0.08824\mathbf{V_1} = 0.8529\mathbf{V_2}$ which leads to
$\mathbf{V_1} = 9.6657\mathbf{V_2}$.

Substituting this into the first equation we get,

$1 = (1.42144–0.08824)\mathbf{V_2}$ or $\mathbf{V_2} = 0.75$ V.

Finally we get,

$$P_{2\Omega} = (0.75)^2/2 = \mathbf{281.2\ mW}.$$

Now to check our answer.

The equivalent circuit is shown in Fig. (c). After transforming the current source to a voltage source, we have the circuit in Fig. (d).

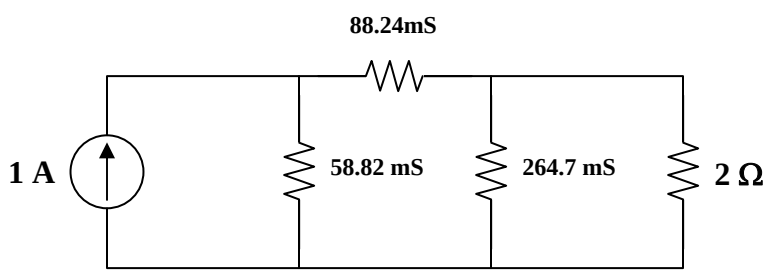

(c)

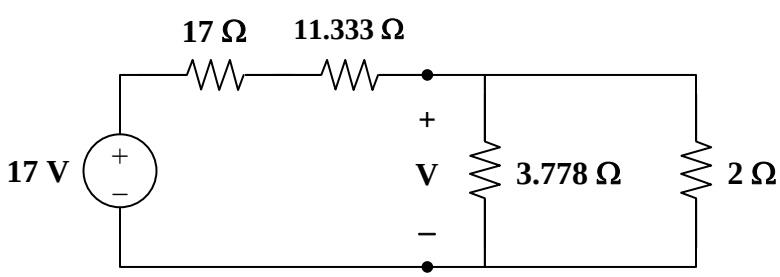

(d)

www.konkur.in

$$V = \frac{(2 \parallel 3.778)(17)}{(2 \parallel 3.778) + 17 + 11.333} = \frac{(1.3077)(17)}{1.3077 + 28.333} = 0.75\,\text{V}$$

$$P = \frac{V^2}{R} = \frac{(0.75)^2}{2} = \mathbf{281.2\ mW}$$

Chapter 19, Solution 29.

(a) Transforming the Δ subnetwork to Y gives the circuit in Fig. (a).

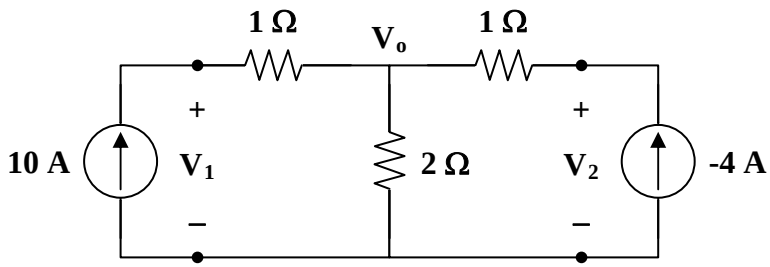

(a)

It is easy to get the z parameters

$$\mathbf{z}_{12} = \mathbf{z}_{21} = 2, \quad \mathbf{z}_{11} = 1 + 2 = 3, \quad \mathbf{z}_{22} = 3$$

$$\Delta_z = \mathbf{z}_{11}\mathbf{z}_{22} - \mathbf{z}_{12}\mathbf{z}_{21} = 9 - 4 = 5$$

$$\mathbf{y}_{11} = \frac{\mathbf{z}_{22}}{\Delta_z} = \frac{3}{5} = \mathbf{y}_{22}, \qquad \mathbf{y}_{12} = \mathbf{y}_{21} = \frac{-\mathbf{z}_{12}}{\Delta_z} = \frac{-2}{5}$$

Thus, the equivalent circuit is as shown in Fig. (b).

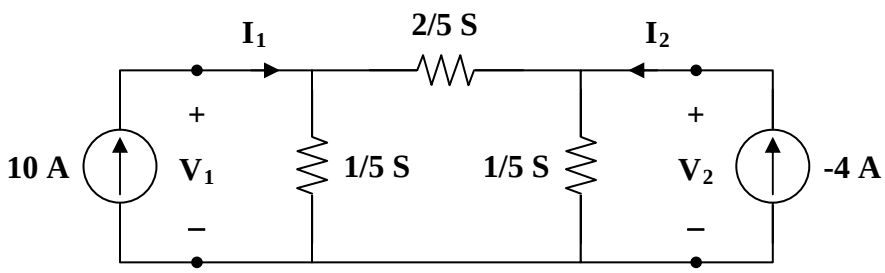

(b)

$$\mathbf{I}_1 = 10 = \frac{3}{5}\mathbf{V}_1 - \frac{2}{5}\mathbf{V}_2 \longrightarrow 50 = 3\mathbf{V}_1 - 2\mathbf{V}_2 \qquad (1)$$

$$\mathbf{I}_2 = -4 = \frac{-2}{5}\mathbf{V}_1 + \frac{3}{5}\mathbf{V}_2 \longrightarrow -20 = -2\mathbf{V}_1 + 3\mathbf{V}_2$$

$$10 = \mathbf{V}_1 - 1.5\mathbf{V}_2 \longrightarrow \mathbf{V}_1 = 10 + 1.5\mathbf{V}_2 \qquad (2)$$

Substituting (2) into (1),

$$50 = 30 + 4.5\mathbf{V}_2 - 2\mathbf{V}_2 \longrightarrow \mathbf{V}_2 = \mathbf{8\ V}$$

www.konkur.in

$$\mathbf{V}_1 = 10 + 1.5\mathbf{V}_2 = \mathbf{22\ V}$$

(b) For direct circuit analysis, consider the circuit in Fig. (a).

For the main non-reference node,

$$10 - 4 = \frac{\mathbf{V}_o}{2} \longrightarrow \mathbf{V}_o = 12$$

$$10 = \frac{\mathbf{V}_1 - \mathbf{V}_o}{1} \longrightarrow \mathbf{V}_1 = 10 + \mathbf{V}_o = \mathbf{22\ V}$$

$$-4 = \frac{\mathbf{V}_2 - \mathbf{V}_o}{1} \longrightarrow \mathbf{V}_2 = \mathbf{V}_o - 4 = \mathbf{8\ V}$$

www.konkur.in

Chapter 19, Solution 30.

(a) Convert to z parameters; then, convert to h parameters using Table 18.1.

$$\mathbf{z}_{11} = \mathbf{z}_{12} = \mathbf{z}_{21} = 60\,\Omega, \qquad \mathbf{z}_{22} = 100\,\Omega$$

$$\Delta_z = \mathbf{z}_{11}\,\mathbf{z}_{22} - \mathbf{z}_{12}\,\mathbf{z}_{21} = 6000 - 3600 = 2400$$

$$\mathbf{h}_{11} = \frac{\Delta_z}{\mathbf{z}_{22}} = \frac{2400}{100} = 24, \qquad \mathbf{h}_{12} = \frac{\mathbf{z}_{12}}{\mathbf{z}_{22}} = \frac{60}{100} = 0.6$$

$$\mathbf{h}_{21} = \frac{-\mathbf{z}_{21}}{\mathbf{z}_{22}} = -0.6, \qquad \mathbf{h}_{22} = \frac{1}{\mathbf{z}_{22}} = 0.01$$

Thus,

$$[\mathbf{h}] = \begin{bmatrix} \mathbf{24\,\Omega} & \mathbf{0.6} \\ \mathbf{-0.6} & \mathbf{0.01\,S} \end{bmatrix}$$

(b) Similarly,

$$\mathbf{z}_{11} = 30\,\Omega \qquad \mathbf{z}_{12} = \mathbf{z}_{21} = \mathbf{z}_{22} = 20\,\Omega$$

$$\Delta_z = 600 - 400 = 200$$

$$\mathbf{h}_{11} = \frac{200}{20} = 10 \qquad \mathbf{h}_{12} = \frac{20}{20} = 1$$

$$\mathbf{h}_{21} = -1 \qquad \mathbf{h}_{22} = \frac{1}{20} = 0.05$$

Thus,

$$[\mathbf{h}] = \begin{bmatrix} \mathbf{10\,\Omega} & \mathbf{1} \\ \mathbf{-1} & \mathbf{0.05\,S} \end{bmatrix}$$

Chapter 19, Solution 31.

We get $\mathbf{h}_{11}$ and $\mathbf{h}_{21}$ by considering the circuit in Fig. (a).

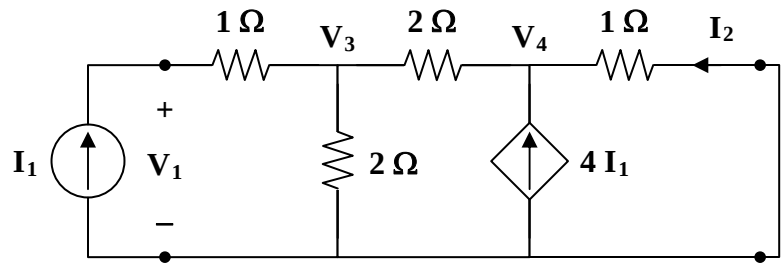

(a)

At node 1,

$$\mathbf{I}_1 = \frac{\mathbf{V}_3}{2} + \frac{\mathbf{V}_3 - \mathbf{V}_4}{2} \longrightarrow 2\mathbf{I}_1 = 2\mathbf{V}_3 - \mathbf{V}_4 \qquad (1)$$

At node 2,

$$\frac{\mathbf{V}_3 - \mathbf{V}_4}{2} + 4\mathbf{I}_1 = \frac{\mathbf{V}_4}{1}$$

$$8\mathbf{I}_1 = -\mathbf{V}_3 + 3\mathbf{V}_4 \longrightarrow 16\mathbf{I}_1 = -2\mathbf{V}_3 + 6\mathbf{V}_4 \qquad (2)$$

Adding (1) and (2),

$$18\mathbf{I}_1 = 5\mathbf{V}_4 \longrightarrow \mathbf{V}_4 = 3.6\mathbf{I}_1$$

$$\mathbf{V}_3 = 3\mathbf{V}_4 - 8\mathbf{I}_1 = 2.8\mathbf{I}_1$$

$$\mathbf{V}_1 = \mathbf{V}_3 + \mathbf{I}_1 = 3.8\mathbf{I}_1$$

$$\mathbf{h}_{11} = \frac{\mathbf{V}_1}{\mathbf{I}_1} = 3.8\,\Omega$$

$$\mathbf{I}_2 = \frac{-\mathbf{V}_4}{1} = -3.6\mathbf{I}_1 \longrightarrow \mathbf{h}_{21} = \frac{\mathbf{I}_2}{\mathbf{I}_1} = -3.6$$

To get $\mathbf{h}_{22}$ and $\mathbf{h}_{12}$, refer to the circuit in Fig. (b). The dependent current source can be replaced by an open circuit since $4\mathbf{I}_1 = 0$.

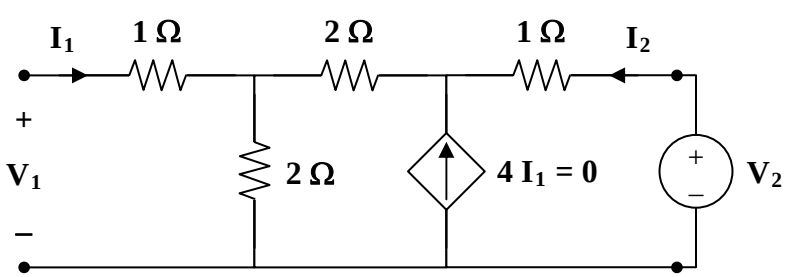

(b)

www.konkur.in

$$\mathbf{V}_1 = \frac{2}{2+2+1}\mathbf{V}_2 = \frac{2}{5}\mathbf{V}_2 \quad \longrightarrow \quad \mathbf{h}_{12} = \frac{\mathbf{V}_1}{\mathbf{V}_2} = 0.4$$

$$\mathbf{I}_2 = \frac{\mathbf{V}_2}{2+2+1} = \frac{\mathbf{V}_2}{5} \quad \longrightarrow \quad \mathbf{h}_{22} = \frac{\mathbf{I}_2}{\mathbf{V}_2} = \frac{1}{5} = 0.2\ \text{S}$$

Thus,

$$[\mathbf{h}] = \begin{bmatrix} \mathbf{38\,\Omega} & \mathbf{0.4} \\ \mathbf{-3.6} & \mathbf{0.2\ S} \end{bmatrix}$$

www.konkur.in

Chapter 19, Solution 32.

Using Fig. 19.90, design a problem to help other students to better understand how to find the *h* and *g* parameters for a circuit in the s-domain.

Although there are many ways to solve this problem, this is an example based on the same kind of problem asked in the third edition.

Problem

Find the *h* and *g* parameters of the two-port network in Fig.19.90 as functions of *s*.

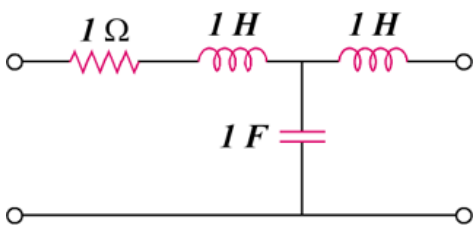

Figure 19.90

Solution

(a) We obtain $\mathbf{h}_{11}$ and $\mathbf{h}_{21}$ by referring to the circuit in Fig. (a).

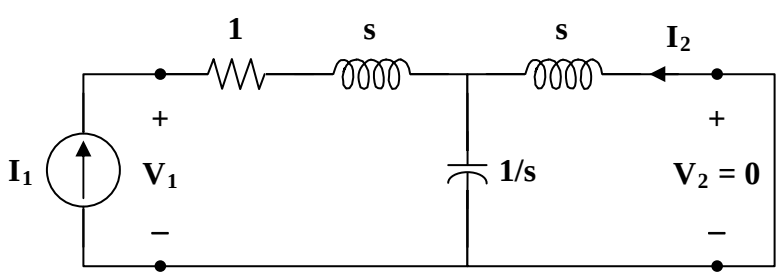

(a)

$$\mathbf{V}_1 = \left(1 + s + s \,\|\, \frac{1}{s}\right)\mathbf{I}_1 = \left(1 + s + \frac{s}{s^2+1}\right)\mathbf{I}_1$$

$$\mathbf{h}_{11} = \frac{\mathbf{V}_1}{\mathbf{I}_1} = s + 1 + \frac{s}{s^2+1}$$

By current division,

$$\mathbf{I}_2 = \frac{-1/s}{s + 1/s}\mathbf{I}_1 = \frac{-\mathbf{I}_1}{s+1} \longrightarrow \mathbf{h}_{21} = \frac{\mathbf{I}_2}{\mathbf{I}_1} = \frac{-1}{s^2+1}$$

To get $\mathbf{h}_{22}$ and $\mathbf{h}_{12}$, refer to Fig. (b).

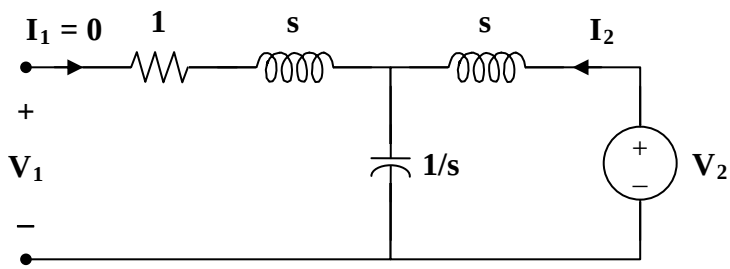

(b)

$$\mathbf{V}_1 = \frac{1/s}{s+1/s}\mathbf{V}_2 = \frac{\mathbf{V}_2}{s^2+1} \longrightarrow \mathbf{h}_{12} = \frac{\mathbf{V}_1}{\mathbf{V}_2} = \frac{1}{s^2+1}$$

$$\mathbf{V}_2 = \left(s+\frac{1}{s}\right)\mathbf{I}_2 \longrightarrow \mathbf{h}_{22} = \frac{\mathbf{I}_2}{\mathbf{V}_2} = \frac{1}{s+1/s} = \frac{s}{s^2+1}$$

Thus,

$$[\mathbf{h}] = \begin{bmatrix} s+1+\dfrac{s}{s^2+1} & \dfrac{1}{s^2+1} \\ \dfrac{-1}{s^2+1} & \dfrac{s}{s^2+1} \end{bmatrix}$$

(b) To get $\mathbf{g}_{11}$ and $\mathbf{g}_{21}$, refer to Fig. (c).

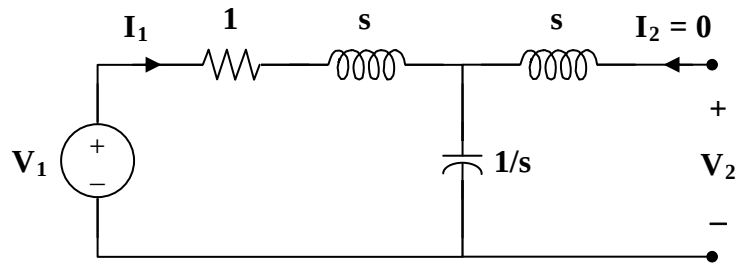

(c)

$$\mathbf{V}_1 = \left(1+s+\frac{1}{s}\right)\mathbf{I}_1 \longrightarrow \mathbf{g}_{11} = \frac{\mathbf{I}_1}{\mathbf{V}_1} = \frac{1}{1+s+1/s} = \frac{s}{s^2+s+1}$$

$$\mathbf{V}_2 = \frac{1/s}{1+s+1/s}\mathbf{V}_1 = \frac{\mathbf{V}_1}{s^2+s+1} \longrightarrow \mathbf{g}_{21} = \frac{\mathbf{V}_2}{\mathbf{V}_1} = \frac{1}{s^2+s+1}$$

To get $\mathbf{g}_{22}$ and $\mathbf{g}_{12}$, refer to Fig. (d).

www.konkur.in

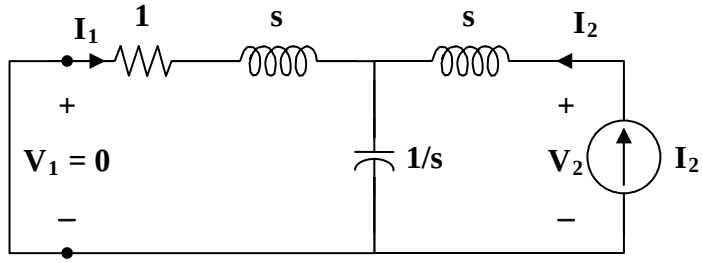

(d)

$$\mathbf{V}_2 = \left(s + \frac{1}{s} \,||\, (s+1)\right)\mathbf{I}_2 = \left(s + \frac{(s+1)/s}{1+s+1/s}\right)\mathbf{I}_2$$

$$\mathbf{g}_{22} = \frac{\mathbf{V}_2}{\mathbf{I}_2} = s + \frac{s+1}{s^2+s+1}$$

$$\mathbf{I}_1 = \frac{-1/s}{1+s+1/s}\mathbf{I}_2 = \frac{-\mathbf{I}_2}{s^2+s+1} \longrightarrow \mathbf{g}_{12} = \frac{\mathbf{I}_1}{\mathbf{I}_2} = \frac{-1}{s^2+s+1}$$

Thus,

$$[\mathbf{g}] = \begin{bmatrix} \dfrac{s}{s^2+s+1} & \dfrac{-1}{s^2+s+1} \\ \dfrac{1}{s^2+s+1} & s + \dfrac{s+1}{s^2+s+1} \end{bmatrix}$$

www.konkur.in

Chapter 19, Solution 33.

To get h_{11} and h_{21}, consider the circuit below.

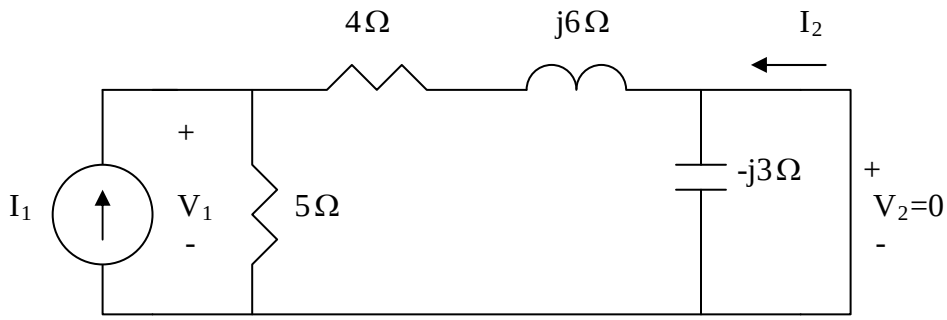

$$V_1 = 5//(4+j6)I_1 = \frac{5(4+j6)I_1}{9+j6} \qquad h_{11} = \frac{V_1}{I_1} = 3.0769 + j1.2821$$

Also, $I_2 = -\dfrac{5}{9+j6} I_1 \longrightarrow h_{21} = \dfrac{I_2}{I_1} = -0.3846 + j0.2564$

To get h_{22} and h_{12}, consider the circuit below.

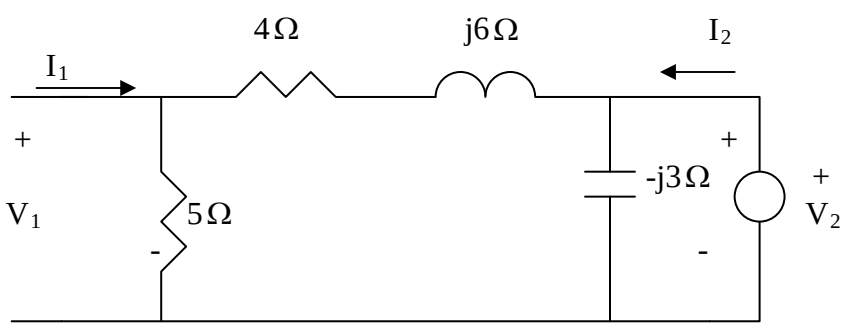

$$V_1 = \frac{5}{9+j6} V_2 \longrightarrow h_{12} = \frac{V_1}{V_2} = \frac{5}{9+j6} = 0.3846 - j0.2564$$

$$V_2 = -j3//(9+j6)I_2 \longrightarrow h_{22} = \frac{I_2}{V_2} = \frac{1}{-j3//(9+j6)} = \frac{9+j3}{-j3(9+j6)}$$
$$= 0.0769 + j0.2821$$

www.konkur.in

Thus,

$$[\mathbf{h}] = \begin{bmatrix} (3.077 + j1.2821)\ \Omega & 0.3846 - j0.2564 \\ -0.3846 + j0.2564 & (0.0769 + j0.2821)\ \mathrm{S} \end{bmatrix}$$

Chapter 19, Solution 34.

Refer to Fig. (a) to get $\mathbf{h}_{11}$ and $\mathbf{h}_{21}$.

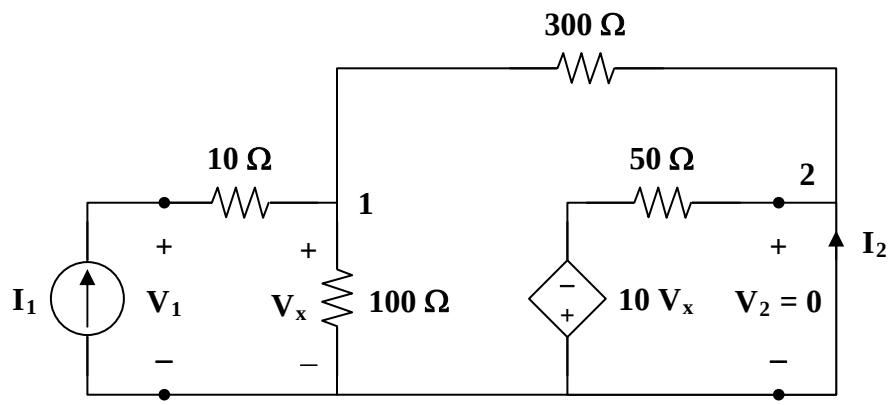

(a)

At node 1,

$$\mathbf{I}_1 = \frac{\mathbf{V}_x}{100} + \frac{\mathbf{V}_x - 0}{300} \longrightarrow 300\mathbf{I}_1 = 4\mathbf{V}_x \qquad (1)$$

$$\mathbf{V}_x = \frac{300}{4}\mathbf{I}_1 = 75\mathbf{I}_1$$

But $\quad \mathbf{V}_1 = 10\mathbf{I}_1 + \mathbf{V}_x = 85\mathbf{I}_1 \longrightarrow \mathbf{h}_{11} = \dfrac{\mathbf{V}_1}{\mathbf{I}_1} = 85\,\Omega$

At node 2,

$$\mathbf{I}_2 = \frac{0 + 10\mathbf{V}_x}{50} - \frac{\mathbf{V}_x}{300} = \frac{\mathbf{V}_x}{5} - \frac{\mathbf{V}_x}{300} = \frac{75}{5}\mathbf{I}_1 - \frac{75}{300}\mathbf{I}_1 = 14.75\mathbf{I}_1$$

$$\mathbf{h}_{21} = \frac{\mathbf{I}_2}{\mathbf{I}_1} = 14.75$$

To get $\mathbf{h}_{22}$ and $\mathbf{h}_{12}$, refer to Fig. (b).

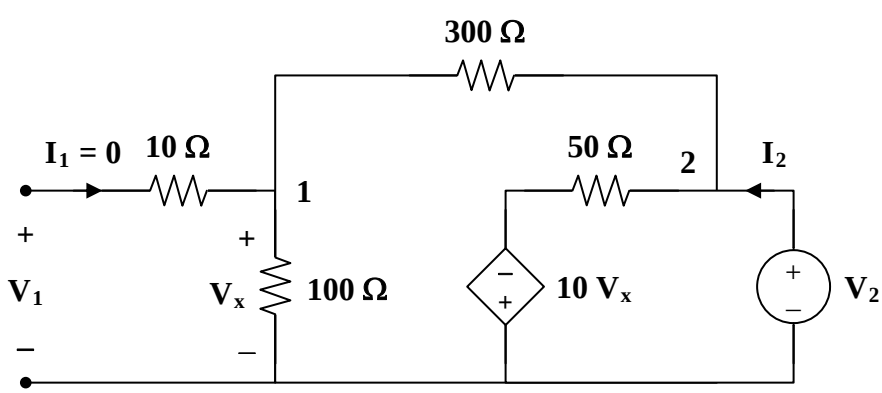

(b)

At node 2,

$$\mathbf{I}_2 = \frac{\mathbf{V}_2}{400} + \frac{\mathbf{V}_2 + 10\mathbf{V}_x}{50} \longrightarrow 400\mathbf{I}_2 = 9\mathbf{V}_2 + 80\mathbf{V}_x$$

But $\quad \mathbf{V}_x = \frac{100}{400}\mathbf{V}_2 = \frac{\mathbf{V}_2}{4}$

Hence, $\quad 400\mathbf{I}_2 = 9\mathbf{V}_2 + 20\mathbf{V}_2 = 29\mathbf{V}_2$

$$\mathbf{h}_{22} = \frac{\mathbf{I}_2}{\mathbf{V}_2} = \frac{29}{400} = 0.0725\text{ S}$$

$$\mathbf{V}_1 = \mathbf{V}_x = \frac{\mathbf{V}_2}{4} \longrightarrow \mathbf{h}_{12} = \frac{\mathbf{V}_1}{\mathbf{V}_2} = \frac{1}{4} = 0.25$$

$$[\mathbf{h}] = \begin{bmatrix} \mathbf{85\,\Omega} & \mathbf{0.25} \\ \mathbf{14.75} & \mathbf{0.0725\text{ S}} \end{bmatrix}$$

To get $\mathbf{g}_{11}$ and $\mathbf{g}_{21}$, refer to Fig. (c).

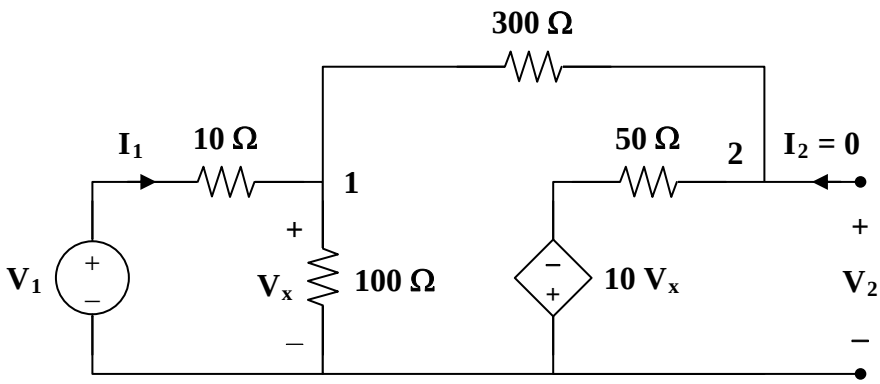

(c)

At node 1,

$$\mathbf{I}_1 = \frac{\mathbf{V}_x}{100} + \frac{\mathbf{V}_x + 10\mathbf{V}_x}{350} \longrightarrow 350\mathbf{I}_1 = 14.5\mathbf{V}_x \qquad (2)$$

But $\quad \mathbf{I}_1 = \frac{\mathbf{V}_1 - \mathbf{V}_x}{10} \longrightarrow 10\mathbf{I}_1 = \mathbf{V}_1 - \mathbf{V}_x$

or $\quad \mathbf{V}_x = \mathbf{V}_1 - 10\mathbf{I}_1 \qquad (3)$

Substituting (3) into (2) gives

$$350\mathbf{I}_1 = 14.5\mathbf{V}_1 - 145\mathbf{I}_1 \longrightarrow 495\mathbf{I}_1 = 14.5\mathbf{V}_1$$

$$\mathbf{g}_{11} = \frac{\mathbf{I}_1}{\mathbf{V}_1} = \frac{14.5}{495} = 0.02929 \text{ S}$$

At node 2,

$$\mathbf{V}_2 = (50)\left(\frac{11}{350}\mathbf{V}_x\right) - 10\,\mathbf{V}_x = -8.4286\,\mathbf{V}_x$$

$$= -8.4286\,\mathbf{V}_1 + 84.286\,\mathbf{I}_1 = -8.4286\,\mathbf{V}_1 + (84.286)\left(\frac{14.5}{495}\right)\mathbf{V}_1$$

$$\mathbf{V}_2 = -5.96\,\mathbf{V}_1 \longrightarrow \mathbf{g}_{21} = \frac{\mathbf{V}_2}{\mathbf{V}_1} = -5.96$$

To get $\mathbf{g}_{22}$ and $\mathbf{g}_{12}$, refer to Fig. (d).

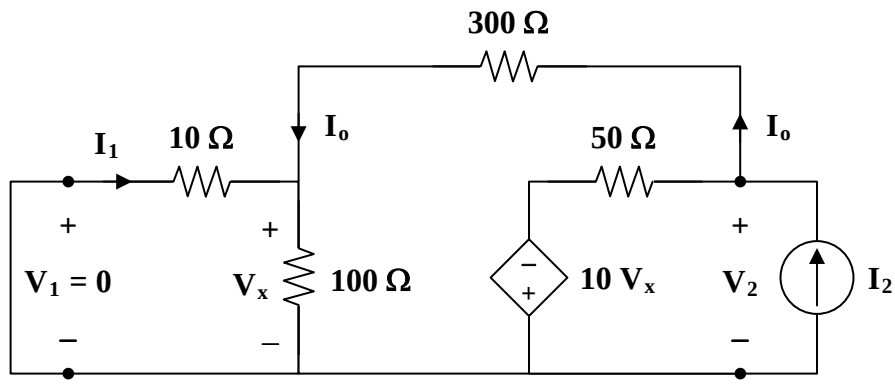

(d)

$$10 \,||\, 100 = 9.091$$

$$\mathbf{I}_2 = \frac{\mathbf{V}_2 + 10\,\mathbf{V}_x}{50} + \frac{\mathbf{V}_2}{300 + 9.091}$$

$$309.091\,\mathbf{I}_2 = 7.1818\,\mathbf{V}_2 + 61.818\,\mathbf{V}_x \qquad (4)$$

But $$\mathbf{V}_x = \frac{9.091}{309.091}\mathbf{V}_2 = 0.02941\,\mathbf{V}_2 \qquad (5)$$

Substituting (5) into (4) gives

$$309.091\,\mathbf{I}_2 = 9\,\mathbf{V}_2$$

$$\mathbf{g}_{22} = \frac{\mathbf{V}_2}{\mathbf{I}_2} = 34.34\,\Omega$$

www.konkur.in

$$\mathbf{I}_o = \frac{\mathbf{V}_2}{309.091} = \frac{34.34\,\mathbf{I}_2}{309.091}$$

$$\mathbf{I}_1 = \frac{-100}{110}\mathbf{I}_o = \frac{-34.34\,\mathbf{I}_2}{(1.1)(309.091)}$$

$$\mathbf{g}_{12} = \frac{\mathbf{I}_1}{\mathbf{I}_2} = -0.101$$

Thus,

$$[\mathbf{g}] = \begin{bmatrix} \mathbf{0.02929\ S} & \mathbf{-0.101} \\ \mathbf{-5.96} & \mathbf{34.34\,\Omega} \end{bmatrix}$$

www.konkur.in

Chapter 19, Solution 35.

To get $\mathbf{h}_{11}$ and $\mathbf{h}_{21}$ consider the circuit in Fig. (a).

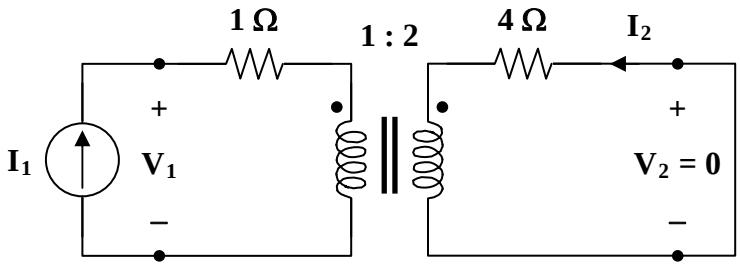

(a)

$$Z_R = \frac{4}{n^2} = \frac{4}{4} = 1$$

$$\mathbf{V}_1 = (1+1)\mathbf{I}_1 = 2\mathbf{I}_1 \longrightarrow \mathbf{h}_{11} = \frac{\mathbf{V}_1}{\mathbf{I}_1} = 2\,\Omega$$

$$\frac{\mathbf{I}_1}{\mathbf{I}_2} = \frac{-N_2}{N_1} = -2 \longrightarrow \mathbf{h}_{21} = \frac{\mathbf{I}_2}{\mathbf{I}_1} = \frac{-1}{2} = -0.5$$

To get $\mathbf{h}_{22}$ and $\mathbf{h}_{12}$, refer to Fig. (b).

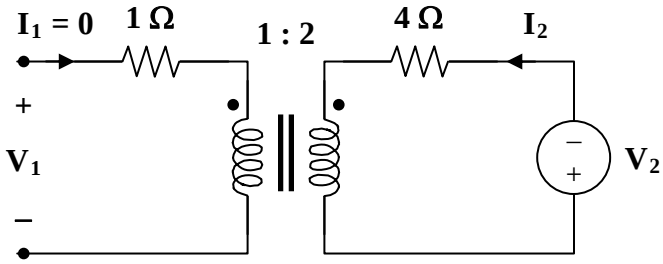

(b)

Since $\mathbf{I}_1 = 0$, $\mathbf{I}_2 = 0$.
Hence, $\mathbf{h}_{22} = 0$.

www.konkur.in

At the terminals of the transformer, we have $\mathbf{V}_1$ and $\mathbf{V}_2$ which are related as

$$\frac{\mathbf{V}_2}{\mathbf{V}_1} = \frac{N_2}{N_1} = n = 2 \longrightarrow \mathbf{h}_{12} = \frac{\mathbf{V}_1}{\mathbf{V}_2} = \frac{1}{2} = 0.5$$

Thus,

$$[\mathbf{h}] = \begin{bmatrix} \mathbf{2\,\Omega} & \mathbf{0.5} \\ \mathbf{-0.5} & \mathbf{0} \end{bmatrix}$$

www.konkur.in

Chapter 19, Solution 36.

We replace the two-port by its equivalent circuit as shown below.

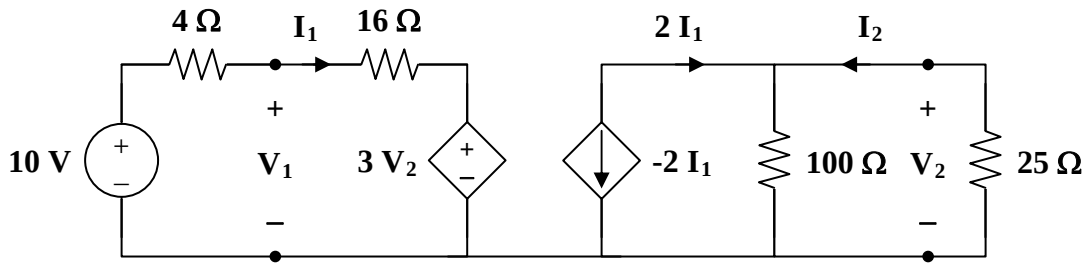

$$100 \parallel 25 = 20\,\Omega$$

$$\mathbf{V}_2 = (20)(2\mathbf{I}_1) = 40\mathbf{I}_1 \qquad (1)$$

$$-10 + 20\mathbf{I}_1 + 3\mathbf{V}_2 = 0$$
$$10 = 20\mathbf{I}_1 + (3)(40\mathbf{I}_1) = 140\mathbf{I}_1$$

$$\mathbf{I}_1 = \frac{1}{14}, \qquad \mathbf{V}_2 = \frac{40}{14}$$

$$\mathbf{V}_1 = 16\mathbf{I}_1 + 3\mathbf{V}_2 = \frac{136}{14}$$

$$\mathbf{I}_2 = \left(\frac{100}{125}\right)(2\mathbf{I}_1) = \frac{-8}{70}$$

(a) $\dfrac{\mathbf{V}_2}{\mathbf{V}_1} = \dfrac{40}{136} = \mathbf{0.2941}$

(b) $\dfrac{\mathbf{I}_2}{\mathbf{I}_1} = \mathbf{-1.6}$

(c) $\dfrac{\mathbf{I}_1}{\mathbf{V}_1} = \dfrac{1}{136} = \mathbf{7.353 \times 10^{-3}\ S}$

(d) $\dfrac{\mathbf{V}_2}{\mathbf{I}_1} = \dfrac{40}{1} = \mathbf{40\,\Omega}$

Chapter 19, Solution 37.

(a) We first obtain the h parameters. To get $\mathbf{h}_{11}$ and $\mathbf{h}_{21}$ refer to Fig. (a).

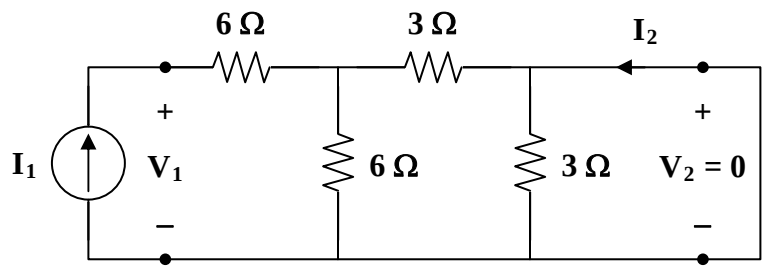

(a)

$$3 \| 6 = 2$$

$$\mathbf{V}_1 = (6+2)\mathbf{I}_1 = 8\mathbf{I}_1 \longrightarrow \mathbf{h}_{11} = \frac{\mathbf{V}_1}{\mathbf{I}_1} = 8\,\Omega$$

$$\mathbf{I}_2 = \frac{-6}{3+6}\mathbf{I}_1 = \frac{-2}{3}\mathbf{I}_1 \longrightarrow \mathbf{h}_{21} = \frac{\mathbf{I}_2}{\mathbf{I}_1} = \frac{-2}{3}$$

To get $\mathbf{h}_{22}$ and $\mathbf{h}_{12}$, refer to the circuit in Fig. (b).

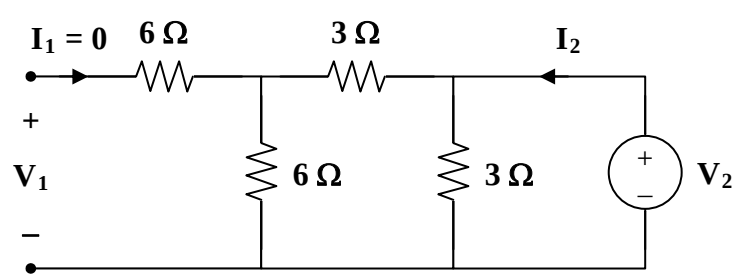

(b)

$$3 \| 9 = \frac{9}{4}$$

$$\mathbf{V}_2 = \frac{9}{4}\mathbf{I}_2 \longrightarrow \mathbf{h}_{22} = \frac{\mathbf{I}_2}{\mathbf{V}_2} = \frac{4}{9}$$

$$\mathbf{V}_1 = \frac{6}{6+3}\mathbf{V}_2 = \frac{2}{3}\mathbf{V}_2 \longrightarrow \mathbf{h}_{12} = \frac{\mathbf{V}_1}{\mathbf{V}_2} = \frac{2}{3}$$

$$[\mathbf{h}] = \begin{bmatrix} 8\,\Omega & \frac{2}{3} \\ \frac{-2}{3} & \frac{4}{9}\,\mathrm{S} \end{bmatrix}$$

The equivalent circuit of the given circuit is shown in Fig. (c).

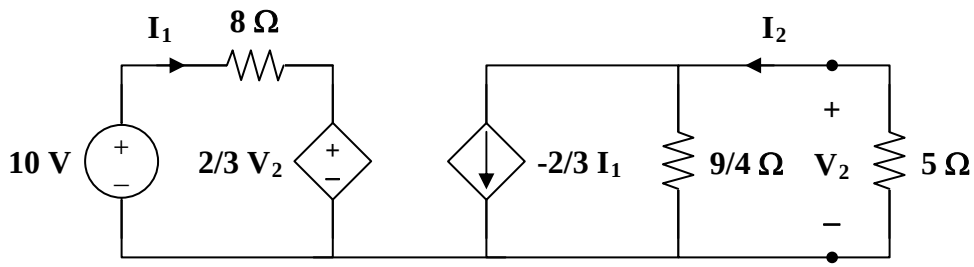

(c)

$$8\mathbf{I}_1 + \frac{2}{3}\mathbf{V}_2 = 10 \qquad (1)$$

$$\mathbf{V}_2 = \frac{2}{3}\mathbf{I}_1\left(5 \parallel \frac{9}{4}\right) = \frac{2}{3}\mathbf{I}_1\left(\frac{45}{29}\right) = \frac{30}{29}\mathbf{I}_1$$

$$\mathbf{I}_1 = \frac{29}{30}\mathbf{V}_2 \qquad (2)$$

Substituting (2) into (1),

$$(8)\left(\frac{29}{30}\right)\mathbf{V}_2 + \frac{2}{3}\mathbf{V}_2 = 10$$

$$\mathbf{V}_2 = \frac{300}{252} = \underline{\mathbf{1.19\ V}}$$

(b) By direct analysis, refer to Fig.(d).

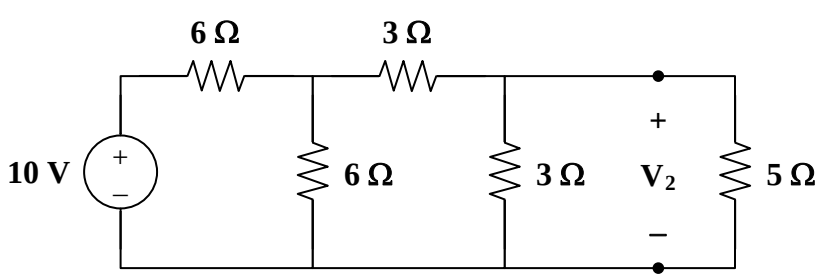

(d)

www.konkur.in

Transform the 10-V voltage source to a $\frac{10}{6}$-A current source. Since $6 \parallel 6 = 3\,\Omega$, we combine the two 6-Ω resistors in parallel and transform the current source back to $\frac{10}{6} \times 3 = 5\text{ V}$ voltage source shown in Fig. (e).

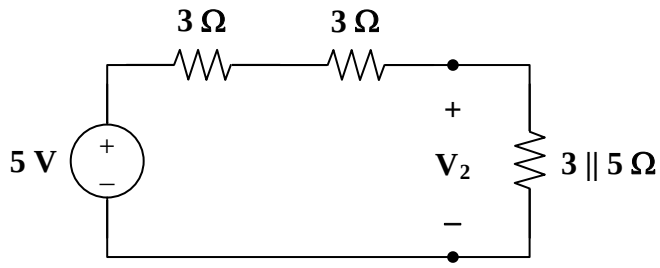

(e)

$$3 \parallel 5 = \frac{(3)(5)}{8} = \frac{15}{8}$$

$$\mathbf{V}_2 = \frac{15/8}{6 + 15/8}(5) = \frac{75}{63} = \mathbf{1.1905\ V}$$

www.konkur.in

Chapter 19, Solution 38.

From eq. (19.75),

$$Z_{in} = h_{ie} - \frac{h_{re}h_{fe}R_L}{1+h_{oe}R_L} = h_{11} - \frac{h_{12}h_{21}R_L}{1+h_{22}R_L} = 600 - \frac{0.04x30x400}{1+2x10^{-3}x400} = \underline{333.33\ \Omega}$$

From eq. (19.79),

$$Z_{out} = \frac{R_s + h_{ie}}{(R_s + h_{ie})h_{0e} - h_{re}h_{fe}} = \frac{R_s + h_{11}}{(R_s + h_{11})h_{22} - h_{21}h_{12}} = \frac{2,000 + 600}{2600x2x10^{-3} - 30x0.04} = \underline{650\ \Omega}$$

www.konkur.in

Chapter 19, Solution 39.

We obtain g_{11} and g_{21} using the circuit below.

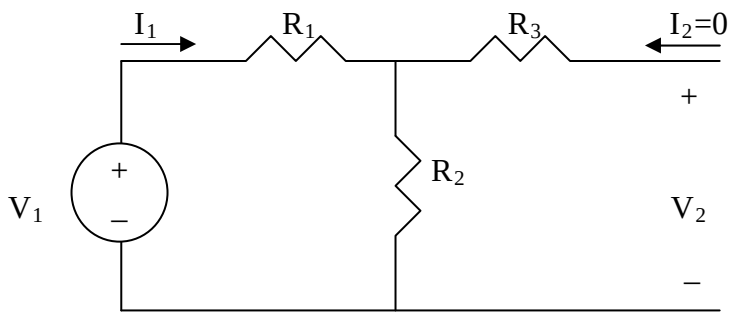

$$I_1 = \frac{V_1}{R_1 + R_2} \longrightarrow g_{11} = \frac{I_1}{V_1} = \underline{\frac{1}{R_1 + R_2}}$$

By voltage division,

$$V_2 = \frac{R_2}{R_1 + R_2} V_1 \longrightarrow g_{21} = \frac{V_2}{V_1} = \underline{\frac{R_2}{R_1 + R_2}}$$

We obtain g_{12} and g_{22} using the circuit below.

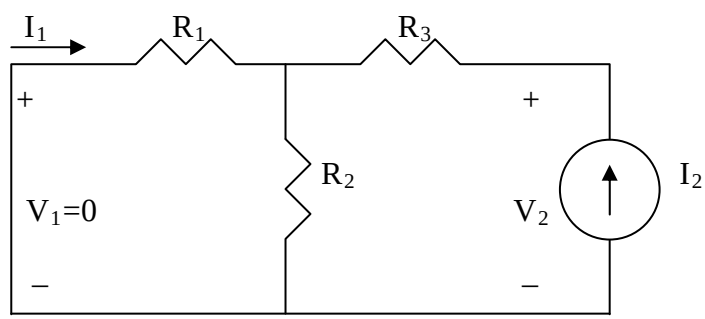

By current division,

$$I_1 = -\frac{R_2}{R_1 + R_2} I_2 \longrightarrow g_{12} = \frac{I_1}{I_2} = \underline{-\frac{R_2}{R_1 + R_2}}$$

Also,

$$V_2 = I_2(R_3 + R_1 // R_2) = I_2\left(R_3 + \frac{R_1 R_2}{R_1 + R_2}\right) \quad g_{22} = \frac{V_2}{I_2} = \underline{R_3 + \frac{R_1 R_2}{R_1 + R_2}}$$

$$\mathbf{g_{11} = \frac{1}{R_1 + R_2}, g_{12} = -\frac{R_2}{R_1 + R_2}}$$

$$\mathbf{g_{21} = \frac{R_2}{R_1 + R_2}, g_{22} = R_3 + \frac{R_1 R_2}{R_1 + R_2}}$$

www.konkur.in

Chapter 19, Solution 40.

Using Fig. 19.97, design a problem to help other students to better understand how to find *g* parameters in an ac circuit.

Although there are many ways to solve this problem, this is an example based on the same kind of problem asked in the third edition.

Problem

Find the *g* parameters for the circuit in Fig.19.97.

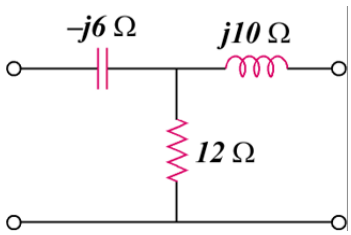

Figure 19.97

Solution

To get $\mathbf{g}_{11}$ and $\mathbf{g}_{21}$, consider the circuit in Fig. (a).

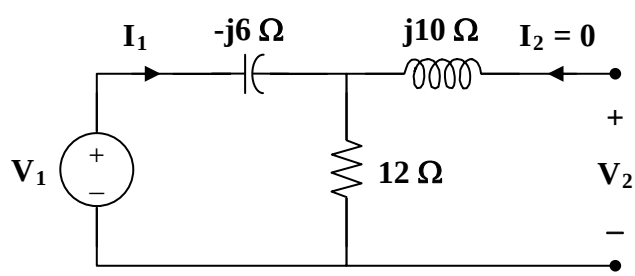

(a)

$$\mathbf{V}_1 = (12 - j6)\mathbf{I}_1 \longrightarrow \mathbf{g}_{11} = \frac{\mathbf{I}_1}{\mathbf{V}_1} = \frac{1}{12 - j6} = 0.0667 + j0.0333\ \text{S}$$

$$\mathbf{g}_{21} = \frac{\mathbf{V}_2}{\mathbf{V}_1} = \frac{12\mathbf{I}_1}{(12 - j6)\mathbf{I}_1} = \frac{2}{2 - j} = 0.8 + j0.4$$

To get $\mathbf{g}_{12}$ and $\mathbf{g}_{22}$, consider the circuit in Fig. (b).

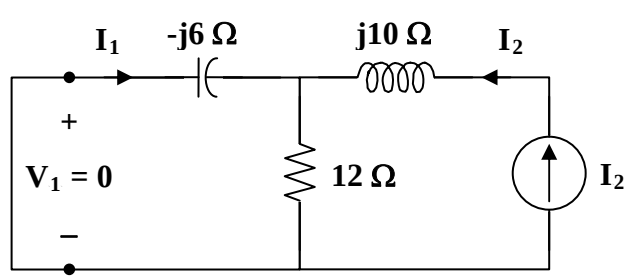

(b)

www.konkur.in

$$\mathbf{I}_1 = \frac{-12}{12 - j6}\mathbf{I}_2 \quad \longrightarrow \quad \mathbf{g}_{12} = \frac{\mathbf{I}_1}{\mathbf{I}_2} = \frac{-12}{12 - j6} = -\mathbf{g}_{21} = -0.8 - j0.4$$

$$\mathbf{V}_2 = (j10 + 12 \,||\, -j6)\mathbf{I}_2$$

$$\mathbf{g}_{22} = \frac{\mathbf{V}_2}{\mathbf{I}_2} = j10 + \frac{(12)(-j6)}{12 - j6} = 2.4 + j5.2\,\Omega$$

$$[\mathbf{g}] = \begin{bmatrix} \mathbf{0.0667 + j0.0333\ S} & \mathbf{-0.8 - j0.4} \\ \mathbf{0.8 + j0.4} & \mathbf{2.4 + j5.2\,\Omega} \end{bmatrix}$$

www.konkur.in

Chapter 19, Solution 41.

For the g parameters

$$\mathbf{I}_1 = \mathbf{g}_{11}\,\mathbf{V}_1 + \mathbf{g}_{12}\,\mathbf{I}_2 \qquad (1)$$

$$\mathbf{V}_2 = \mathbf{g}_{21}\,\mathbf{V}_1 + \mathbf{g}_{22}\,\mathbf{I}_2 \qquad (2)$$

But $\mathbf{V}_1 = \mathbf{V}_s - \mathbf{I}_1\,\mathbf{Z}_s$ and

$$\mathbf{V}_2 = -\mathbf{I}_2\,\mathbf{Z}_L = \mathbf{g}_{21}\,\mathbf{V}_1 + \mathbf{g}_{22}\,\mathbf{I}_2$$

$$0 = \mathbf{g}_{21}\,\mathbf{V}_1 + (\mathbf{g}_{22} + \mathbf{Z}_L)\,\mathbf{I}_2$$

or

$$\mathbf{V}_1 = \frac{-(\mathbf{g}_{22} + \mathbf{Z}_L)}{\mathbf{g}_{21}}\mathbf{I}_2$$

Substituting this into (1),

$$\mathbf{I}_1 = \frac{(\mathbf{g}_{22}\,\mathbf{g}_{11} + \mathbf{Z}_L\,\mathbf{g}_{11} - \mathbf{g}_{21}\,\mathbf{g}_{12})}{-\mathbf{g}_{21}}\mathbf{I}_2$$

or

$$\frac{\mathbf{I}_2}{\mathbf{I}_1} = \frac{-\mathbf{g}_{21}}{\mathbf{g}_{11}\,\mathbf{Z}_L + \Delta_g}$$

Also,

$$\mathbf{V}_2 = \mathbf{g}_{21}\,(\mathbf{V}_s - \mathbf{I}_1\,\mathbf{Z}_s) + \mathbf{g}_{22}\,\mathbf{I}_2$$

$$= \mathbf{g}_{21}\,\mathbf{V}_s - \mathbf{g}_{21}\,\mathbf{Z}_s\,\mathbf{I}_1 + \mathbf{g}_{22}\,\mathbf{I}_2$$

$$= \mathbf{g}_{21}\,\mathbf{V}_s + \mathbf{Z}_s\,(\mathbf{g}_{11}\,\mathbf{Z}_L + \Delta_g)\,\mathbf{I}_2 + \mathbf{g}_{22}\,\mathbf{I}_2$$

But

$$\mathbf{I}_2 = \frac{-\mathbf{V}_2}{\mathbf{Z}_L}$$

$$\mathbf{V}_2 = \mathbf{g}_{21}\,\mathbf{V}_s - [\,\mathbf{g}_{11}\,\mathbf{Z}_s\,\mathbf{Z}_L + \Delta_g\,\mathbf{Z}_s + \mathbf{g}_{22}\,]\left[\frac{\mathbf{V}_2}{\mathbf{Z}_L}\right]$$

$$\frac{\mathbf{V}_2\,[\,\mathbf{Z}_L + \mathbf{g}_{11}\,\mathbf{Z}_s\,\mathbf{Z}_L + \Delta_g\,\mathbf{Z}_s + \mathbf{g}_{22}\,]}{\mathbf{Z}_L} = \mathbf{g}_{21}\,\mathbf{V}_s$$

$$\frac{\mathbf{V}_2}{\mathbf{V}_s} = \frac{\mathbf{g}_{21}\,\mathbf{Z}_L}{\mathbf{Z}_L + \mathbf{g}_{11}\,\mathbf{Z}_s\,\mathbf{Z}_L + \Delta_g\,\mathbf{Z}_s + \mathbf{g}_{22}}$$

$$\frac{\mathbf{V}_2}{\mathbf{V}_s} = \frac{\mathbf{g}_{21}\,\mathbf{Z}_L}{\mathbf{Z}_L + \mathbf{g}_{11}\,\mathbf{Z}_s\,\mathbf{Z}_L + \mathbf{g}_{11}\,\mathbf{g}_{22}\,\mathbf{Z}_s - \mathbf{g}_{21}\,\mathbf{g}_{12}\,\mathbf{Z}_s + \mathbf{g}_{22}}$$

$$\frac{\mathbf{V}_2}{\mathbf{V}_s} = \frac{\mathbf{g}_{21}\,\mathbf{Z}_L}{(1 + \mathbf{g}_{11}\,\mathbf{Z}_s)(\mathbf{g}_{22} + \mathbf{Z}_L) - \mathbf{g}_{12}\,\mathbf{g}_{21}\,\mathbf{Z}_s}$$

www.konkur.in

Chapter 19, Solution 42.

With the help of Fig. 19.20, we obtain the circuit model below.

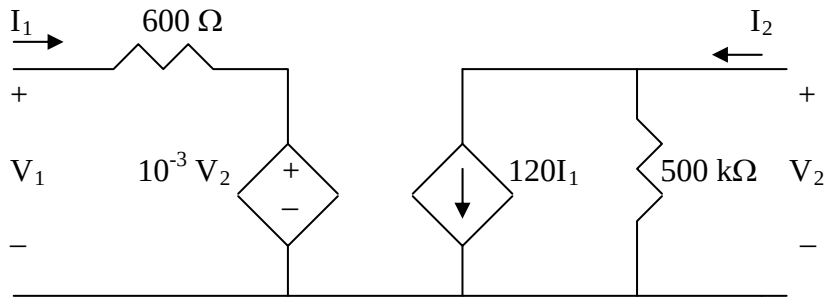

www.konkur.in

Chapter 19, Solution 43.

(a) To find $\mathbf{A}$ and $\mathbf{C}$, consider the network in Fig. (a).

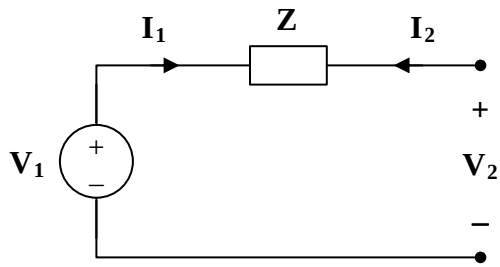

(a)

$$\mathbf{V}_1 = \mathbf{V}_2 \longrightarrow \mathbf{A} = \frac{\mathbf{V}_1}{\mathbf{V}_2} = 1$$

$$\mathbf{I}_1 = 0 \longrightarrow \mathbf{C} = \frac{\mathbf{I}_1}{\mathbf{V}_2} = 0$$

To get $\mathbf{B}$ and $\mathbf{D}$, consider the circuit in Fig. (b).

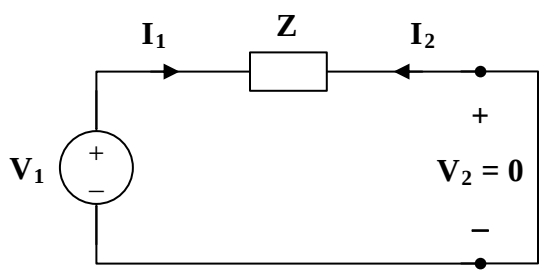

(b)

$$\mathbf{V}_1 = \mathbf{Z}\,\mathbf{I}_1, \qquad \mathbf{I}_2 = -\mathbf{I}_1$$

$$\mathbf{B} = \frac{-\mathbf{V}_1}{\mathbf{I}_2} = \frac{-\mathbf{Z}\,\mathbf{I}_1}{-\mathbf{I}_1} = \mathbf{Z}$$

$$\mathbf{D} = \frac{-\mathbf{I}_1}{\mathbf{I}_2} = 1$$

Hence,

$$[\mathbf{T}] = \begin{bmatrix} \mathbf{1} & \mathbf{Z} \\ \mathbf{0} & \mathbf{1} \end{bmatrix}$$

www.konkur.in

(b) To find $\mathbf{A}$ and $\mathbf{C}$, consider the circuit in Fig. (c).

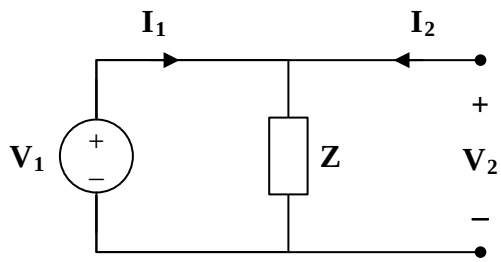

(c)

$$\mathbf{V}_1 = \mathbf{V}_2 \longrightarrow \mathbf{A} = \frac{\mathbf{V}_1}{\mathbf{V}_2} = 1$$

$$\mathbf{V}_1 = \mathbf{Z}\,\mathbf{I}_1 = \mathbf{V}_2 \longrightarrow \mathbf{C} = \frac{\mathbf{I}_1}{\mathbf{V}_2} = \frac{1}{\mathbf{Z}} = \mathbf{Y}$$

To get $\mathbf{B}$ and $\mathbf{D}$, refer to the circuit in Fig.(d).

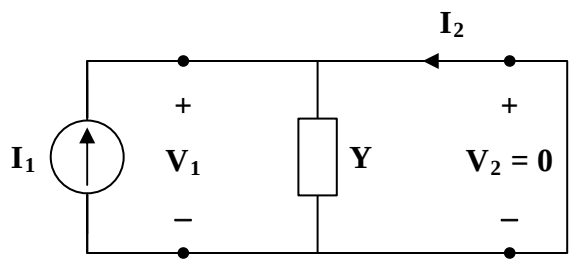

(d)

$$\mathbf{V}_1 = \mathbf{V}_2 = 0 \qquad \mathbf{I}_2 = -\mathbf{I}_1$$

$$\mathbf{B} = \frac{-\mathbf{V}_1}{\mathbf{I}_2} = 0\,, \qquad \mathbf{D} = \frac{-\mathbf{I}_1}{\mathbf{I}_2} = 1$$

Thus,

$$[\mathbf{T}] = \begin{bmatrix} \mathbf{1} & \mathbf{0} \\ \mathbf{Y} & \mathbf{1} \end{bmatrix}$$

www.konkur.in

Chapter 19, Solution 44.

Using Fig. 19.99, design a problem to help other students to better understand how to find the transmission parameters of an ac circuit.

Although there are many ways to solve this problem, this is an example based on the same kind of problem asked in the third edition.

Problem

Determine the transmission parameters of the circuit in Fig.19.99.

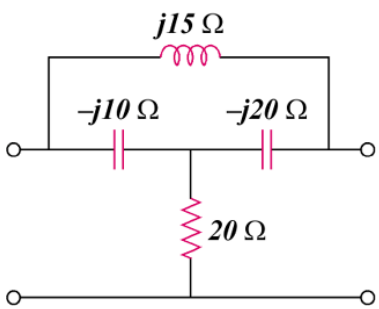

Figure 19.99

Solution

To determine **A** and **C**, consider the circuit in Fig.(a).

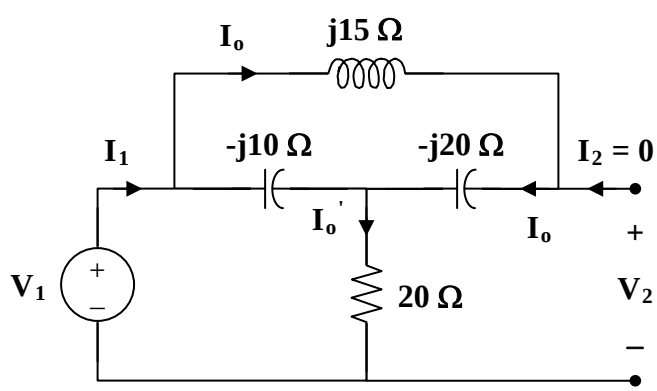

(a)

$$\mathbf{V}_1 = [\,20 + (-j10) \,||\, (j15 - j20)\,]\mathbf{I}_1$$

$$\mathbf{V}_1 = \left[20 + \frac{(-j10)(-j5)}{-j15}\right]\mathbf{I}_1 = \left[20 - j\frac{10}{3}\right]\mathbf{I}_1$$

$$\mathbf{I}_o' = \mathbf{I}_1$$

$$\mathbf{I}_o = \left(\frac{-j10}{-j10 - j5}\right)\mathbf{I}_1 = \left(\frac{2}{3}\right)\mathbf{I}_1$$

$$\mathbf{V}_2 = (-j20)\mathbf{I}_o + 20\mathbf{I}_o' = -j\frac{40}{3}I_1 + 20I_1 = \left(20 - j\frac{40}{3}\right)I_1$$

$$\mathbf{A} = \frac{\mathbf{V}_1}{\mathbf{V}_2} = \frac{(20 - j10/3)\mathbf{I}_1}{\left(20 - j\frac{40}{3}\right)I_1} = 0.7692 + j0.3461$$

$$\mathbf{C} = \frac{\mathbf{I}_1}{\mathbf{V}_2} = \frac{1}{20 - j\frac{40}{3}} = 0.03461 + j0.023$$

To find **B** and **D**, consider the circuit in Fig. (b).

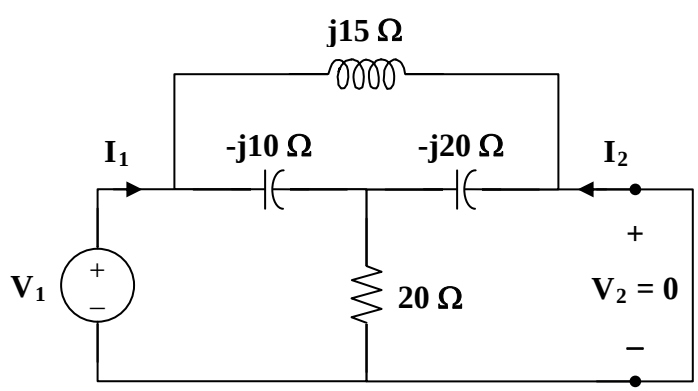

(b)

We may transform the Δ subnetwork to a T as shown in Fig. (c).

$$\mathbf{Z}_1 = \frac{(j15)(-j10)}{j15 - j10 - j20} = j10$$

$$\mathbf{Z}_2 = \frac{(-j10)(-j20)}{-j15} = -j\frac{40}{3}$$

www.konkur.in

$$\mathbf{Z}_3 = \frac{(j15)(-j20)}{-j15} = j20$$

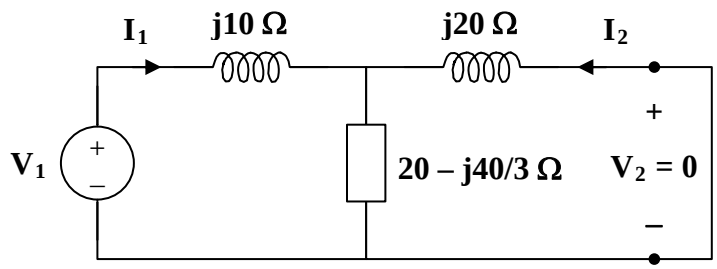

(c)

$$-\mathbf{I}_2 = \frac{20 - j40/3}{20 - j40/3 + j20}\mathbf{I}_1 = \frac{3 - j2}{3 + j}\mathbf{I}_1$$

$$\mathbf{D} = \frac{-\mathbf{I}_1}{\mathbf{I}_2} = \frac{3 + j}{3 - j2} = 0.5385 + j0.6923$$

$$\mathbf{V}_1 = \left[j10 + \frac{(j20)(20 - j40/3)}{20 - j40/3 + j20} \right]\mathbf{I}_1$$

$$\mathbf{V}_1 = [\, j10 + 2(9 + j7)\,]\mathbf{I}_1 = j\mathbf{I}_1\,(24 - j18)$$

$$\mathbf{B} = \frac{-\mathbf{V}_1}{\mathbf{I}_2} = \frac{-j\mathbf{I}_1\,(24 - j18)}{\frac{-(3-j2)}{3+j}\mathbf{I}_1} = \frac{6}{13}(-15 + j55)$$

$$\mathbf{B} = -6.923 + j25.385\,\Omega$$

$$[\mathbf{T}] = \begin{bmatrix} \mathbf{0.7692 + j0.3461} & \mathbf{(-6.923 + j25.38)\ \Omega} \\ \mathbf{(0.03461 + j0.023)\ S} & \mathbf{0.5385 + j0.6923} \end{bmatrix}$$

www.konkur.in

Chapter 19, Solution 45.

To determine A and C consider the circuit below.

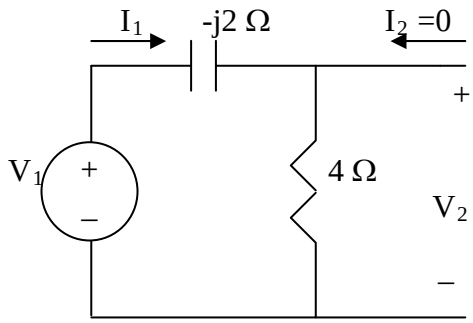

$$V_1 = (4 - j2)I_1, \qquad V_2 = 4I_1$$

$$A = \frac{V_1}{V_2} = \frac{4 - j2}{4} = 1 - j0.5$$

$$C = \frac{I_1}{V_2} = \frac{I_1}{4I_1} = 0.25$$

To determine B and D, consider the circuit below.

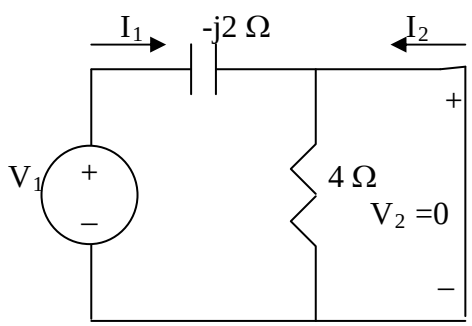

The 4-Ω resistor is short-circuited. Hence,

$$I_2 = -I_1, \qquad D = -\frac{I_1}{I_2} = 1$$

$$V_1 = -j2I_1 = j2I_2 \qquad B = -\frac{V_1}{I_2} = -\frac{j2I_2}{I_2} = -2j\Omega$$

Hence,

$$\mathbf{[T]} = \begin{bmatrix} \mathbf{1 - j0.5} & \mathbf{-j2\,\Omega} \\ \mathbf{0.25\,S} & \mathbf{1} \end{bmatrix}$$

Chapter 19, Solution 46.

To get **A** and **C**, refer to the circuit in Fig.(a).

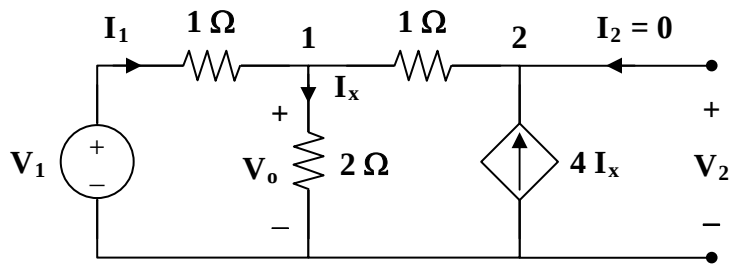

(a)

At node 1,

$$\mathbf{I}_1 = \frac{\mathbf{V}_o}{2} + \frac{\mathbf{V}_o - \mathbf{V}_2}{1} \longrightarrow 2\mathbf{I}_1 = 3\mathbf{V}_o - 2\mathbf{V}_2 \qquad (1)$$

At node 2,

$$\frac{\mathbf{V}_o - \mathbf{V}_2}{1} = 4\mathbf{I}_x = \frac{4\mathbf{V}_o}{2} = 2\mathbf{V}_o \longrightarrow \mathbf{V}_o = -\mathbf{V}_2 \qquad (2)$$

From (1) and (2),

$$2\mathbf{I}_1 = -5\mathbf{V}_2 \longrightarrow \mathbf{C} = \frac{\mathbf{I}_1}{\mathbf{V}_2} = \frac{-5}{2} = -2.5\,\text{S}$$

But $$\mathbf{I}_1 = \frac{\mathbf{V}_1 - \mathbf{V}_o}{1} = \mathbf{V}_1 + \mathbf{V}_2$$

$$-2.5\mathbf{V}_2 = \mathbf{V}_1 + \mathbf{V}_2 \longrightarrow \mathbf{V}_1 = -3.5\mathbf{V}_2$$

$$\mathbf{A} = \frac{\mathbf{V}_1}{\mathbf{V}_2} = -3.5$$

To get **B** and **D**, consider the circuit in Fig. (b).

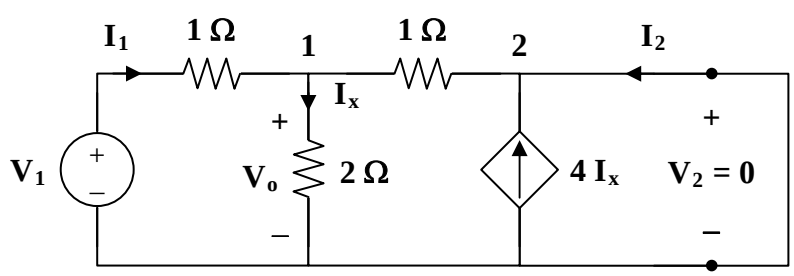

(b)

www.konkur.in

At node 1,

$$\mathbf{I}_1 = \frac{\mathbf{V}_o}{2} + \frac{\mathbf{V}_o}{1} \longrightarrow 2\mathbf{I}_1 = 3\mathbf{V}_o \qquad (3)$$

At node 2,

$$\mathbf{I}_2 + \frac{\mathbf{V}_o}{1} + 4\mathbf{I}_x = 0$$

$$-\mathbf{I}_2 = \mathbf{V}_o + 2\mathbf{V}_o = 0 \longrightarrow \mathbf{I}_2 = -3\mathbf{V}_o \qquad (4)$$

Adding (3) and (4),

$$2\mathbf{I}_1 + \mathbf{I}_2 = 0 \longrightarrow \mathbf{I}_1 = -0.5\mathbf{I}_2 \qquad (5)$$

$$\mathbf{D} = \frac{-\mathbf{I}_1}{\mathbf{I}_2} = 0.5$$

But $$\mathbf{I}_1 = \frac{\mathbf{V}_1 - \mathbf{V}_o}{1} \longrightarrow \mathbf{V}_1 = \mathbf{I}_1 + \mathbf{V}_o \qquad (6)$$

Substituting (5) and (4) into (6),

$$\mathbf{V}_1 = \frac{-1}{2}\mathbf{I}_2 + \frac{-1}{3}\mathbf{I}_2 = \frac{-5}{6}\mathbf{I}_2$$

$$\mathbf{B} = \frac{-\mathbf{V}_1}{\mathbf{I}_2} = \frac{5}{6} = 0.8333\,\Omega$$

Thus,

$$[\mathbf{T}] = \begin{bmatrix} \mathbf{-3.5} & \mathbf{0.8333\,\Omega} \\ \mathbf{-2.5\ S} & \mathbf{-0.5} \end{bmatrix}$$

www.konkur.in

Chapter 19, Solution 47.

To get A and C, consider the circuit below.

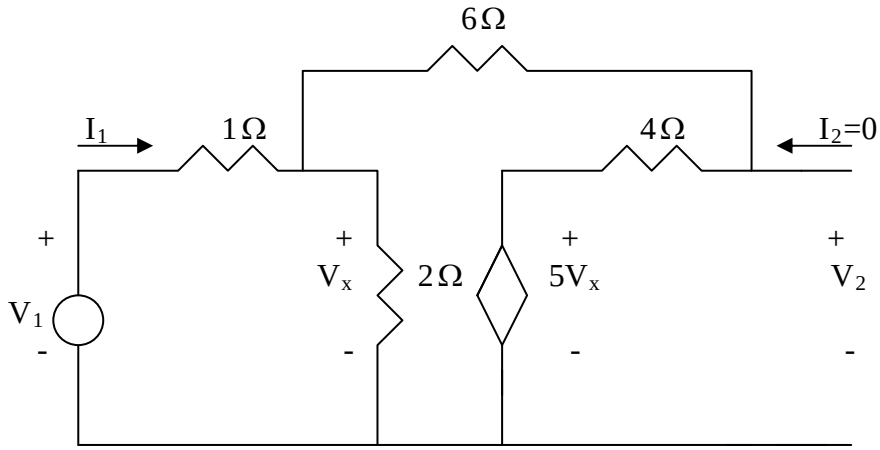

$$\frac{V_1 - V_x}{1} = \frac{V_x}{2} + \frac{V_x - 5V_x}{10} \longrightarrow V_1 = 1.1V_x$$

$$V_2 = 4(-0.4V_x) + 5V_x = 3.4V_x \longrightarrow A = \frac{V_1}{V_2} = 1.1/3.4 = 0.3235$$

$$I_1 = \frac{V_1 - V_x}{1} = 1.1V_x - V_x = 0.1V_x \longrightarrow C = \frac{I_1}{V_2} = 0.1/3.4 = 0.02941$$

To get B and D, consider the circuit below.

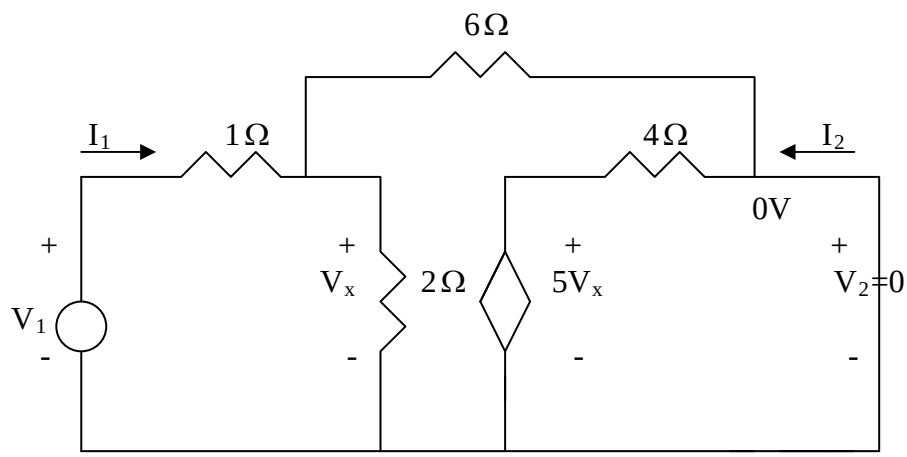

$$\frac{V_1 - V_x}{1} = \frac{V_x}{6} + \frac{V_x}{2} \longrightarrow V_1 = \frac{10}{6}V_x \qquad (1)$$

$$I_2 = -\frac{5V_x}{4} - \frac{V_x}{6} = -\frac{17}{12}V_x \qquad (2)$$

$$V_1 = I_1 + V_x \qquad (3)$$

From (1) and (3)

$$I_1 = V_1 - V_x = \frac{4}{6}V_x \longrightarrow D = -\frac{I_1}{I_2} = \frac{4}{6}(\frac{12}{17}) = 0.4706$$

$$B = -\frac{V_1}{I_2} = \frac{10}{6}(\frac{12}{17}) = 1.176$$

S

Ω

$$[T] = \begin{bmatrix} 0.3235 & 1.176\Omega \\ 0.02941\,S & 0.4706 \end{bmatrix}$$

www.konkur.in

Chapter 19, Solution 48.

(a) Refer to the circuit below.

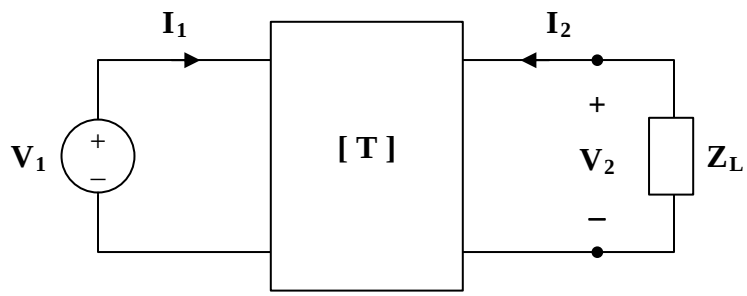

$$\mathbf{V}_1 = 4\mathbf{V}_2 - 30\mathbf{I}_2 \qquad (1)$$
$$\mathbf{I}_1 = 0.1\mathbf{V}_2 - \mathbf{I}_2 \qquad (2)$$

When the output terminals are shorted, $\mathbf{V}_2 = 0$.
So, (1) and (2) become

$$\mathbf{V}_1 = -30\mathbf{I}_2 \qquad \text{and} \qquad \mathbf{I}_1 = -\mathbf{I}_2$$

Hence,

$$\mathbf{Z}_{in} = \frac{\mathbf{V}_1}{\mathbf{I}_1} = \mathbf{30\,\Omega}$$

(b) When the output terminals are open-circuited, $\mathbf{I}_2 = 0$.
So, (1) and (2) become

$$\mathbf{V}_1 = 4\mathbf{V}_2$$
$$\mathbf{I}_1 = 0.1\mathbf{V}_2 \qquad \text{or} \qquad \mathbf{V}_2 = 10\mathbf{I}_1$$

$$\mathbf{V}_1 = 40\mathbf{I}_1$$

$$\mathbf{Z}_{in} = \frac{\mathbf{V}_1}{\mathbf{I}_1} = \mathbf{40\,\Omega}$$

(c) When the output port is terminated by a 10-Ω load, $V_2 = -10I_2$.
So, (1) and (2) become

$$\mathbf{V}_1 = -40\mathbf{I}_2 - 30\mathbf{I}_2 = -70\mathbf{I}_2$$
$$\mathbf{I}_1 = -\mathbf{I}_2 - \mathbf{I}_2 = -2\mathbf{I}_2$$

$$\mathbf{V}_1 = 35\mathbf{I}_1$$

www.konkur.in

$$\mathbf{Z}_{in} = \frac{\mathbf{V}_1}{\mathbf{I}_1} = \mathbf{35\,\Omega}$$

Alternatively, we may use $\mathbf{Z}_{in} = \dfrac{\mathbf{A\,Z}_L + \mathbf{B}}{\mathbf{C\,Z}_L + \mathbf{D}}$

www.konkur.in

Chapter 19, Solution 49.

To get $\mathbf{A}$ and $\mathbf{C}$, refer to the circuit in Fig.(a).

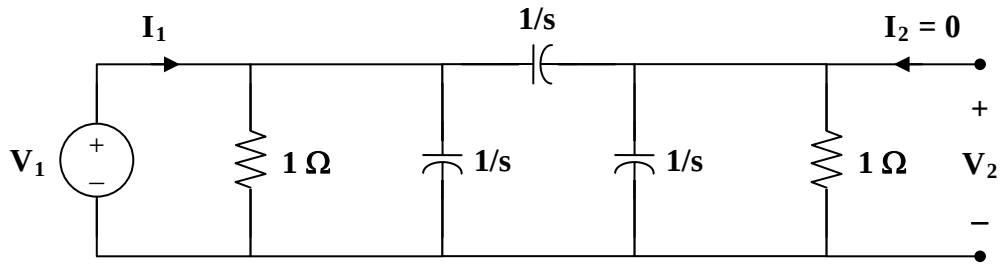

(a)

$$1 \| \frac{1}{s} = \frac{1/s}{1+1/s} = \frac{1}{s+1}$$

$$\mathbf{V}_2 = \frac{1 \| 1/s}{1/s + 1 \| 1/s}\mathbf{V}_1$$

$$\mathbf{A} = \frac{\mathbf{V}_2}{\mathbf{V}_1} = \frac{\frac{1}{s+1}}{\frac{1}{s} + \frac{1}{s+1}} = \frac{s}{2s+1}$$

$$\mathbf{V}_1 = \mathbf{I}_1\left(\frac{1}{s+1}\right) \| \left(\frac{1}{s} + \frac{1}{s+1}\right) = \mathbf{I}_1\left(\frac{1}{s+1}\right) \| \left(\frac{2s+1}{s(s+1)}\right)$$

$$\frac{\mathbf{V}_1}{\mathbf{I}_1} = \frac{\left(\frac{1}{s+1}\right)\cdot\left(\frac{2s+1}{s(s+1)}\right)}{\frac{1}{s+1} + \frac{2s+1}{s(s+1)}} = \frac{2s+1}{(s+1)(3s+1)}$$

But $\quad \mathbf{V}_1 = \mathbf{V}_2 \cdot \frac{2s+1}{s}$

Hence, $\quad \frac{\mathbf{V}_2}{\mathbf{I}_1} \cdot \frac{2s+1}{s} = \frac{2s+1}{(s+1)(3s+1)}$

$$\mathbf{C} = \frac{\mathbf{V}_2}{\mathbf{I}_1} = \frac{(s+1)(3s+1)}{s}$$

www.konkur.in

To get **B** and **D**, consider the circuit in Fig. (b).

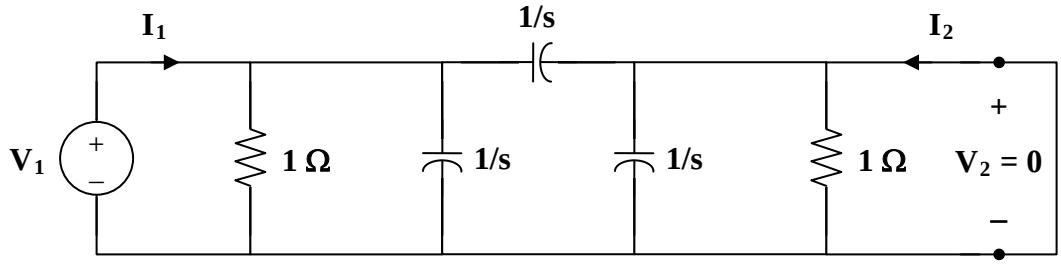

(b)

$$\mathbf{V}_1 = \mathbf{I}_1\left(1 \parallel \frac{1}{s} \parallel \frac{1}{s}\right) = \mathbf{I}_1\left(1 \parallel \frac{1}{2s}\right) = \frac{\mathbf{I}_1}{2s+1}$$

$$\mathbf{I}_2 = \frac{\dfrac{-1}{s+1}\mathbf{I}_1}{\dfrac{1}{s+1}+\dfrac{1}{s}} = \frac{-s}{2s+1}\mathbf{I}_1$$

$$\mathbf{D} = \frac{-\mathbf{I}_1}{\mathbf{I}_2} = \frac{2s+1}{s} = 2+\frac{1}{s}$$

$$\mathbf{V}_1 = \left(\frac{1}{2s+1}\right)\left(\frac{2s+1}{-s}\right)\mathbf{I}_2 = \frac{\mathbf{I}_2}{-s} \longrightarrow \mathbf{B} = \frac{-\mathbf{V}_1}{\mathbf{I}_2} = \frac{1}{s}$$

Thus,

$$[\mathbf{T}] = \begin{bmatrix} \dfrac{2}{2s+1} & \dfrac{1}{s} \\ \dfrac{(s+1)(3s+1)}{s} & 2+\dfrac{1}{s} \end{bmatrix}$$

www.konkur.in

Chapter 19, Solution 50.

To get a and c, consider the circuit below.

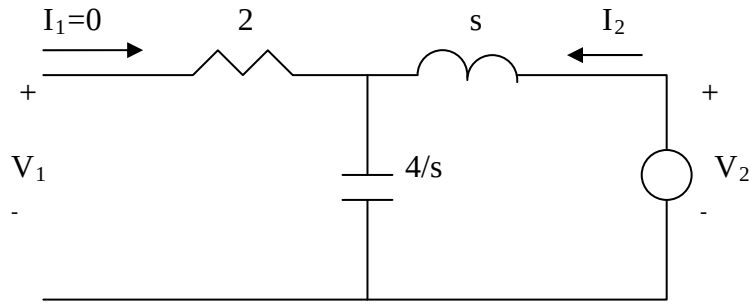

$$V_1 = \frac{4/s}{s+4/s}V_2 = \frac{4}{s^2+4}V_2 \quad \longrightarrow \quad a = V_2/V_1 = 1+0.25s^2$$

$$V_2 = (s+4/s)I_2 \text{ or}$$

$$I_2 = \frac{V_2}{s+4/s} = \frac{(1+0.25s^2)V_1}{s+4/s} \quad \longrightarrow \quad c = \frac{I_2}{V_1} = \frac{s+0.25s^3}{s^2+4}$$

To get b and d, consider the circuit below.

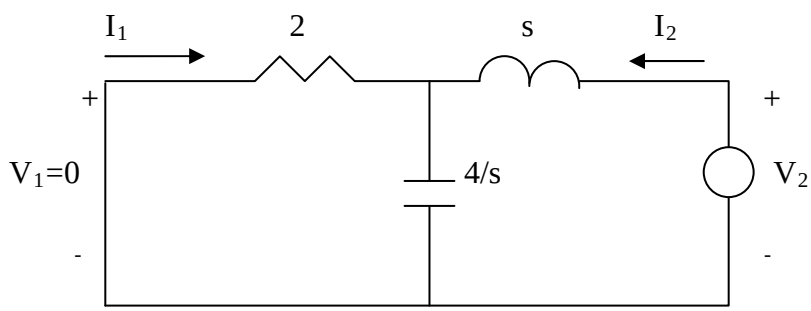

$$I_1 = \frac{-4/s}{2+4/s}I_2 = -\frac{2I_2}{s+2} \quad \longrightarrow \quad d = -\frac{I_2}{I_1} = 1+0.5s$$

$$V_2 = (s+2//\frac{4}{s})I_2 = \frac{(s^2+2s+4)}{s+2}I_2$$

$$= -\frac{(s^2+2s+4)}{s+2}\frac{(s+2)}{2}I_1 \quad \longrightarrow \quad b = -\frac{V_2}{I_1} = 0.5s^2+s+2$$

www.konkur.in

$$[t] = \begin{bmatrix} 0.25s^2 + 1 & 0.5s^2 + s + 2 \\ \dfrac{0.25s^2 + s}{s^2 + 4} & 0.5s + 1 \end{bmatrix}$$

www.konkur.in

Chapter 19, Solution 51.

To get **a** and **c**, consider the circuit in Fig. (a).

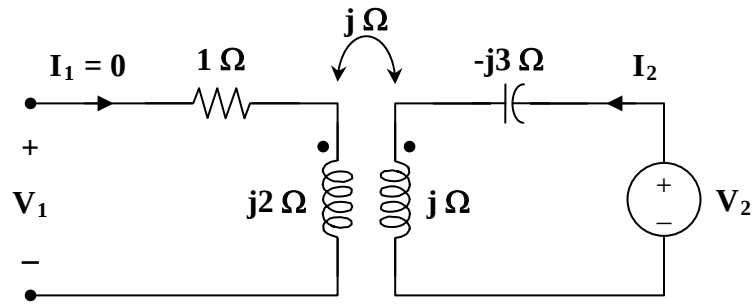

(a)

$$\mathbf{V}_2 = \mathbf{I}_2\,(\mathrm{j} - \mathrm{j}3) = -\mathrm{j}2\,\mathbf{I}_2$$

$$\mathbf{V}_1 = -\mathrm{j}\mathbf{I}_2$$

$$\mathbf{a} = \frac{\mathbf{V}_2}{\mathbf{V}_1} = \frac{-\,\mathrm{j}2\,\mathbf{I}_2}{-\,\mathrm{j}\mathbf{I}_2} = 2$$

$$\mathbf{c} = \frac{\mathbf{I}_2}{\mathbf{V}_1} = \frac{1}{-\,\mathrm{j}} = \mathrm{j}$$

To get **b** and **d**, consider the circuit in Fig. (b).

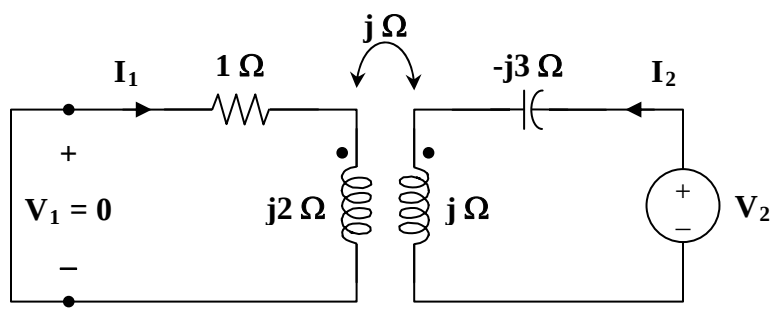

(b)

For mesh 1,

$$0 = (1 + \mathrm{j}2)\,\mathbf{I}_1 - \mathrm{j}\,\mathbf{I}_2$$

or

$$\frac{\mathbf{I}_2}{\mathbf{I}_1} = \frac{1 + \mathrm{j}2}{\mathrm{j}} = 2 - \mathrm{j}$$

$$\mathbf{d} = \frac{-\,\mathbf{I}_2}{\mathbf{I}_1} = -2 + \mathrm{j}$$

www.konkur.in

For mesh 2,

$$\mathbf{V}_2 = \mathbf{I}_2\,(\mathrm{j} - \mathrm{j}3) - \mathrm{j}\,\mathbf{I}_1$$
$$\mathbf{V}_2 = \mathbf{I}_1\,(2 - \mathrm{j})(-\mathrm{j}2) - \mathrm{j}\,\mathbf{I}_1 = (-2 - \mathrm{j}5)\,\mathbf{I}_1$$

$$\mathbf{b} = \frac{-\mathbf{V}_2}{\mathbf{I}_1} = 2 + \mathrm{j}5$$

Thus,

$$[\mathbf{t}] = \begin{bmatrix} \mathbf{2} & \mathbf{2 + j5} \\ \mathbf{j} & \mathbf{-2 + j} \end{bmatrix}$$

www.konkur.in

Chapter 19, Solution 52.

It is easy to find the z parameters and then transform these to h parameters and T parameters.

$$[\mathbf{z}] = \begin{bmatrix} R_1 + R_2 & R_2 \\ R_2 & R_2 + R_3 \end{bmatrix}$$

$$\begin{aligned} \Delta_z &= (R_1 + R_2)(R_2 + R_3) - R_2^2 \\ &= R_1R_2 + R_2R_3 + R_3R_1 \end{aligned}$$

(a) $$[\mathbf{h}] = \begin{bmatrix} \dfrac{\Delta_z}{\mathbf{z}_{22}} & \dfrac{\mathbf{z}_{12}}{\mathbf{z}_{22}} \\ \dfrac{-\mathbf{z}_{21}}{\mathbf{z}_{22}} & \dfrac{1}{\mathbf{z}_{22}} \end{bmatrix} = \begin{bmatrix} \dfrac{R_1R_2 + R_2R_3 + R_3R_1}{R_2 + R_3} & \dfrac{R_2}{R_2 + R_3} \\ \dfrac{-R_2}{R_2 + R_3} & \dfrac{1}{R_2 + R_3} \end{bmatrix}$$

Thus,

$$\mathbf{h_{11} = R_1 + \frac{R_2R_3}{R_2 + R_3}}, \quad \mathbf{h_{12} = \frac{R_2}{R_2 + R_3} = -h_{21}}, \quad \mathbf{h_{22} = \frac{1}{R_2 + R_3}}$$

as required.

(b) $$[\mathbf{T}] = \begin{bmatrix} \dfrac{\mathbf{z}_{11}}{\mathbf{z}_{21}} & \dfrac{\Delta_z}{\mathbf{z}_{21}} \\ \dfrac{1}{\mathbf{z}_{21}} & \dfrac{\mathbf{z}_{22}}{\mathbf{z}_{21}} \end{bmatrix} = \begin{bmatrix} \dfrac{R_1 + R_2}{R_2} & \dfrac{R_1R_2 + R_2R_3 + R_3R_1}{R_2} \\ \dfrac{1}{R_2} & \dfrac{R_2 + R_3}{R_2} \end{bmatrix}$$

Hence,

$$\mathbf{A = 1 + \frac{R_1}{R_2}}, \quad \mathbf{B = R_3 + \frac{R_1}{R_2}(R_2 + R_3)}, \quad \mathbf{C = \frac{1}{R_2}}, \quad \mathbf{D = 1 + \frac{R_3}{R_2}}$$

as required.

www.konkur.in

Chapter 19, Solution 53.

For the z parameters,

$$\mathbf{V}_1 = \mathbf{z}_{11}\mathbf{I}_1 + \mathbf{z}_{12}\mathbf{I}_2 \qquad (1)$$

$$\mathbf{V}_2 = \mathbf{z}_{12}\mathbf{I}_1 + \mathbf{z}_{22}\mathbf{I}_2 \qquad (2)$$

For **ABCD** parameters,

$$\mathbf{V}_1 = \mathbf{A}\,\mathbf{V}_2 - \mathbf{B}\,\mathbf{I}_2 \qquad (3)$$

$$\mathbf{I}_1 = \mathbf{C}\,\mathbf{V}_2 - \mathbf{D}\,\mathbf{I}_2 \qquad (4)$$

From (4),

$$\mathbf{V}_2 = \frac{\mathbf{I}_1}{\mathbf{C}} + \frac{\mathbf{D}}{\mathbf{C}}\mathbf{I}_2 \qquad (5)$$

Comparing (2) and (5),

$$\mathbf{z}_{21} = \frac{1}{\mathbf{C}}, \qquad \mathbf{z}_{22} = \frac{\mathbf{D}}{\mathbf{C}}$$

Substituting (5) into (3),

$$\mathbf{V}_1 = \frac{\mathbf{A}}{\mathbf{C}}\mathbf{I}_1 + \left(\frac{\mathbf{AD}}{\mathbf{C}} - \mathbf{B}\right)\mathbf{I}_2$$

$$= \frac{\mathbf{A}}{\mathbf{C}}\mathbf{I}_1 + \frac{\mathbf{AD} - \mathbf{BC}}{\mathbf{C}}\mathbf{I}_2 \qquad (6)$$

Comparing (6) and (1),

$$\mathbf{z}_{11} = \frac{\mathbf{A}}{\mathbf{C}} \qquad \mathbf{z}_{12} = \frac{\mathbf{AD} - \mathbf{BC}}{\mathbf{C}} = \frac{\Delta_T}{\mathbf{C}}$$

Thus,

$$[Z] = \begin{bmatrix} \frac{\mathbf{A}}{\mathbf{C}} & \frac{\Delta_T}{\mathbf{C}} \\ \frac{\mathbf{1}}{\mathbf{C}} & \frac{\mathbf{D}}{\mathbf{C}} \end{bmatrix}$$

www.konkur.in

Chapter 19, Solution 54.

For the y parameters

$$\mathbf{I}_1 = \mathbf{y}_{11}\,\mathbf{V}_1 + \mathbf{y}_{12}\,\mathbf{V}_2 \qquad (1)$$

$$\mathbf{I}_2 = \mathbf{y}_{21}\,\mathbf{V}_1 + \mathbf{y}_{22}\,\mathbf{V}_2 \qquad (2)$$

From (2),

$$\mathbf{V}_1 = \frac{\mathbf{I}_2}{\mathbf{y}_{21}} - \frac{\mathbf{y}_{22}}{\mathbf{y}_{21}}\mathbf{V}_2$$

or

$$\mathbf{V}_1 = \frac{-\mathbf{y}_{22}}{\mathbf{y}_{12}}\mathbf{V}_2 + \frac{1}{\mathbf{y}_{21}}\mathbf{I}_2 \qquad (3)$$

Substituting (3) into (1) gives

$$\mathbf{I}_1 = \frac{-\mathbf{y}_{11}\,\mathbf{y}_{22}}{\mathbf{y}_{21}}\mathbf{V}_2 + \mathbf{y}_{12}\,\mathbf{V}_2 + \frac{\mathbf{y}_{11}}{\mathbf{y}_{21}}\mathbf{I}_2$$

or

$$\mathbf{I}_1 = \frac{-\Delta_y}{\mathbf{y}_{21}}\mathbf{V}_2 + \frac{\mathbf{y}_{11}}{\mathbf{y}_{21}}\mathbf{I}_2 \qquad (4)$$

Comparing (3) and (4) with the following equations

$$\mathbf{V}_1 = \mathbf{A}\,\mathbf{V}_2 - \mathbf{B}\,\mathbf{I}_2$$

$$\mathbf{I}_1 = \mathbf{C}\,\mathbf{V}_2 - \mathbf{D}\,\mathbf{I}_2$$

clearly shows that

$$\mathbf{A} = \frac{-\mathbf{y}_{22}}{\mathbf{y}_{21}}, \quad \mathbf{B} = \frac{-1}{\mathbf{y}_{21}}, \quad \mathbf{C} = \frac{-\Delta_y}{\mathbf{y}_{21}}, \quad \mathbf{D} = \frac{-\mathbf{y}_{11}}{\mathbf{y}_{21}}$$

as required.

www.konkur.in

Chapter 19, Solution 55.

For the z parameters

$$\mathbf{V}_1 = \mathbf{z}_{11}\,\mathbf{I}_1 + \mathbf{z}_{12}\,\mathbf{I}_2 \qquad (1)$$

$$\mathbf{V}_2 = \mathbf{z}_{21}\,\mathbf{I}_1 + \mathbf{z}_{22}\,\mathbf{I}_2 \qquad (2)$$

From (1),

$$\mathbf{I}_1 = \frac{1}{\mathbf{z}_{11}}\mathbf{V}_1 - \frac{\mathbf{z}_{12}}{\mathbf{z}_{11}}\mathbf{I}_2 \qquad (3)$$

Substituting (3) into (2) gives

$$\mathbf{V}_2 = \frac{\mathbf{z}_{21}}{\mathbf{z}_{11}}\mathbf{V}_1 + \left(\mathbf{z}_{22} - \frac{\mathbf{z}_{21}\,\mathbf{z}_{12}}{\mathbf{z}_{11}}\right)\mathbf{I}_2$$

or

$$\mathbf{V}_2 = \frac{\mathbf{z}_{21}}{\mathbf{z}_{11}}\mathbf{V}_1 + \frac{\Delta_z}{\mathbf{z}_{11}}\mathbf{I}_2 \qquad (4)$$

Comparing (3) and (4) with the following equations

$$\mathbf{I}_1 = \mathbf{g}_{11}\,\mathbf{V}_1 + \mathbf{g}_{12}\,\mathbf{I}_2$$

$$\mathbf{V}_2 = \mathbf{g}_{21}\,\mathbf{V}_1 + \mathbf{g}_{22}\,\mathbf{I}_2$$

indicates that

$$\mathbf{g}_{11} = \frac{1}{\mathbf{z}_{11}}, \quad \mathbf{g}_{12} = \frac{-\mathbf{z}_{12}}{\mathbf{z}_{11}}, \quad \mathbf{g}_{21} = \frac{\mathbf{z}_{21}}{\mathbf{z}_{11}}, \quad \mathbf{g}_{22} = \frac{\Delta_z}{\mathbf{z}_{11}}$$

as required.

www.konkur.in

Chapter 19, Solution 56.

Using Fig. 19.20, we obtain the equivalent circuit as shown below.

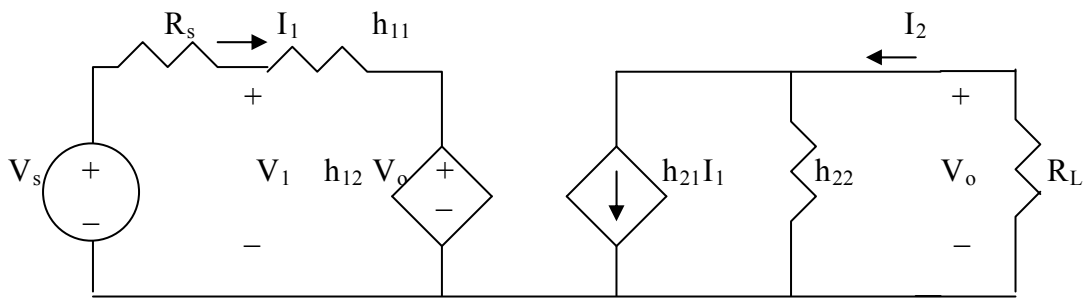

We can solve this using MATLAB. First, we generate 4 equations from the given circuit. It may help to let $V_s = 10$ V.

$-10 + R_sI_1 + V_1 = 0$ or $V_1 + 1000I_1 = 10$
$-10 + R_sI_1 + h_{11}I_1 + h_{12}V_o = 0$ or $0.0001V_s + 1500 = 10$
$I_2 = -V_o/R_L$ or $V_o + 2000I_2 = 0$
$h_{21}I_1 + h_{22}V_o - I_2 = 0$ or $2\text{x}10^{-6}V_o + 100I_1 - I_2 = 0$

```
>> A=[1,0,1000,0;0,0.0001,1500,0;0,1,0,2000;0,(2*10^-6),100,-1]
A =
  1.0e+003 *
   0.0010         0    1.0000         0
        0    0.0000    1.5000         0
        0    0.0010         0    2.0000
        0    0.0000    0.1000   -0.0010
>> U=[10;10;0;0]
U =
    10
    10
     0
     0
>> X=inv(A)*U
X =
  1.0e+003 *
   0.0032
  -1.3459
   0.0000
   0.0007
```

Gain = $V_o / V_s = -1{,}345.9/10 =$ **–134.59**.

There is a second approach we can take to check this problem. First, the resistive value of h_{22} is quite large, 500 kΩ versus R_L so can be ignored. Working on the right side of the circuit we obtain the following,

www.konkur.in

$I_2 = 100I_1$ which leads to $V_o = -I_2 x 2k = -2x10^5 I_1$.

Now the left hand loop equation becomes,

$$-V_s + (1000 + 500 + 10^{-4}(-2x10^5))I_1 = 1480I_1.$$

Solving for V_o/V_s we get,

$$V_o/V_s = -200{,}000/1480 = \mathbf{-134.14}.$$

Our answer checks!

www.konkur.in

Chapter 19, Solution 57.

$\Delta_T = (3)(7) - (20)(1) = 1$

$$[\mathbf{z}] = \begin{bmatrix} \frac{\mathbf{A}}{\mathbf{C}} & \frac{\Delta_T}{\mathbf{C}} \\ \frac{1}{\mathbf{C}} & \frac{\mathbf{D}}{\mathbf{C}} \end{bmatrix} = \begin{bmatrix} \mathbf{3} & \mathbf{1} \\ \mathbf{1} & \mathbf{7} \end{bmatrix} \mathbf{\Omega}$$

$$[\mathbf{y}] = \begin{bmatrix} \frac{\mathbf{D}}{\mathbf{B}} & \frac{-\Delta_T}{\mathbf{B}} \\ \frac{-1}{\mathbf{B}} & \frac{\mathbf{A}}{\mathbf{B}} \end{bmatrix} = \begin{bmatrix} \frac{\mathbf{7}}{\mathbf{20}} & \frac{\mathbf{-1}}{\mathbf{20}} \\ \frac{\mathbf{-1}}{\mathbf{20}} & \frac{\mathbf{3}}{\mathbf{20}} \end{bmatrix} \mathbf{S}$$

$$[\mathbf{h}] = \begin{bmatrix} \frac{\mathbf{B}}{\mathbf{D}} & \frac{\Delta_T}{\mathbf{D}} \\ \frac{-1}{\mathbf{D}} & \frac{\mathbf{C}}{\mathbf{D}} \end{bmatrix} = \begin{bmatrix} \frac{\mathbf{20}}{\mathbf{7}}\mathbf{\Omega} & \frac{\mathbf{1}}{\mathbf{7}} \\ \frac{\mathbf{-1}}{\mathbf{7}} & \frac{\mathbf{1}}{\mathbf{7}}\mathbf{S} \end{bmatrix}$$

$$[\mathbf{g}] = \begin{bmatrix} \frac{\mathbf{C}}{\mathbf{A}} & \frac{-\Delta_T}{\mathbf{A}} \\ \frac{1}{\mathbf{A}} & \frac{\mathbf{B}}{\mathbf{A}} \end{bmatrix} = \begin{bmatrix} \frac{\mathbf{1}}{\mathbf{3}}\mathbf{S} & \frac{\mathbf{-1}}{\mathbf{3}} \\ \frac{\mathbf{1}}{\mathbf{3}} & \frac{\mathbf{20}}{\mathbf{3}}\mathbf{\Omega} \end{bmatrix}$$

$$[\mathbf{t}] = \begin{bmatrix} \frac{\mathbf{D}}{\Delta_T} & \frac{\mathbf{B}}{\Delta_T} \\ \frac{\mathbf{C}}{\Delta_T} & \frac{\mathbf{A}}{\Delta_T} \end{bmatrix} = \begin{bmatrix} \mathbf{7} & \mathbf{20\,\Omega} \\ \mathbf{1\,S} & \mathbf{3} \end{bmatrix}$$

www.konkur.in

Chapter 19, Solution 58.

Design a problem to help other students to better understand how to develop the y parameters and transmission parameters, given equations in terms of the hybrid parameters.

Although there are many ways to solve this problem, this is an example based on the same kind of problem asked in the third edition.

Problem

A two-port is described by

$$\mathbf{V}_1 = \mathbf{I}_1 + 2\mathbf{V}_2, \quad \mathbf{I}_2 = -2\mathbf{I}_1 + 0.4\mathbf{V}_2$$

Find: (a) the *y* parameters, (b) the transmission parameters.

Solution

The given set of equations is for the h parameters.

$$[\mathbf{h}] = \begin{bmatrix} 1\,\Omega & 2 \\ -2 & 0.4\,\text{S} \end{bmatrix} \qquad \Delta_h = (1)(0.4) - (2)(-2) = 4.4$$

(a) $$[\mathbf{y}] = \begin{bmatrix} \dfrac{1}{\mathbf{h}_{11}} & \dfrac{-\mathbf{h}_{12}}{\mathbf{h}_{11}} \\ \dfrac{\mathbf{h}_{21}}{\mathbf{h}_{11}} & \dfrac{\Delta_h}{\mathbf{h}_{11}} \end{bmatrix} = \begin{bmatrix} \mathbf{1} & \mathbf{-2} \\ \mathbf{-2} & \mathbf{4.4} \end{bmatrix}\mathbf{S}$$

(b) $$[\mathbf{T}] = \begin{bmatrix} \dfrac{-\Delta_h}{\mathbf{h}_{21}} & \dfrac{-\mathbf{h}_{11}}{\mathbf{h}_{21}} \\ \dfrac{-\mathbf{h}_{22}}{\mathbf{h}_{21}} & \dfrac{-1}{\mathbf{h}_{21}} \end{bmatrix} = \begin{bmatrix} \mathbf{2.2} & \mathbf{0.5\,\Omega} \\ \mathbf{0.2\,S} & \mathbf{0.5} \end{bmatrix}$$

www.konkur.in

Chapter 19, Solution 59.

$$\Delta_g = (0.06)(2) - (-0.4)(0.2) = 0.12 + 0.08 = 0.2$$

(a) $$[\mathbf{z}] = \begin{bmatrix} \dfrac{1}{\mathbf{g}_{11}} & \dfrac{-\mathbf{g}_{12}}{\mathbf{g}_{11}} \\ \dfrac{\mathbf{g}_{21}}{\mathbf{g}_{11}} & \dfrac{\Delta_g}{\mathbf{g}_{11}} \end{bmatrix} = \begin{bmatrix} \mathbf{16.667} & \mathbf{6.667} \\ \mathbf{3.333} & \mathbf{3.333} \end{bmatrix} \mathbf{\Omega}$$

(b) $$[\mathbf{y}] = \begin{bmatrix} \dfrac{\Delta_g}{\mathbf{g}_{22}} & \dfrac{\mathbf{g}_{12}}{\mathbf{g}_{22}} \\ \dfrac{-\mathbf{g}_{21}}{\mathbf{g}_{22}} & \dfrac{1}{\mathbf{g}_{22}} \end{bmatrix} = \begin{bmatrix} \mathbf{0.1} & \mathbf{-0.2} \\ \mathbf{-0.1} & \mathbf{0.5} \end{bmatrix} \mathbf{S}$$

(c) $$[\mathbf{h}] = \begin{bmatrix} \dfrac{\mathbf{g}_{22}}{\Delta_g} & \dfrac{-\mathbf{g}_{12}}{\Delta_g} \\ \dfrac{-\mathbf{g}_{21}}{\Delta_g} & \dfrac{\mathbf{g}_{11}}{\Delta_g} \end{bmatrix} = \begin{bmatrix} \mathbf{10\,\Omega} & \mathbf{2} \\ \mathbf{-1} & \mathbf{0.3\ S} \end{bmatrix}$$

(d) $$[\mathbf{T}] = \begin{bmatrix} \dfrac{1}{\mathbf{g}_{21}} & \dfrac{\mathbf{g}_{22}}{\mathbf{g}_{21}} \\ \dfrac{\mathbf{g}_{11}}{\mathbf{g}_{21}} & \dfrac{\Delta_g}{\mathbf{g}_{21}} \end{bmatrix} = \begin{bmatrix} \mathbf{5} & \mathbf{10\,\Omega} \\ \mathbf{0.3\ S} & \mathbf{1} \end{bmatrix}$$

www.konkur.in

Chapter 19, Solution 60.

Comparing this with Fig. 19.5,

$$z_{11} - z_{12} = 4 + j3 - 2 = 2 + j3k\Omega$$

$z_{22} - z_{12} = 5 - j - 2 = 3 - j\ k\Omega$

$$X_L = 3x10^3 = \omega L \quad \longrightarrow \quad L = \frac{3x10^3}{10^6} = 3mH$$

$X_C = 1x10^3 = 1/(\omega C)$ or $C = 1/(10^3 x10^6) = 1$ nF

Hence, the resulting T network is shown below.

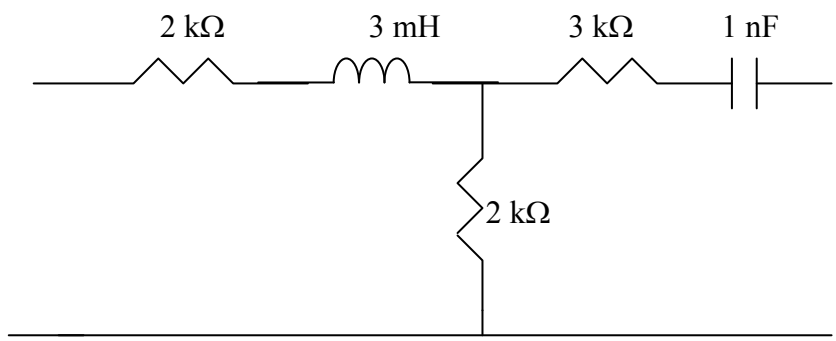

Chapter 19, Solution 61.

(a) To obtain $\mathbf{z}_{11}$ and $\mathbf{z}_{21}$, consider the circuit in Fig. (a).

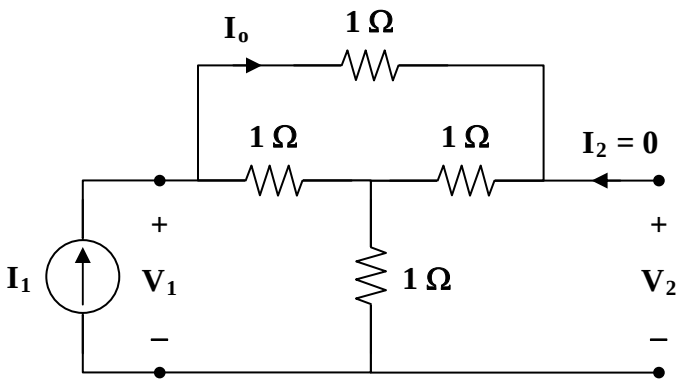

(a)

$$\mathbf{V}_1 = \mathbf{I}_1[1+1\,||\,(1+1)] = \mathbf{I}_1\left(1+\frac{2}{3}\right) = \frac{5}{3}\mathbf{I}_1$$

$$\mathbf{z}_{11} = \frac{\mathbf{V}_1}{\mathbf{I}_1} = \frac{5}{3}$$

$$\mathbf{I}_o = \frac{1}{1+2}\mathbf{I}_1 = \frac{1}{3}\mathbf{I}_1$$

$$-\mathbf{V}_2 + \mathbf{I}_o + \mathbf{I}_1 = 0$$

$$\mathbf{V}_2 = \frac{1}{3}\mathbf{I}_1 + \mathbf{I}_1 = \frac{4}{3}\mathbf{I}_1$$

$$\mathbf{z}_{21} = \frac{\mathbf{V}_2}{\mathbf{I}_1} = \frac{4}{3}$$

To obtain $\mathbf{z}_{22}$ and $\mathbf{z}_{12}$, consider the circuit in Fig. (b).

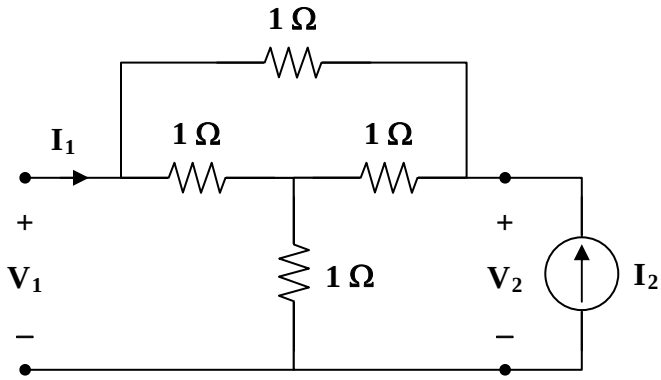

(b)

www.konkur.in

Due to symmetry, this is similar to the circuit in Fig. (a).

$$\mathbf{z}_{22} = \mathbf{z}_{11} = \frac{5}{3}, \qquad \mathbf{z}_{21} = \mathbf{z}_{12} = \frac{4}{3}$$

$$[\mathbf{z}] = \begin{bmatrix} \frac{5}{3} & \frac{4}{3} \\ \frac{4}{3} & \frac{5}{3} \end{bmatrix} \Omega$$

(b) $$[\mathbf{h}] = \begin{bmatrix} \frac{\Delta_z}{z_{22}} & \frac{z_{12}}{z_{22}} \\ \frac{-z_{21}}{z_{22}} & \frac{1}{z_{22}} \end{bmatrix} = \begin{bmatrix} \frac{3}{5}\Omega & \frac{4}{5} \\ \frac{-4}{5} & \frac{3}{5}\mathrm{S} \end{bmatrix}$$

(c) $$[\mathbf{T}] = \begin{bmatrix} \frac{z_{11}}{z_{21}} & \frac{\Delta_z}{z_{21}} \\ \frac{1}{z_{21}} & \frac{z_{22}}{z_{21}} \end{bmatrix} = \begin{bmatrix} \frac{5}{4} & \frac{3}{4}\Omega \\ \frac{3}{4}\mathrm{S} & \frac{5}{4} \end{bmatrix}$$

www.konkur.in

Chapter 19, Solution 62.

Consider the circuit shown below.

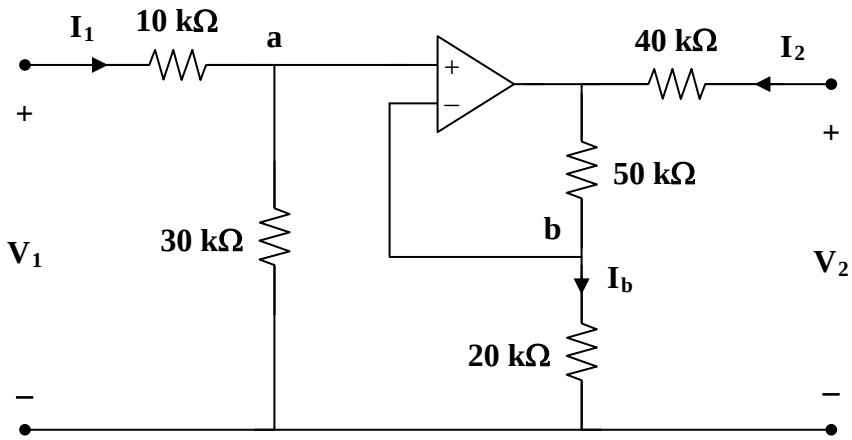

Since no current enters the input terminals of the op amp,

$$\mathbf{V}_1 = (10+30)\times 10^3\,\mathbf{I}_1 \qquad (1)$$

But $$\mathbf{V}_a = \mathbf{V}_b = \frac{30}{40}\mathbf{V}_1 = \frac{3}{4}\mathbf{V}_1$$

$$\mathbf{I}_b = \frac{\mathbf{V}_b}{20\times 10^3} = \frac{3}{80\times 10^3}\mathbf{V}_1$$

which is the same current that flows through the 50-kΩ resistor.

Thus, $$\mathbf{V}_2 = 40\times 10^3\,\mathbf{I}_2 + (50+20)\times 10^3\,\mathbf{I}_b$$

$$\mathbf{V}_2 = 40\times 10^3\,\mathbf{I}_2 + 70\times 10^3\cdot\frac{3}{80\times 10^3}\mathbf{V}_1$$

$$\mathbf{V}_2 = \frac{21}{8}\mathbf{V}_1 + 40\times 10^3\,\mathbf{I}_2$$

$$\mathbf{V}_2 = 105\times 10^3\,\mathbf{I}_1 + 40\times 10^3\,\mathbf{I}_2 \qquad (2)$$

From (1) and (2),

$$[\mathbf{z}] = \begin{bmatrix} \mathbf{40} & \mathbf{0} \\ \mathbf{105} & \mathbf{40} \end{bmatrix}\mathbf{k\Omega}$$

$$\Delta_z = \mathbf{z}_{11}\,\mathbf{z}_{22} - \mathbf{z}_{12}\,\mathbf{z}_{21} = \mathbf{16\times 10^8}$$

www.konkur.in

$$[\mathbf{T}] = \begin{bmatrix} \mathbf{A} & \mathbf{B} \\ \mathbf{C} & \mathbf{D} \end{bmatrix} = \begin{bmatrix} \dfrac{\mathbf{z}_{11}}{\mathbf{z}_{21}} & \dfrac{\Delta_z}{\mathbf{z}_{21}} \\ \dfrac{1}{\mathbf{z}_{21}} & \dfrac{\mathbf{z}_{22}}{\mathbf{z}_{21}} \end{bmatrix} = \begin{bmatrix} \mathbf{0.381} & \mathbf{15.24\ k\Omega} \\ \mathbf{9.52\ \mu S} & \mathbf{0.381} \end{bmatrix}$$

www.konkur.in

Chapter 19, Solution 63.

To get z_{11} and z_{21}, consider the circuit below.

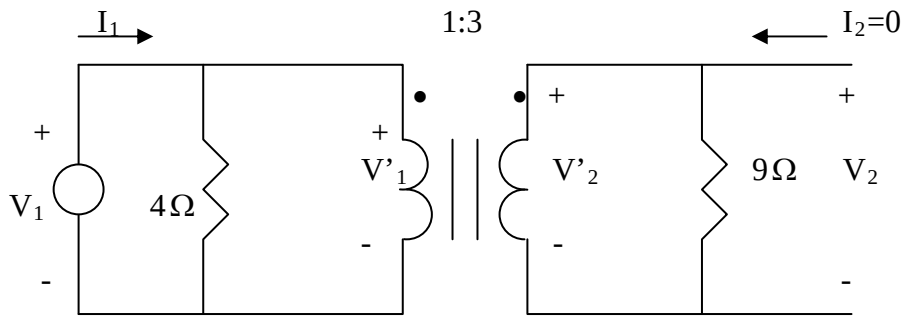

$$Z_R = \frac{9}{n^2} = 1, \qquad n = 3$$

$$V_1 = (4 // Z_R)I_1 = \frac{4}{5}I_1 \quad \longrightarrow \quad z_{11} = \frac{V_1}{I_1} = 0.8$$

$$V_2 = V_2' = nV_1' = nV_1 = 3(4/5)I_1 \quad \longrightarrow \quad z_{21} = \frac{V_2}{I_1} = 2.4$$

To get z_{21} and z_{22}, consider the circuit below.

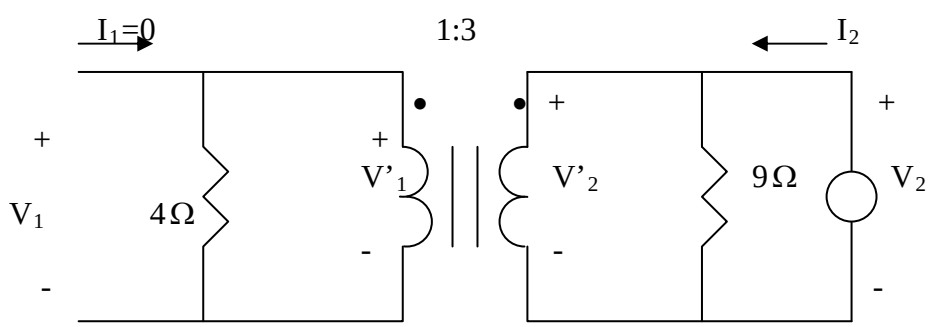

$$Z_R' = n^2(4) = 36, \qquad n = 3$$

$$V_2 = (9 // Z_R')I_2 = \frac{9x36}{45}I_2 \quad \longrightarrow \quad z_{22} = \frac{V_2}{I_2} = 7.2$$

www.konkur.in

$$V_1 = \frac{V_2}{n} = \frac{V_2}{3} = 2.4I_2 \quad \longrightarrow \quad z_{21} = \frac{V_1}{I_2} = 2.4$$

Thus,

$$\mathbf{[z] = \begin{bmatrix} 0.8 & 2.4 \\ 2.4 & 7.2 \end{bmatrix} \Omega}$$

www.konkur.in

Chapter 19, Solution 64.

$$1\,\mu F \longrightarrow \frac{1}{j\omega C} = \frac{-j}{(10^3)(10^{-6})} = -j\,k\Omega$$

Consider the op amp circuit below.

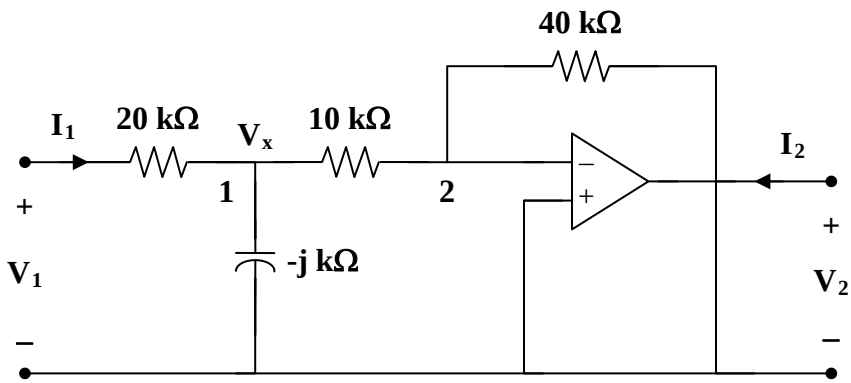

At node 1,

$$\frac{\mathbf{V}_1 - \mathbf{V}_x}{20} = \frac{\mathbf{V}_x}{-j} + \frac{\mathbf{V}_x - 0}{10}$$

$$\mathbf{V}_1 = (3 + j20)\,\mathbf{V}_x \qquad (1)$$

At node 2,

$$\frac{\mathbf{V}_x - 0}{10} = \frac{0 - \mathbf{V}_2}{40} \longrightarrow \mathbf{V}_x = \frac{-1}{4}\mathbf{V}_2 \qquad (2)$$

But

$$\mathbf{I}_1 = \frac{\mathbf{V}_1 - \mathbf{V}_x}{20 \times 10^3} \qquad (3)$$

Substituting (2) into (3) gives

$$\mathbf{I}_1 = \frac{\mathbf{V}_1 + 0.25\mathbf{V}_2}{20 \times 10^3} = 50 \times 10^{-6}\,\mathbf{V}_1 + 12.5 \times 10^{-6}\,\mathbf{V}_2 \qquad (4)$$

Substituting (2) into (1) yields

$$\mathbf{V}_1 = \frac{-1}{4}(3 + j20)\,\mathbf{V}_2$$

or

$$0 = \mathbf{V}_1 + (0.75 + j5)\,\mathbf{V}_2 \qquad (5)$$

Comparing (4) and (5) with the following equations

$$\mathbf{I}_1 = \mathbf{y}_{11}\,\mathbf{V}_1 + \mathbf{y}_{12}\,\mathbf{V}_2$$

$$\mathbf{I}_2 = \mathbf{y}_{21}\,\mathbf{V}_1 + \mathbf{y}_{22}\,\mathbf{V}_2$$

www.konkur.in

indicates that $\mathbf{I}_2 = 0$ and that

$$[\mathbf{y}] = \begin{bmatrix} \mathbf{50 \times 10^{-6}} & \mathbf{12.5 \times 10^{-6}} \\ \mathbf{1} & \mathbf{0.75 + j5} \end{bmatrix} \mathbf{S}$$

$$\Delta_y = (77.5 + j25. - 12.5) \times 10^{-6} = (65 + j250) \times 10^{-6}$$

$$[\mathbf{h}] = \begin{bmatrix} \dfrac{1}{\mathbf{y}_{11}} & \dfrac{-\mathbf{y}_{12}}{\mathbf{y}_{11}} \\ \dfrac{\mathbf{y}_{21}}{\mathbf{y}_{11}} & \dfrac{\Delta_y}{\mathbf{y}_{11}} \end{bmatrix} = \begin{bmatrix} \mathbf{2 \times 10^4\ \Omega} & \mathbf{-0.25} \\ \mathbf{2 \times 10^4} & \mathbf{1.3 + j5\ S} \end{bmatrix}$$

www.konkur.in

Chapter 19, Solution 65.

The network consists of two two-ports in series. It is better to work with z parameters and then convert to y parameters. It is obvious that the upper 1 Ω resistor is shorted out by the top circuit so we are essentially left with 2 Ω connected to 3 Ω. This then produces the Z parameters

$$[\mathbf{z}] = \begin{bmatrix} 5\Omega & 3\Omega \\ 3\Omega & 3\Omega \end{bmatrix}$$

$$\Delta_z = 15 - 9 = 6$$

$$[\mathbf{y}] = \begin{bmatrix} \dfrac{\mathbf{z}_{22}}{\Delta_z} & \dfrac{-\mathbf{z}_{12}}{\Delta_z} \\ \dfrac{-\mathbf{z}_{21}}{\Delta_z} & \dfrac{\mathbf{z}_{11}}{\Delta_z} \end{bmatrix} = \begin{bmatrix} \mathbf{0.5} & \mathbf{-0.5} \\ \mathbf{-0.5} & \dfrac{\mathbf{5}}{\mathbf{6}} \end{bmatrix} \mathbf{S}$$

www.konkur.in

Chapter 19, Solution 66.

Since we have two two-ports in series, it is better to convert the given y parameters to z parameters.

$$\Delta_y = \mathbf{y}_{11}\mathbf{y}_{22} - \mathbf{y}_{12}\mathbf{y}_{21} = (2\times10^{-3})(10\times10^{-3}) - 0 = 20\times10^{-6}$$

$$[\mathbf{z}_a] = \begin{bmatrix} \dfrac{\mathbf{y}_{22}}{\Delta_y} & \dfrac{-\mathbf{y}_{12}}{\Delta_y} \\ \dfrac{-\mathbf{y}_{21}}{\Delta_y} & \dfrac{\mathbf{y}_{11}}{\Delta_y} \end{bmatrix} = \begin{bmatrix} 500\,\Omega & 0 \\ 0 & 100\,\Omega \end{bmatrix}$$

$$[\mathbf{z}] = \begin{bmatrix} 500 & 0 \\ 0 & 100 \end{bmatrix} + \begin{bmatrix} 100 & 100 \\ 100 & 100 \end{bmatrix} = \begin{bmatrix} 600 & 100 \\ 100 & 200 \end{bmatrix}$$

i.e.

$$\mathbf{V}_1 = \mathbf{z}_{11}\mathbf{I}_1 + \mathbf{z}_{12}\mathbf{I}_2$$
$$\mathbf{V}_2 = \mathbf{z}_{21}\mathbf{I}_1 + \mathbf{z}_{22}\mathbf{I}_2$$

or

$$\mathbf{V}_1 = 600\mathbf{I}_1 + 100\mathbf{I}_2 \qquad (1)$$
$$\mathbf{V}_2 = 100\mathbf{I}_1 + 200\mathbf{I}_2 \qquad (2)$$

But, at the input port,

$$\mathbf{V}_s = \mathbf{V}_1 + 60\mathbf{I}_1 \qquad (3)$$

and at the output port,

$$\mathbf{V}_2 = \mathbf{V}_o = -300\mathbf{I}_2 \qquad (4)$$

From (2) and (4),

$$100\mathbf{I}_1 + 200\mathbf{I}_2 = -300\mathbf{I}_2$$
$$\mathbf{I}_1 = -5\mathbf{I}_2 \qquad (5)$$

Substituting (1) and (5) into (3),

$$\begin{aligned} \mathbf{V}_s &= 600\mathbf{I}_1 + 100\mathbf{I}_2 + 60\mathbf{I}_1 \\ &= (660)(-5)\mathbf{I}_2 + 100\mathbf{I}_2 \\ &= -3200\mathbf{I}_2 \qquad (6) \end{aligned}$$

From (4) and (6),

$$\frac{\mathbf{V}_o}{\mathbf{V}_2} = \frac{-300\mathbf{I}_2}{-3200\mathbf{I}_2} = \mathbf{0.09375}$$

Chapter 19, Solution 67.

We first the y parameters, To find y_{11} and y_{21} consider the circuit below.

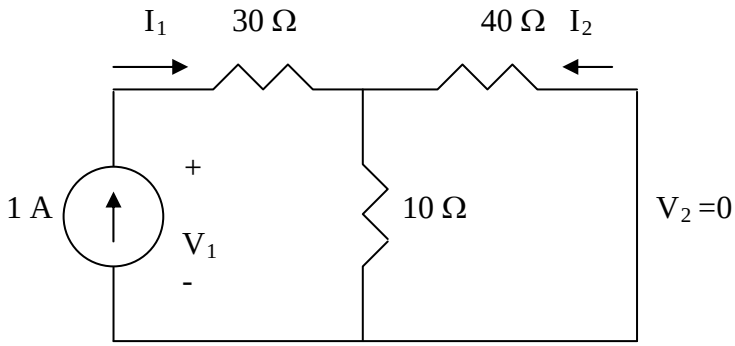

$$V_1 = I_1(30 + 10 // 40) = 38I_1 \longrightarrow y_{11} = \frac{I_1}{V_1} = \frac{1}{38}$$

By current division,

$$I_2 = \frac{-10}{50} I_1 = -0.2I_1 \longrightarrow y_{21} = \frac{I_2}{V_1} = \frac{-0.2I_1}{38I_1} = \frac{-1}{190}$$

To find y_{22} and y_{12} consider the circuit below.

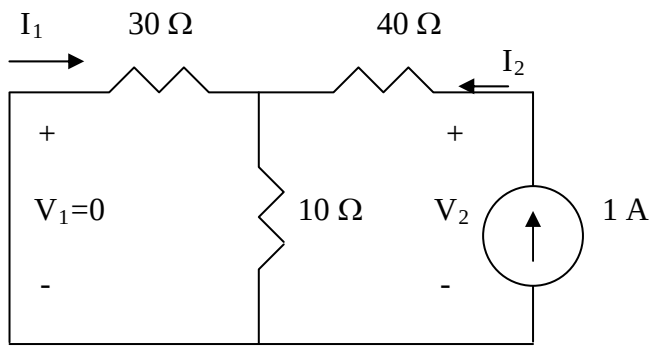

$$V_2 = (40 + 10 // 30)I_2 = 47.5I_2 \longrightarrow y_{22} = \frac{I_2}{V_2} = \frac{2}{93} \quad y_{22} = 2/95$$

By current division,

$$I_1 = -\frac{10}{30+10} I_2 = -\frac{I_2}{4} \longrightarrow y_{12} = \frac{I_1}{V_2} = \frac{-\frac{1}{4} I_2}{47.5I_2} = -\frac{1}{190}$$

$$[y] = \begin{bmatrix} 1/38 & -1/190 \\ -1/190 & 2/95 \end{bmatrix}$$

For three copies cascaded in parallel, we can use MATLAB.

```
>> Y=[1/38,-1/190;-1/190,2/95]
```

www.konkur.in

```
Y =
   0.0263   -0.0053
  -0.0053    0.0211
>> Y3=3*Y
Y3 =
   0.0789   -0.0158
  -0.0158    0.0632
>> DY=0.0789*0.0632-0.0158*0.158
DY =
   0.0025
>> T=[0.0632/0.0158,1/0.0158;DY/0.0158,0.0789/0.0158]
T =
   4.0000   63.2911
   0.1576    4.9937
```

$$T = \begin{bmatrix} \mathbf{4} & \mathbf{63.29\,\Omega} \\ \mathbf{0.1576\,S} & \mathbf{4.994} \end{bmatrix}$$

www.konkur.in

Chapter 19, Solution 68.

For the upper network N_a, $[\mathbf{y}_a] = \begin{bmatrix} 4 & -2 \\ -2 & 4 \end{bmatrix}$

and for the lower network N_b, $[\mathbf{y}_b] = \begin{bmatrix} 2 & -1 \\ 1 & 2 \end{bmatrix}$

For the overall network,

$$[\mathbf{y}] = [\mathbf{y}_a] + [\mathbf{y}_b] = \begin{bmatrix} 6 & -3 \\ -3 & 6 \end{bmatrix}$$

$$\Delta_y = 36 - 9 = 27$$

$$[\mathbf{h}] = \begin{bmatrix} \dfrac{1}{\mathbf{y}_{11}} & \dfrac{-\mathbf{y}_{12}}{\mathbf{y}_{11}} \\ \dfrac{\mathbf{y}_{21}}{\mathbf{y}_{11}} & \dfrac{\Delta_y}{\mathbf{y}_{11}} \end{bmatrix} = \begin{bmatrix} \dfrac{\mathbf{1}}{\mathbf{6}}\,\mathbf{\Omega} & \dfrac{\mathbf{1}}{\mathbf{2}} \\ \dfrac{\mathbf{1}}{\mathbf{2}} & \dfrac{\mathbf{9}}{\mathbf{2}}\,\mathbf{S} \end{bmatrix}$$

Chapter 19, Solution 69.

We first determine the y parameters for the upper network N_a.
To get $\mathbf{y}_{11}$ and $\mathbf{y}_{21}$, consider the circuit in Fig. (a).

$$n = \frac{1}{2}, \qquad \mathbf{Z}_R = \frac{1/s}{n^2} = \frac{4}{s}$$

$$\mathbf{V}_1 = (2 + \mathbf{Z}_R)\mathbf{I}_1 = \left(2 + \frac{4}{s}\right)\mathbf{I}_1 = \left(\frac{2s+4}{s}\right)\mathbf{I}_1$$

$$\mathbf{y}_{11} = \frac{\mathbf{I}_1}{\mathbf{V}_1} = \frac{s}{2(s+2)}$$

$$\mathbf{I}_2 = \frac{-\mathbf{I}_1}{n} = -2\mathbf{I}_1 = \frac{-s\mathbf{V}_1}{s+2}$$

$$\mathbf{y}_{21} = \frac{\mathbf{I}_2}{\mathbf{V}_1} = \frac{-s}{s+2}$$

To get $\mathbf{y}_{22}$ and $\mathbf{y}_{12}$, consider the circuit in Fig. (b).

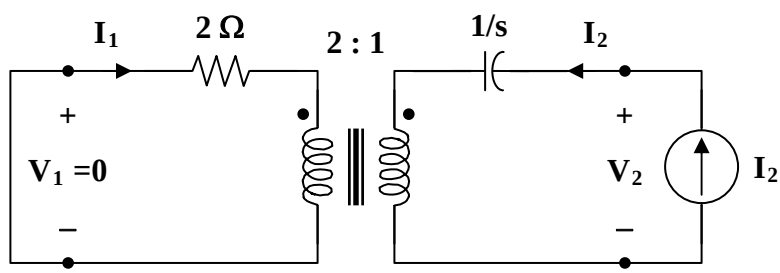

(b)

$$\mathbf{Z}_R' = (n^2)(2) = \left(\frac{1}{4}\right)(2) = \frac{1}{2}$$

$$\mathbf{V}_2 = \left(\frac{1}{s} + \mathbf{Z}_R'\right)\mathbf{I}_2 = \left(\frac{1}{s} + \frac{1}{2}\right)\mathbf{I}_2 = \left(\frac{s+2}{2s}\right)\mathbf{I}_2$$

$$\mathbf{y}_{22} = \frac{\mathbf{I}_2}{\mathbf{V}_2} = \frac{2s}{s+2}$$

$$\mathbf{I}_1 = -n\mathbf{I}_2 = \left(\frac{-1}{2}\right)\left(\frac{2s}{s+2}\right)\mathbf{V}_2 = \left(\frac{-s}{s+2}\right)\mathbf{V}_2$$

$$\mathbf{y}_{12} = \frac{\mathbf{I}_1}{\mathbf{V}_2} = \frac{-s}{s+2}$$

$$[\mathbf{y}_a] = \begin{bmatrix} \frac{s}{2(s+2)} & \frac{-s}{s+2} \\ \frac{-s}{s+2} & \frac{2s}{s+2} \end{bmatrix}$$

For the lower network N_b, we obtain $\mathbf{y}_{11}$ and $\mathbf{y}_{21}$ by referring to the network in Fig. (c).

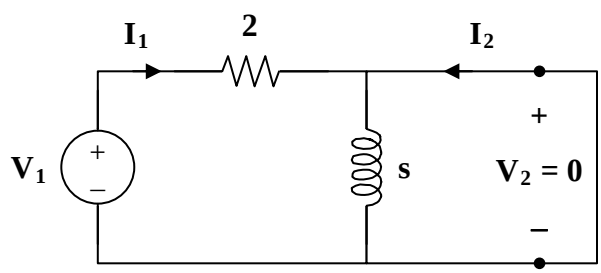

(c)

$$\mathbf{V}_1 = 2\mathbf{I}_1 \longrightarrow \mathbf{y}_{11} = \frac{\mathbf{I}_1}{\mathbf{V}_1} = \frac{1}{2}$$

$$\mathbf{I}_2 = -\mathbf{I}_1 = \frac{-\mathbf{V}_1}{2} \longrightarrow \mathbf{y}_{21} = \frac{\mathbf{I}_2}{\mathbf{V}_1} = \frac{-1}{2}$$

To get $\mathbf{y}_{22}$ and $\mathbf{y}_{12}$, refer to the circuit in Fig. (d).

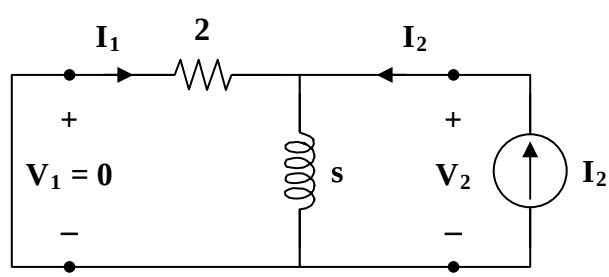

(d)

$$\mathbf{V}_2 = (s \parallel 2)\mathbf{I}_2 = \frac{2s}{s+2}\mathbf{I}_2 \longrightarrow \mathbf{y}_{22} = \frac{\mathbf{I}_2}{\mathbf{V}_2} = \frac{s+2}{2s}$$

$$\mathbf{I}_1 = -\mathbf{I}_2 \cdot \frac{-s}{s+2} = \left(\frac{-s}{s+2}\right)\left(\frac{s+2}{2s}\right)\mathbf{V}_2 = \frac{-\mathbf{V}_2}{2}$$

www.konkur.in

$$\mathbf{y}_{12} = \frac{\mathbf{I}_1}{\mathbf{V}_2} = \frac{-1}{2}$$

$$[\mathbf{y}_b] = \begin{bmatrix} 1/2 & -1/2 \\ -1/2 & (s+2)/2s \end{bmatrix}$$

$$[\mathbf{y}] = [\mathbf{y}_a] + [\mathbf{y}_b] = \begin{bmatrix} \dfrac{s+1}{s+2} & \dfrac{-(3s+2)}{2(s+2)} \\ \dfrac{-(3s+2)}{2(s+2)} & \dfrac{5s^2+4s+4}{2s(s+2)} \end{bmatrix}$$

www.konkur.in

Chapter 19, Solution 70.

We may obtain the g parameters from the given z parameters.

$$[\mathbf{z}_a] = \begin{bmatrix} 25 & 20 \\ 5 & 10 \end{bmatrix}, \qquad \Delta_{z_a} = 250 - 100 = 150$$

$$[\mathbf{z}_b] = \begin{bmatrix} 50 & 25 \\ 25 & 30 \end{bmatrix}, \qquad \Delta_{z_b} = 1500 - 625 = 875$$

$$[\mathbf{g}] = \begin{bmatrix} \dfrac{1}{z_{11}} & \dfrac{-z_{12}}{z_{11}} \\ \dfrac{z_{21}}{z_{11}} & \dfrac{\Delta_z}{z_{11}} \end{bmatrix}$$

$$[\mathbf{g}_a] = \begin{bmatrix} 0.04 & -0.8 \\ 0.2 & 6 \end{bmatrix}, \qquad [\mathbf{g}_b] = \begin{bmatrix} 0.02 & -0.5 \\ 0.5 & 17.5 \end{bmatrix}$$

$$[\mathbf{g}] = [\mathbf{g}_a] + [\mathbf{g}_b] = \begin{bmatrix} \mathbf{0.06\ S} & \mathbf{-1.3} \\ \mathbf{0.7} & \mathbf{23.5\ \Omega} \end{bmatrix}$$

www.konkur.in

Chapter 19, Solution 71.

This is a parallel-series connection of two two-ports. We need to add their g parameters together and obtain z parameters from there.

For the transformer,

$$V_1 = \frac{1}{2}V_2, \quad I_1 = -2I_2$$

Comparing this with

$$V_1 = AV_2 - BI_2, \qquad I_1 = CV_2 - DI_2$$

shows that

$$[T_{b1}] = \begin{bmatrix} 0.5 & 0 \\ 0 & 2 \end{bmatrix}$$

To get A and C for T_{b2} , consider the circuit below.

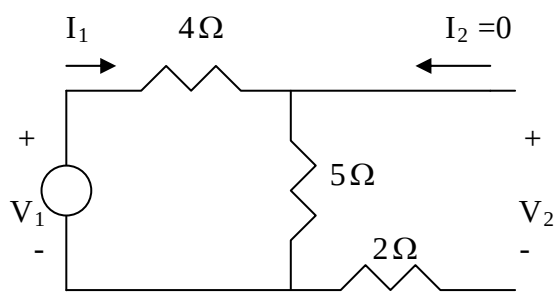

$$V_1 = 9I_1, \qquad V_2 = 5I_1$$

$$A = \frac{V_1}{V_2} = 9/5 = 1.8, \qquad C = \frac{I_1}{V_2} = 1/5 = 0.2$$

We obtain B and D by looking at the circuit below.

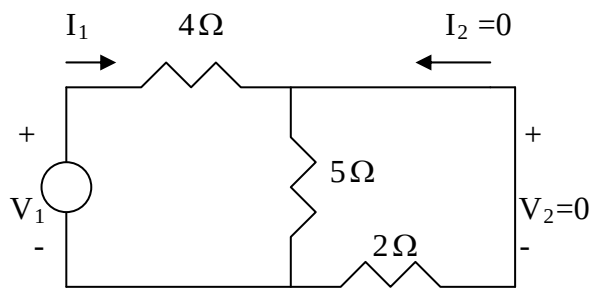

$$I_2 = -\frac{5}{7}I_1 \qquad \longrightarrow \qquad D = -\frac{I_1}{I_2} = 7/5 = 1.4$$

$$V_1 = 4I_1 - 2I_2 = 4(-\frac{7}{5}I_2) - 2I_2 = -\frac{38}{5}I_2 \qquad \longrightarrow \qquad B = -\frac{V_1}{I_2} = 7.6$$

$$[T_{b2}] = \begin{bmatrix} 1.8 & 7.6 \\ 0.2 & 1.4 \end{bmatrix}$$

$$[T] = [T_{b1}][T_{b2}] = \begin{bmatrix} 0.9 & 3.8 \\ 0.4 & 2.8 \end{bmatrix}, \qquad \Delta_T = 1$$

$$[g_b] = \begin{bmatrix} C/A & -\Delta_T/A \\ 1/A & B/A \end{bmatrix} = \begin{bmatrix} 0.4444 & -1.1111 \\ 1.1111 & 4.2222 \end{bmatrix}$$

From Prob. 19.52,

$$[T_a] = \begin{bmatrix} 1.8 & 18.8 \\ 0.1 & 1.6 \end{bmatrix}$$

$$[g_a] = \begin{bmatrix} C/A & -\Delta_T/A \\ 1/A & B/A \end{bmatrix} = \begin{bmatrix} 0.05555 & -0.5555 \\ 0.5555 & 10.4444 \end{bmatrix}$$

$$[g] = [g_a] + [g_b] = \begin{bmatrix} 0.4999 & -1.6667 \\ 1.6667 & 14.667 \end{bmatrix}$$

Thus,

www.konkur.in

$$[z] = \begin{bmatrix} 1/g_{11} & -g_{21}/g_{11} \\ g_{21}/g_{11} & \Delta_g/g_{11} \end{bmatrix} = \underline{\begin{bmatrix} 2 & -3.334 \\ 3.334 & 20.22 \end{bmatrix}\Omega}$$

www.konkur.in

Chapter 19, Solution 72.

Consider the network shown below.

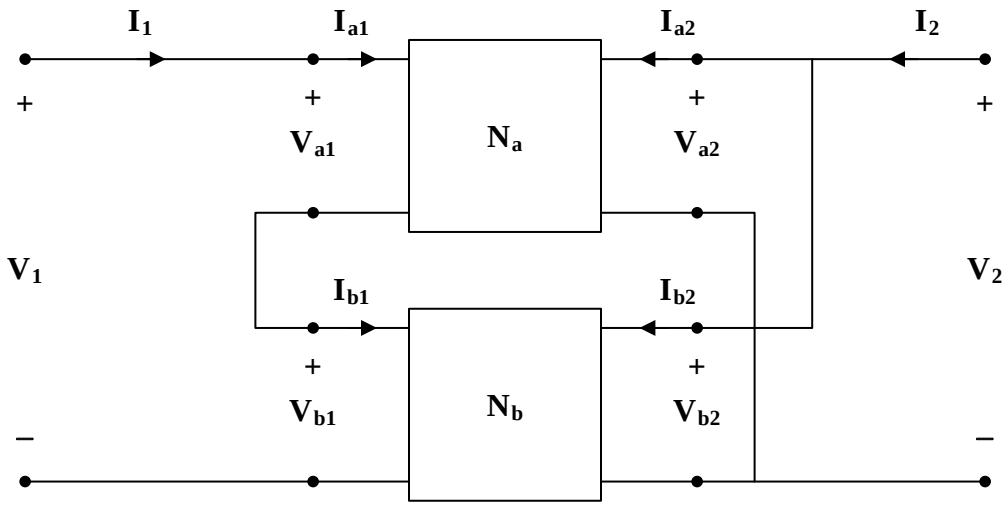

$$\mathbf{V}_{a1} = 25\mathbf{I}_{a1} + 4\mathbf{V}_{a2} \qquad (1)$$
$$\mathbf{I}_{a2} = -4\mathbf{I}_{a1} + \mathbf{V}_{a2} \qquad (2)$$
$$\mathbf{V}_{b1} = 16\mathbf{I}_{b1} + \mathbf{V}_{b2} \qquad (3)$$
$$\mathbf{I}_{b2} = -\mathbf{I}_{b1} + 0.5\mathbf{V}_{b2} \qquad (4)$$

$$\mathbf{V}_1 = \mathbf{V}_{a1} + \mathbf{V}_{b1}$$
$$\mathbf{V}_2 = \mathbf{V}_{a2} = \mathbf{V}_{b2}$$
$$\mathbf{I}_2 = \mathbf{I}_{a2} + \mathbf{I}_{b2}$$
$$\mathbf{I}_1 = \mathbf{I}_{a1}$$

Now, rewrite (1) to (4) in terms of $\mathbf{I}_1$ and $\mathbf{V}_2$

$$\mathbf{V}_{a1} = 25\mathbf{I}_1 + 4\mathbf{V}_2 \qquad (5)$$
$$\mathbf{I}_{a2} = -4\mathbf{I}_1 + \mathbf{V}_2 \qquad (6)$$
$$\mathbf{V}_{b1} = 16\mathbf{I}_{b1} + \mathbf{V}_2 \qquad (7)$$
$$\mathbf{I}_{b2} = -\mathbf{I}_{b1} + 0.5\mathbf{V}_2 \qquad (8)$$

Adding (5) and (7),

$$\mathbf{V}_1 = 25\mathbf{I}_1 + 16\mathbf{I}_{b1} + 5\mathbf{V}_2 \qquad (9)$$

Adding (6) and (8),

$$\mathbf{I}_2 = -4\mathbf{I}_1 - \mathbf{I}_{b1} + 1.5\mathbf{V}_2 \qquad (10)$$

$$\mathbf{I}_{b1} = \mathbf{I}_{a1} = \mathbf{I}_1 \qquad (11)$$

www.konkur.in

Because the two networks N_a and N_b are independent,

$$\mathbf{I}_2 = -5\mathbf{I}_1 + 1.5\mathbf{V}_2$$

or

$$\mathbf{V}_2 = 3.333\mathbf{I}_1 + 0.6667\mathbf{I}_2 \qquad (12)$$

Substituting (11) and (12) into (9),

$$\mathbf{V}_1 = 41\mathbf{I}_1 + \frac{25}{1.5}\mathbf{I}_1 + \frac{5}{1.5}\mathbf{I}_2$$

$$\mathbf{V}_1 = 57.67\mathbf{I}_1 + 3.333\mathbf{I}_2 \qquad (13)$$

Comparing (12) and (13) with the following equations

$$\mathbf{V}_1 = \mathbf{z}_{11}\mathbf{I}_1 + \mathbf{z}_{12}\mathbf{I}_2$$

$$\mathbf{V}_2 = \mathbf{z}_{21}\mathbf{I}_1 + \mathbf{z}_{22}\mathbf{I}_2$$

indicates that

$$[\mathbf{z}] = \begin{bmatrix} \mathbf{57.67} & \mathbf{3.333} \\ \mathbf{3.333} & \mathbf{0.6667} \end{bmatrix}\Omega$$

Alternatively,

$$[\mathbf{h}_a] = \begin{bmatrix} 25 & 4 \\ -4 & 1 \end{bmatrix}, \qquad [\mathbf{h}_b] = \begin{bmatrix} 16 & 1 \\ -1 & 0.5 \end{bmatrix}$$

$$[\mathbf{h}] = [\mathbf{h}_a] + [\mathbf{h}_b] = \begin{bmatrix} 41 & 5 \\ -5 & 1.5 \end{bmatrix} \qquad \Delta_h = 61.5 + 25 = 86.5$$

$$[\mathbf{z}] = \begin{bmatrix} \dfrac{\Delta_h}{\mathbf{h}_{22}} & \dfrac{\mathbf{h}_{12}}{\mathbf{h}_{22}} \\ \dfrac{-\mathbf{h}_{21}}{\mathbf{h}_{22}} & \dfrac{1}{\mathbf{h}_{22}} \end{bmatrix} = \begin{bmatrix} \mathbf{57.67} & \mathbf{3.333} \\ \mathbf{3.333} & \mathbf{0.6667} \end{bmatrix}\Omega$$

as obtained previously.

www.konkur.in

Chapter 19, Solution 73.

From Problem 19.6,

$$[z] = \begin{bmatrix} 25 & 20 \\ 24 & 30 \end{bmatrix}, \qquad \Delta z = 25x30 - 20x24 = 270$$

$$A = \frac{z_{11}}{z_{21}} = \frac{25}{24}, \qquad B = \frac{\Delta z}{z_{21}} = \frac{270}{24}$$

$$C = \frac{1}{z_{21}} = \frac{1}{24}, \; D = \frac{z_{22}}{z_{21}} = \frac{30}{24}$$

The overall ABCD parameters can be found using MATLAB.

```
>> T=[25/24,270/24;1/24,30/24]
T =
   1.0417   11.2500
   0.0417    1.2500
>> T3=T*T*T
T3 =
   2.6928   49.7070
   0.1841    3.6133
>> Z=[2.693/0.1841,(2.693*3.613-0.1841*49.71)/0.1841;1/0.1841,3.613/0.1841]
Z =
  14.6279    3.1407
   5.4318   19.6252
```

$$\mathbf{[Z]} = \underline{\begin{bmatrix} \mathbf{14.628} & \mathbf{3.141} \\ \mathbf{5.432} & \mathbf{19.625} \end{bmatrix}}\,\mathbf{\Omega}$$

www.konkur.in

Chapter 19, Solution 74.

From Prob. 18.35, the transmission parameters for the circuit in Figs. (a) and (b) are

$$[\mathbf{T}_a] = \begin{bmatrix} 1 & \mathbf{Z} \\ 0 & 1 \end{bmatrix}, \qquad [\mathbf{T}_b] = \begin{bmatrix} 1 & 0 \\ 1/\mathbf{Z} & 1 \end{bmatrix}$$

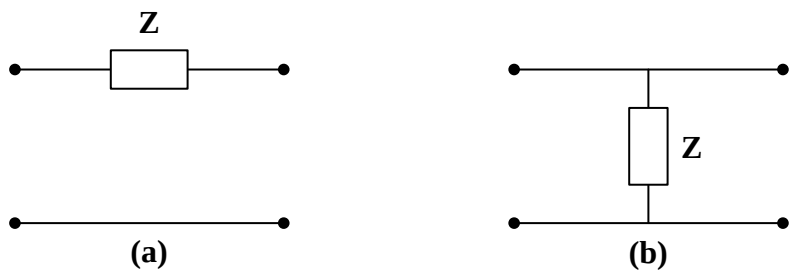

We partition the given circuit into six subcircuits similar to those in Figs. (a) and (b) as shown in Fig. (c) and obtain $[\mathbf{T}]$ for each.

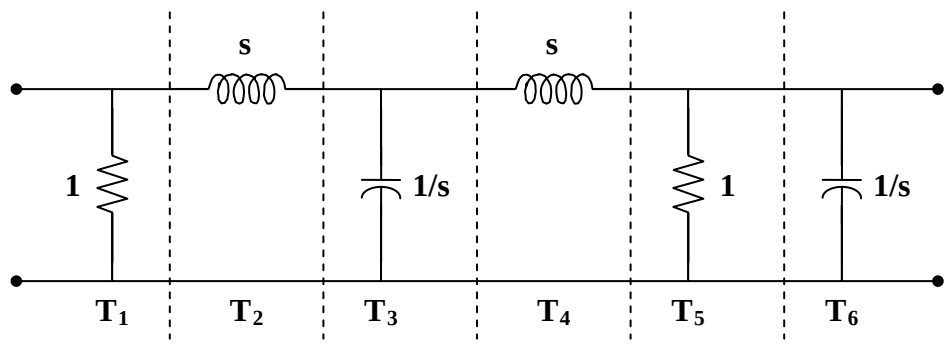

$$[\mathbf{T}_1] = \begin{bmatrix} 1 & 0 \\ 1 & 1 \end{bmatrix}, \qquad [\mathbf{T}_2] = \begin{bmatrix} 1 & s \\ 0 & 1 \end{bmatrix}, \qquad [\mathbf{T}_3] = \begin{bmatrix} 1 & 0 \\ s & 1 \end{bmatrix}$$

$$[\mathbf{T}_4] = [\mathbf{T}_2], \qquad [\mathbf{T}_5] = [\mathbf{T}_1], \qquad [\mathbf{T}_6] = [\mathbf{T}_3]$$

$$[\mathbf{T}] = [\mathbf{T}_1][\mathbf{T}_2][\mathbf{T}_3][\mathbf{T}_4][\mathbf{T}_5][\mathbf{T}_6] = [\mathbf{T}_1][\mathbf{T}_2][\mathbf{T}_3][\mathbf{T}_4]\begin{bmatrix} 1 & 0 \\ 1 & 1 \end{bmatrix}\begin{bmatrix} 1 & 0 \\ s & 1 \end{bmatrix}$$

$$= [\mathbf{T}_1][\mathbf{T}_2][\mathbf{T}_3][\mathbf{T}_4]\begin{bmatrix} 1 & 0 \\ s+1 & 1 \end{bmatrix} = [\mathbf{T}_1][\mathbf{T}_2][\mathbf{T}_3]\begin{bmatrix} 1 & s \\ 0 & 1 \end{bmatrix}\begin{bmatrix} 1 & 0 \\ s+1 & 1 \end{bmatrix}$$

$$= [\mathbf{T}_1][\mathbf{T}_2]\begin{bmatrix} 1 & 0 \\ s & 1 \end{bmatrix}\begin{bmatrix} s^2+s+1 & s \\ s+1 & 1 \end{bmatrix}$$

www.konkur.in

$$= [\mathbf{T}_1]\begin{bmatrix} 1 & s \\ 0 & 1 \end{bmatrix}\begin{bmatrix} s^2+s+1 & s \\ s^3+s^2+2s+1 & s^2+1 \end{bmatrix}$$

$$= \begin{bmatrix} 1 & 0 \\ 1 & 1 \end{bmatrix}\begin{bmatrix} s^4+s^3+3s^2+2s+1 & s^3+2s \\ s^3+s^2+2s+1 & s^2+1 \end{bmatrix}$$

$$[\mathbf{T}] = \begin{bmatrix} \mathbf{s^4+s^3+3s^2+2s+1} & \mathbf{s^3+2s} \\ \mathbf{s^4+2s^3+4s^2+4s+2} & \mathbf{s^3+s^2+2s+1} \end{bmatrix}$$

Note that $\mathbf{AB} - \mathbf{CD} = 1$ as expected.

www.konkur.in

Chapter 19, Solution 75.

(a) We convert $[z_a]$ and $[z_b]$ to T-parameters. For N_a, $\Delta_z = 40 - 24 = 16$.

$$[T_a] = \begin{bmatrix} z_{11}/z_{21} & \Delta_z/z_{21} \\ 1/z_{21} & z_{22}/z_{21} \end{bmatrix} = \begin{bmatrix} 2 & 4 \\ 0.25 & 1.25 \end{bmatrix}$$

For N_b, $\Delta_y = 80 + 8 = 88$.

$$[T_b] = \begin{bmatrix} -y_{22}/y_{21} & -1/y_{21} \\ -\Delta_y/y_{21} & -y_{11}/y_{21} \end{bmatrix} = \begin{bmatrix} -5 & -0.5 \\ -44 & -4 \end{bmatrix}$$

$$[T] = [T_a][T_b] = \begin{bmatrix} -186 & -17 \\ -56.25 & -5.125 \end{bmatrix}$$

We convert this to y-parameters. $\Delta_T = AD - BC = -3$.

$$\mathbf{[y]} = \begin{bmatrix} \mathbf{D/B} & \mathbf{-\Delta_T/B} \\ \mathbf{-1/B} & \mathbf{A/B} \end{bmatrix} = \begin{bmatrix} \mathbf{0.3015} & \mathbf{-0.1765} \\ \mathbf{0.0588} & \mathbf{10.94} \end{bmatrix}\mathbf{S}$$

(b) The equivalent z-parameters are

$$[z] = \begin{bmatrix} A/C & \Delta_T/C \\ 1/C & D/C \end{bmatrix} = \begin{bmatrix} 3.3067 & 0.0533 \\ -0.0178 & 0.0911 \end{bmatrix}$$

Consider the equivalent circuit below.

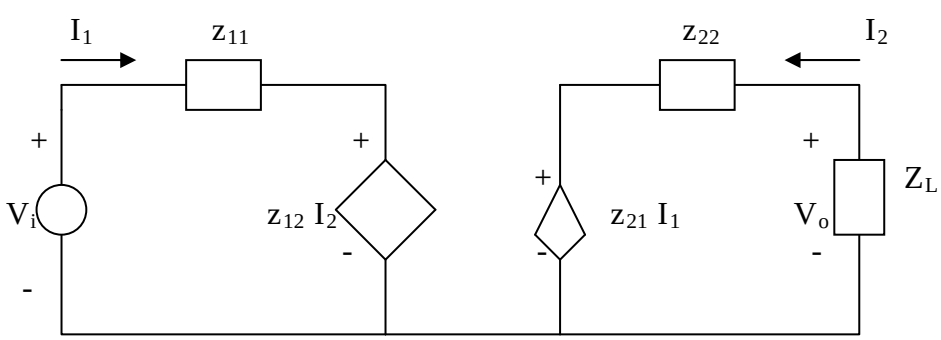

$$V_i = z_{11}I_1 + z_{12}I_2 \qquad (1)$$

www.konkur.in

$$V_o = z_{21}I_1 + z_{22}I_2 \qquad (2)$$

But $V_o = -I_2 Z_L \longrightarrow I_2 = -V_o / Z_L$ (3)

From (2) and (3) ,

$$V_o = z_{21}I_1 - z_{22}\frac{V_o}{Z_L} \longrightarrow I_1 = V_o\left(\frac{1}{z_{21}} + \frac{z_{22}}{Z_L z_{21}}\right) \qquad (4)$$

Substituting (3) and (4) into (1) gives

$$\frac{\mathbf{V_i}}{\mathbf{V_o}} = \left(\frac{\mathbf{z_{11}}}{\mathbf{z_{21}}} + \frac{\mathbf{z_{11}z_{22}}}{\mathbf{z_{21}Z_L}}\right) - \frac{\mathbf{z_{12}}}{\mathbf{Z_L}} = \mathbf{-194.3} \longrightarrow \underline{\frac{\mathbf{V_{o.}}}{\mathbf{V_i}} = \mathbf{-0.0051}}$$

www.konkur.in

Chapter 19, Solution 76.

To get z_{11} and z_{21}, we open circuit the output port and let $I_1 = 1A$ so that

$$z_{11} = \frac{V_1}{I_1} = V_1, \qquad z_{21} = \frac{V_2}{I_1} = V_2$$

The schematic is shown below. After it is saved and run, we obtain

$$z_{11} = V_1 = 3.849, \qquad z_{21} = V_2 = 1.122$$

Similarly, to get z_{22} and z_{12}, we open circuit the input port and let $I_2 = 1A$ so that

$$z_{12} = \frac{V_1}{I_2} = V_1, \qquad z_{22} = \frac{V_2}{I_2} = V_2$$

The schematic is shown below. After it is saved and run, we obtain

$$z_{12} = V_1 = 1.122, \qquad z_{22} = V_2 = 3.849$$

Thus,

$$\mathbf{[z]} = \begin{bmatrix} \mathbf{3.949} & \mathbf{1.122} \\ \mathbf{1.122} & \mathbf{3.849} \end{bmatrix} \Omega$$

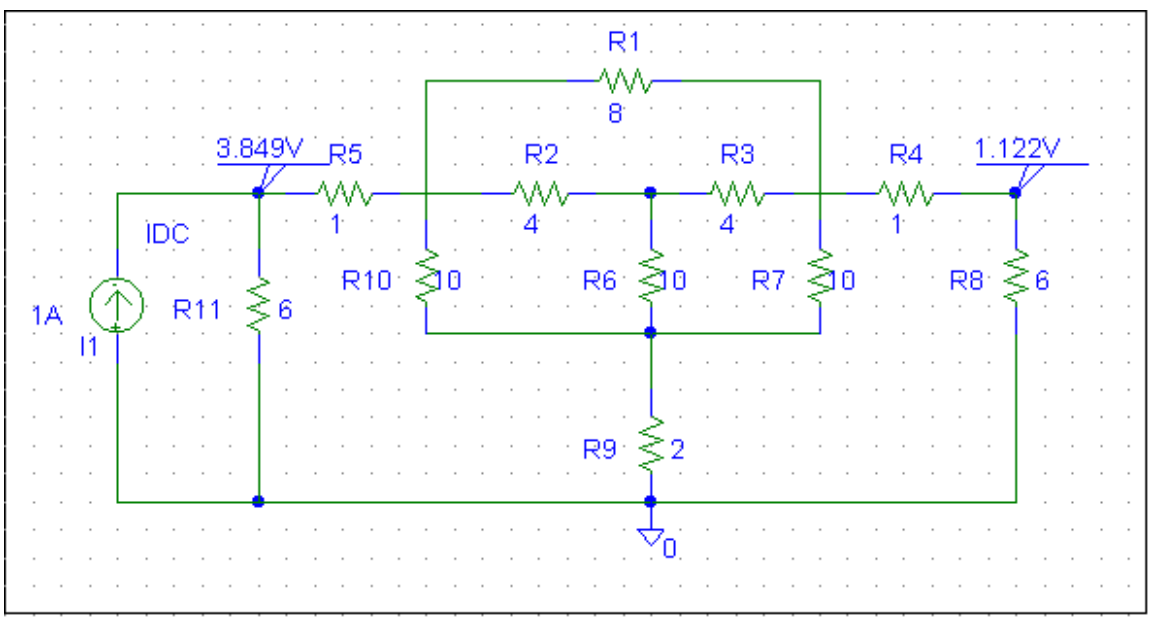

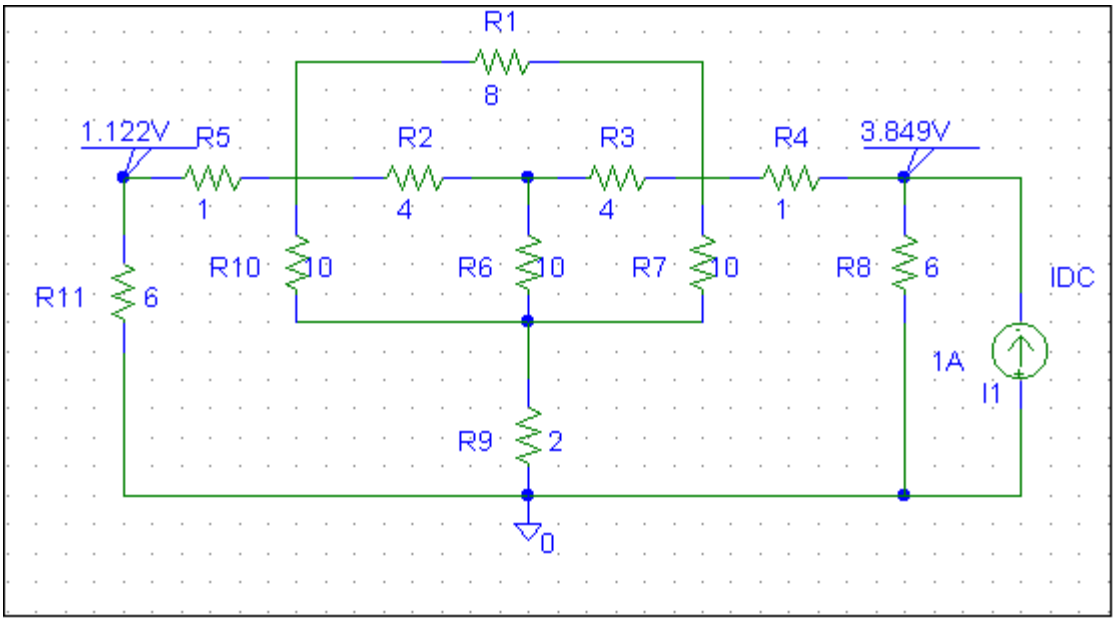
R1
8
1.122V
R5
1
R2
4
R3
4
R4
1
3.849V
R11
6
R10
10
R6
10
R7
10
R8
6
IDC
1A
I1
R9
2
0

www.konkur.in

Chapter 19, Solution 77.

We follow Example 19.15 except that this is an AC circuit.

(a) We set $V_2 = 0$ and $I_1 = 1$ A. The schematic is shown below. In the AC Sweep Box, set Total Pts = 1, Start Freq = 0.1592, and End Freq = 0.1592. After simulation, the output file includes

FREQ	IM(V_PRINT2)	IP(V_PRINT2)
1.592 E–01	3.163 E–.01	–1.616 E+02

FREQ	VM($N_0001)	VP($N_0001)
1.592 E–01	9.488 E–01	–1.616 E+02

From this we obtain

$$h_{11} = V_1/1 = 0.9488\angle{-161.6°}$$

$$h_{21} = I_2/1 = 0.3163\angle{-161.6°}.$$

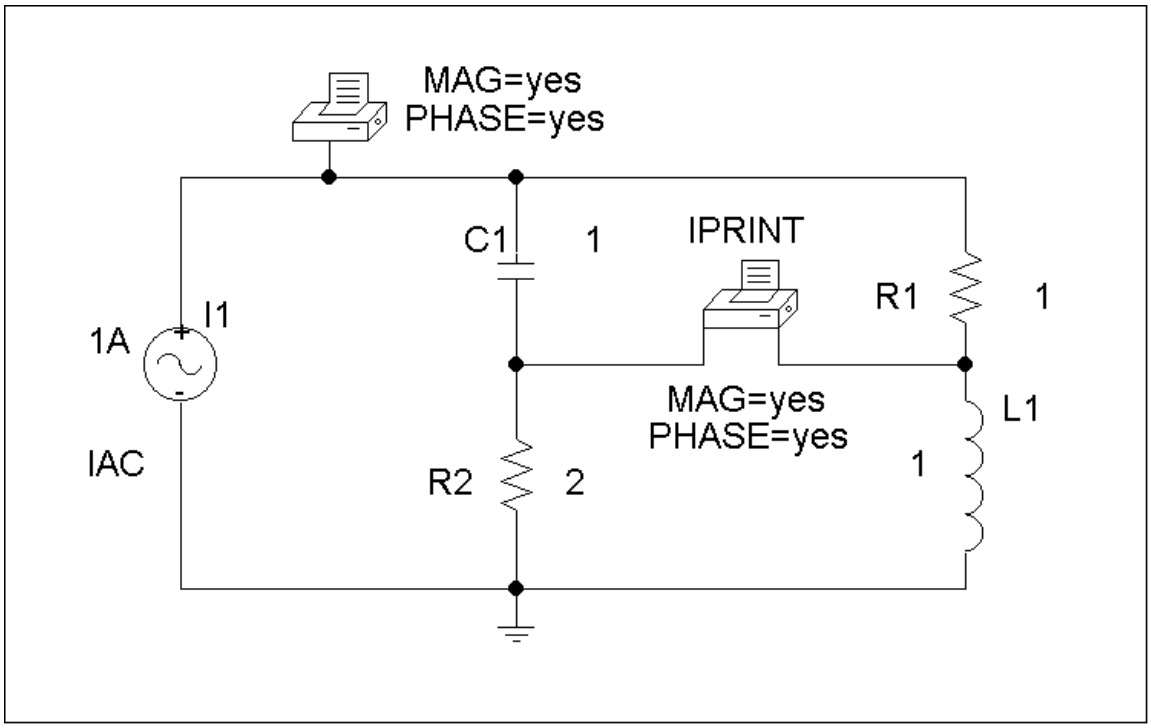

www.konkur.in

(b) In this case, we set $I_1 = 0$ and $V_2 = 1V$. The schematic is shown below. In the AC Sweep box, we set Total Pts = 1, Start Freq = 0.1592, and End Freq = 0.1592. After simulation, we obtain an output file which includes

FREQ	VM($N_0001)	VP($N_0001)
1.592 E–01	3.163 E–.01	1.842 E+01

FREQ	IM(V_PRINT2)	IP(V_PRINT2)
1.592 E–01	9.488 E–01	–1.616 E+02

From this,

$$h_{12} = V_1/1 = 0.3163\angle 18.42°$$

$$h_{21} = I_2/1 = 0.9488\angle -161.6°.$$

Thus,

$$[h] = \begin{bmatrix} \mathbf{0.9488\angle -161.6°\,\Omega} & \mathbf{0.3163\angle 18.42°} \\ \mathbf{0.3163\angle -161.6°} & \mathbf{0.9488\angle -161.6°\,S} \end{bmatrix}$$

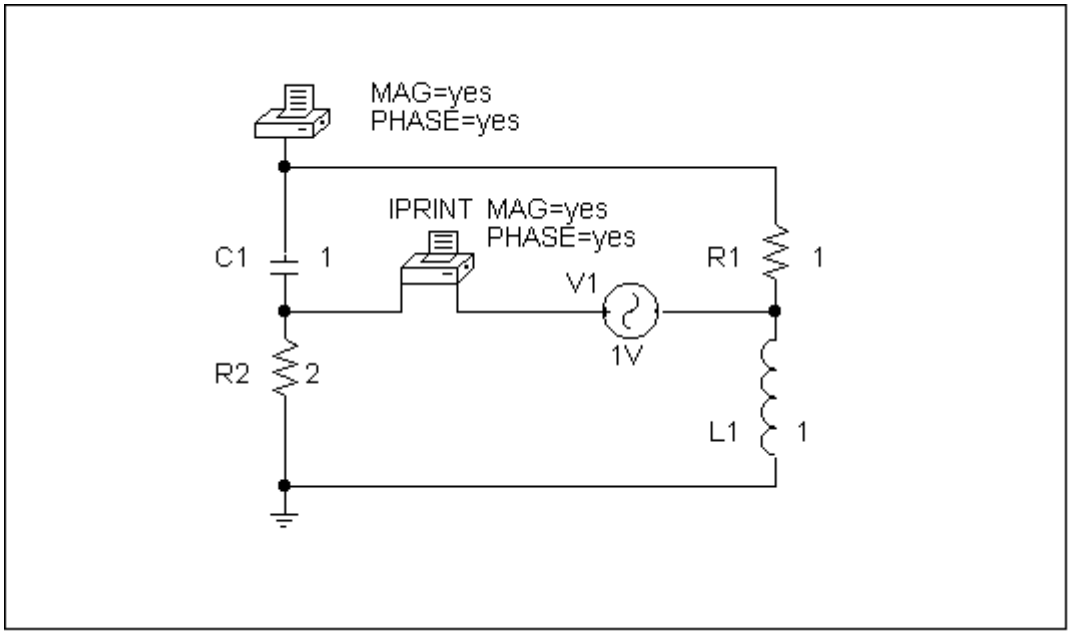

Chapter 19, Solution 78

For h_{11} and h_{21}, short-circuit the output port and let I_1 = 1A. $f = \omega / 2\pi = 0.6366$. The schematic is shown below. When it is saved and run, the output file contains the following:

```
FREQ         IM(V_PRINT1)IP(V_PRINT1)

   6.366E-01   1.202E+00   1.463E+02

  FREQ         VM($N_0003) VP($N_0003)

   6.366E-01   3.771E+00  -1.350E+02
```

From the output file, we obtain

$$I_2 = 1.202\angle 146.3^o, \qquad V_1 = 3.771\angle -135^o$$

so that

$$h_{11} = \frac{V_1}{1} = 3.771\angle -135^o, \qquad h_{21} = \frac{I_2}{1} = 1.202\angle 146.3^o$$

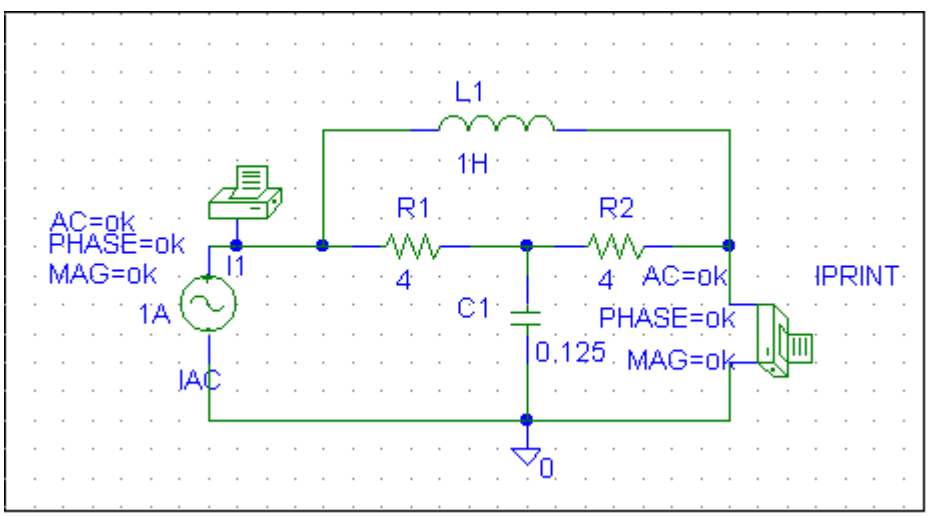

For h_{12} and h_{22}, open-circuit the input port and let V_2 = 1V. The schematic is shown below. When it is saved and run, the output file includes:

```
  FREQ         VM($N_0003) VP($N_0003)

   6.366E-01   1.202E+00  -3.369E+01
```

www.konkur.in

```
FREQ          IM(V_PRINT1)IP(V_PRINT1)

 6.366E-01    3.727E-01   -1.534E+02
```

From the output file, we obtain

$$I_2 = 0.3727\angle -153.4^o, \qquad V_1 = 1.202\angle -33.69^o$$

so that

$$h_{12} = \frac{V_1}{1} = 1.202\angle -33.69^o, \qquad h_{22} = \frac{I_2}{1} = 0.3727\angle -153.4^o$$

Thus,

$$\underline{\mathbf{[h]} = \begin{bmatrix} \mathbf{3.771\angle -135^o\ \Omega} & \mathbf{1.202\angle -33.69^o} \\ \mathbf{1.202\angle 146.3} & \mathbf{0.3727\angle -153.4^o\ S} \end{bmatrix}}$$

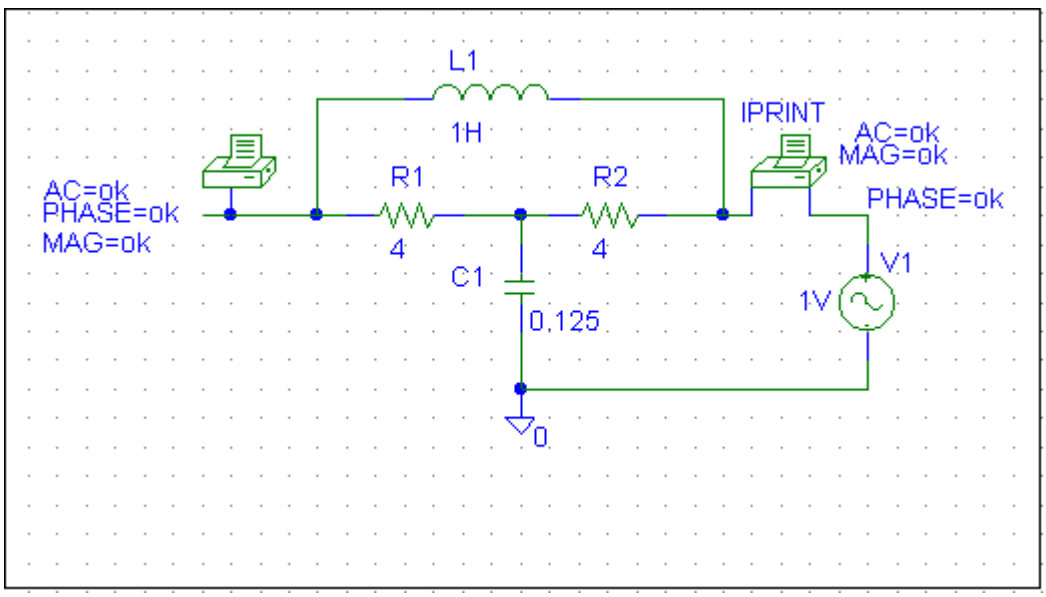

www.konkur.in

Chapter 19, Solution 79

We follow Example 19.16.

(a) We set $I_1 = 1$ A and open-circuit the output-port so that $I_2 = 0$. The schematic is shown below with two VPRINT1s to measure V_1 and V_2. In the AC Sweep box, we enter Total Pts = 1, Start Freq = 0.3183, and End Freq = 0.3183. After simulation, the output file includes

FREQ	VM(1)	VP(1)
3.183 E–01	4.669 E+00	–1.367 E+02

FREQ	VM(4)	VP(4)
3.183 E–01	2.530 E+00	–1.084 E+02

From this,

$$z_{11} = V_1/I_1 = 4.669\angle{-136.7°}/1 = 4.669\angle{-136.7°}$$

$$z_{21} = V_2/I_1 = 2.53\angle{-108.4°}/1 = 2.53\angle{-108.4°}.$$

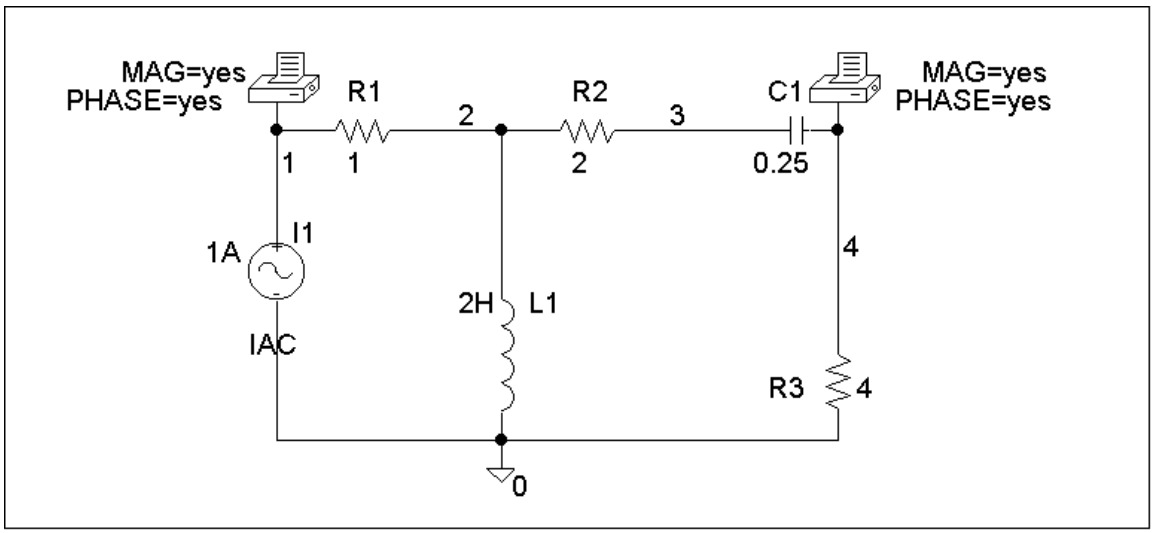

(b) In this case, we let $I_2 = 1$ A and open-circuit the input port. The schematic is shown below. In the AC Sweep box, we type Total Pts = 1, Start Freq = 0.3183, and End Freq = 0.3183. After simulation, the output file includes

www.konkur.in

FREQ	VM(1)	VP(1)
3.183 E–01	2.530 E+00	–1.084 E+02

FREQ	VM(2)	VP(2)
3.183 E–01	1.789 E+00	–1.534 E+02

From this,

$$z_{12} = V_1/I_2 = 2.53\angle{-108.4°}/1 = 2.53\angle{-108..4°}$$

$$z_{22} = V_2/I_2 = 1.789\angle{-153.4°}/1 = 1.789\angle{-153.4°}.$$

Thus,

$$[z] = \begin{bmatrix} \mathbf{4.669\angle-136.7°} & \mathbf{2.53\angle-108.4°} \\ \mathbf{2.53\angle-108.4°} & \mathbf{1.789\angle-153.4°} \end{bmatrix} \mathbf{\Omega}$$

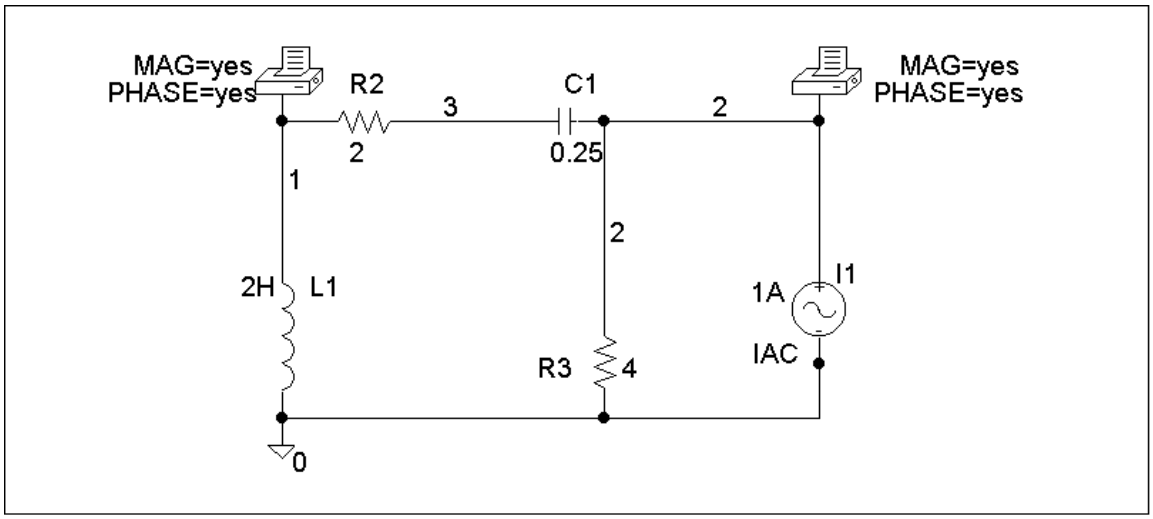

Chapter 19, Solution 80

To get z_{11} and z_{21}, we open circuit the output port and let $I_1 = 1A$ so that

$$z_{11} = \frac{V_1}{I_1} = V_1, \qquad z_{21} = \frac{V_2}{I_1} = V_2$$

The schematic is shown below. After it is saved and run, we obtain

$$z_{11} = V_1 = 29.88, \qquad z_{21} = V_2 = -70.37$$

Similarly, to get z_{22} and z_{12}, we open circuit the input port and let $I_2 = 1A$ so that

$$z_{12} = \frac{V_1}{I_2} = V_1, \qquad z_{22} = \frac{V_2}{I_2} = V_2$$

The schematic is shown below. After it is saved and run, we obtain

$$z_{12} = V_1 = 3.704, \qquad z_{22} = V_2 = 11.11$$

Thus,

$$[\mathbf{z}] = \begin{bmatrix} \mathbf{29.88} & \mathbf{3.704} \\ \mathbf{-70.37} & \mathbf{11.11} \end{bmatrix} \Omega$$

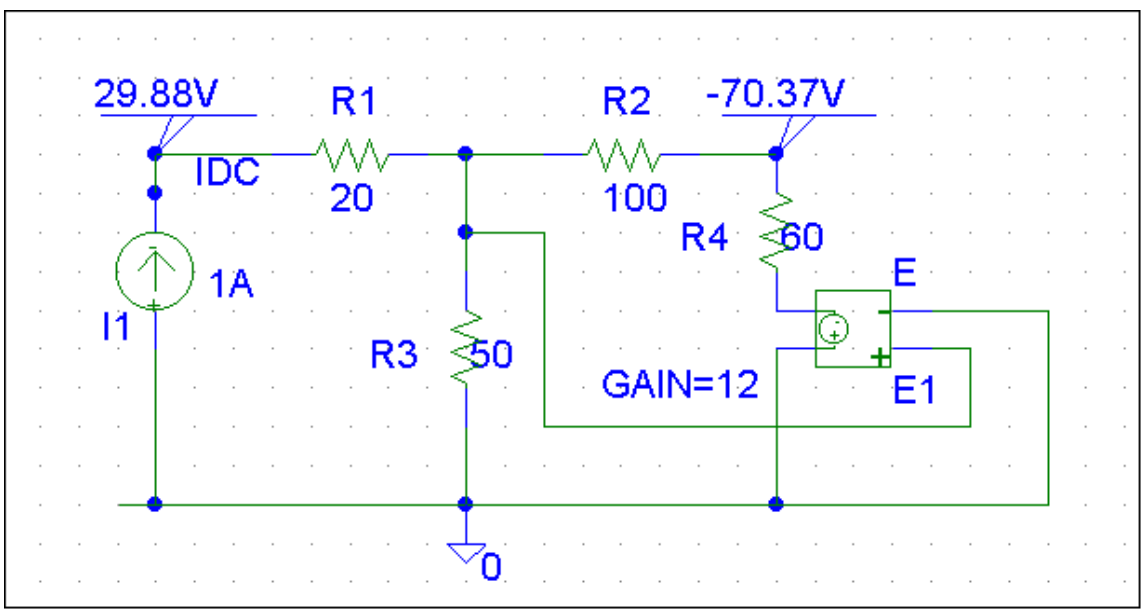

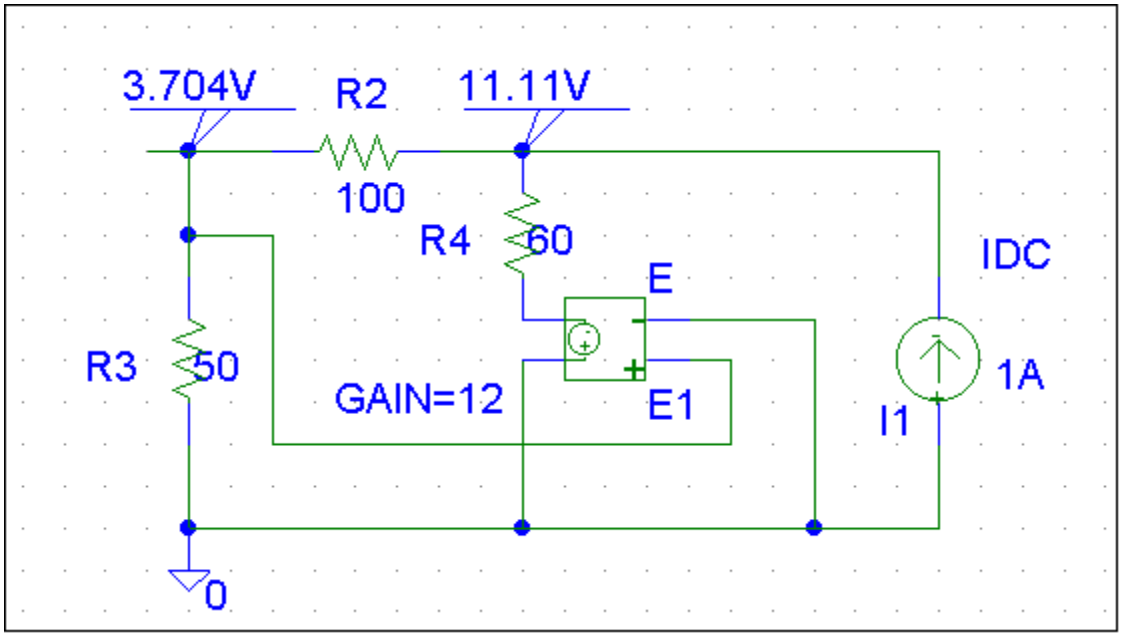
3.704V
R2
11.11V
100
R4
60
E
IDC
R3
50
GAIN=12
E1
1A
I1
0

www.konkur.in

Chapter 19, Solution 81

(a) We set $V_1 = 1$ and short circuit the output port. The schematic is shown below. After simulation we obtain

$$y_{11} = I_1 = 1.5, \; y_{21} = I_2 = 3.5$$

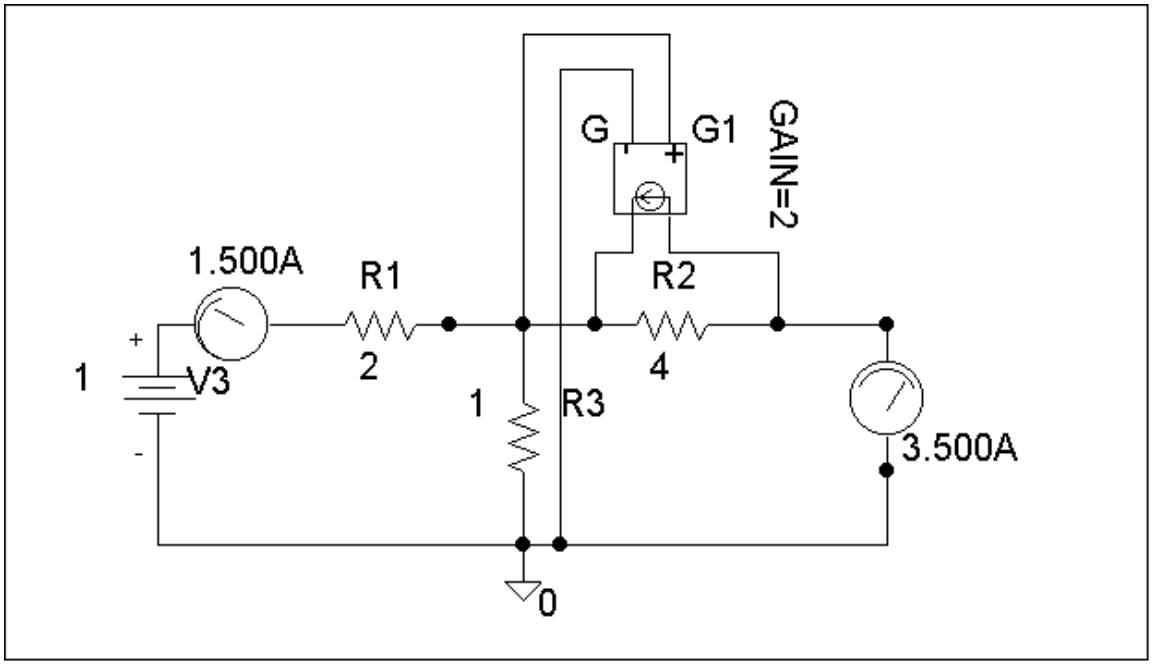

(b) We set $V_2 = 1$ and short-circuit the input port. The schematic is shown below. Upon simulating the circuit, we obtain

$$y_{12} = I_1 = -0.5, \; y_{22} = I_2 = 1.5$$

$$[Y] = \begin{bmatrix} \mathbf{1.5} & \mathbf{-0.5} \\ \mathbf{3.5} & \mathbf{1.5} \end{bmatrix} \mathbf{S}$$

www.konkur.in

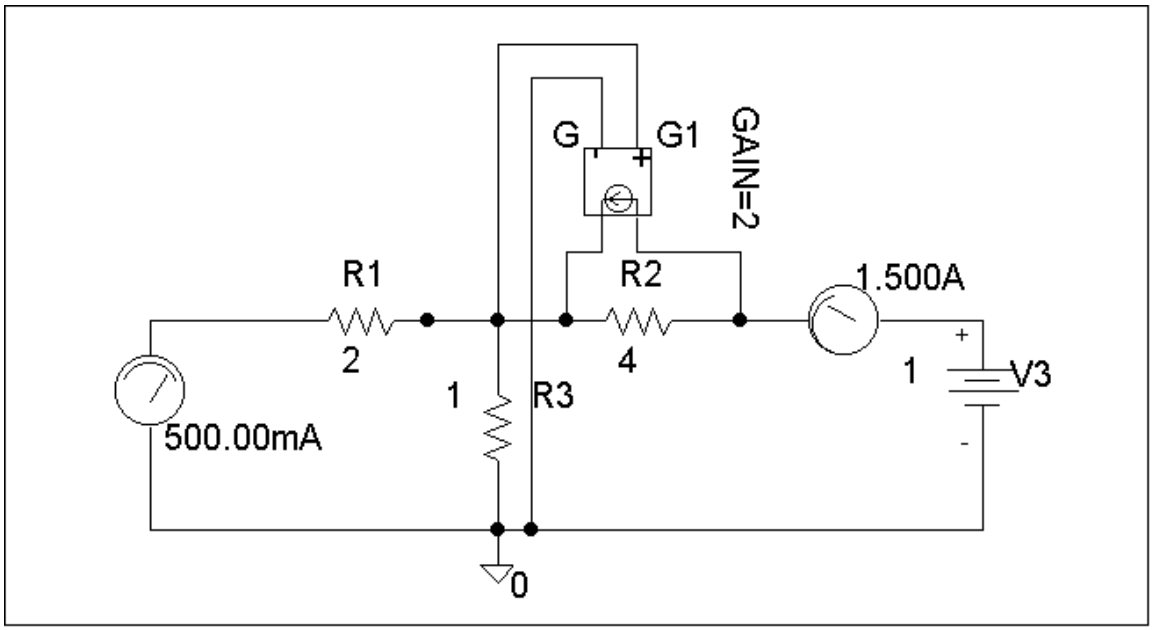

www.konkur.in

Chapter 19, Solution 82

We follow Example 19.15.

(a) Set $V_2 = 0$ and $I_1 = 1A$. The schematic is shown below. After simulation, we obtain

$$h_{11} = V_1/1 = 3.8, \; h_{21} = I_2/1 = 3.6$$

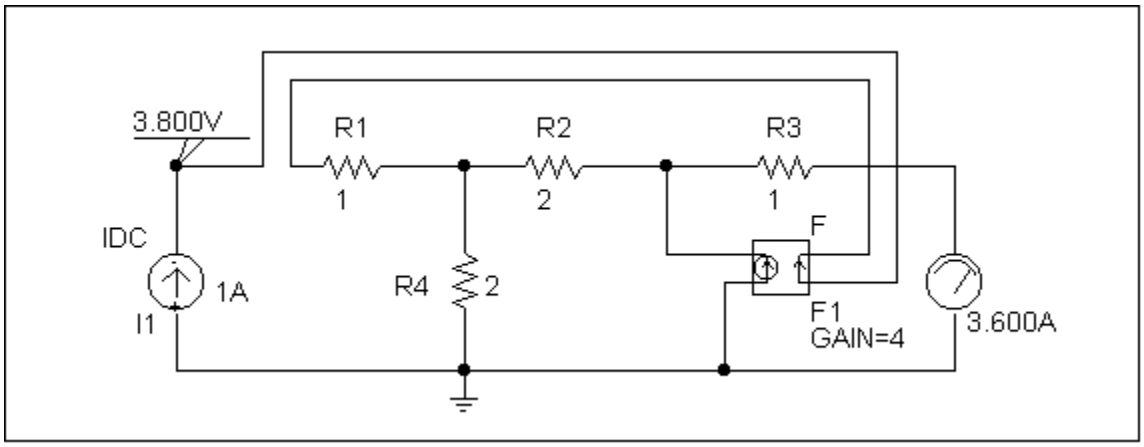

(b) Set $V_1 = 1$ V and $I_1 = 0$. The schematic is shown below. After simulation, we obtain

$$h_{12} = V_1/1 = 0.4, \; h_{22} = I_2/1 = 0.25$$

Hence, $$[h] = \begin{bmatrix} \mathbf{3.8\,\Omega} & \mathbf{0.4} \\ \mathbf{3.6} & \mathbf{0.25\,S} \end{bmatrix}$$

www.konkur.in

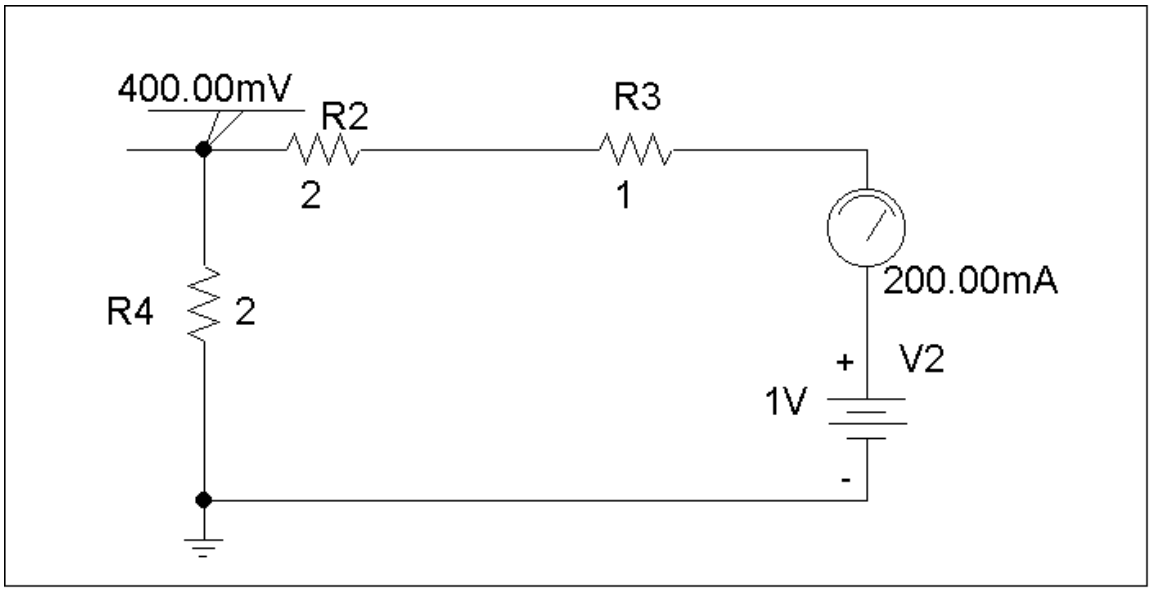

www.konkur.in

Chapter 19, Solution 83

To get A and C, we open-circuit the output and let $I_1 = 1A$. The schematic is shown below. When the circuit is saved and simulated, we obtain $V_1 = 11$ and $V_2 = 34$.

$$A = \frac{V_1}{V_2} = 0.3235, \qquad C = \frac{I_1}{V_2} = \frac{1}{34} = 0.02941$$

Similarly, to get B and D, we open-circuit the output and let $I_1 = 1A$. The schematic is shown below. When the circuit is saved and simulated, we obtain $V_1 = 2.5$ and $I_2 = -2.125$.

$$B = -\frac{V_1}{I_2} = \frac{2.5}{2.125} = 1.1765, \qquad D = -\frac{I_1}{I_2} = \frac{1}{2.125} = 0.4706$$

Thus,

$$\underline{\mathbf{[T]} = \begin{bmatrix} \mathbf{0.3235} & \mathbf{1.1765\,\Omega} \\ \mathbf{0.02941\,S} & \mathbf{0.4706} \end{bmatrix}}$$

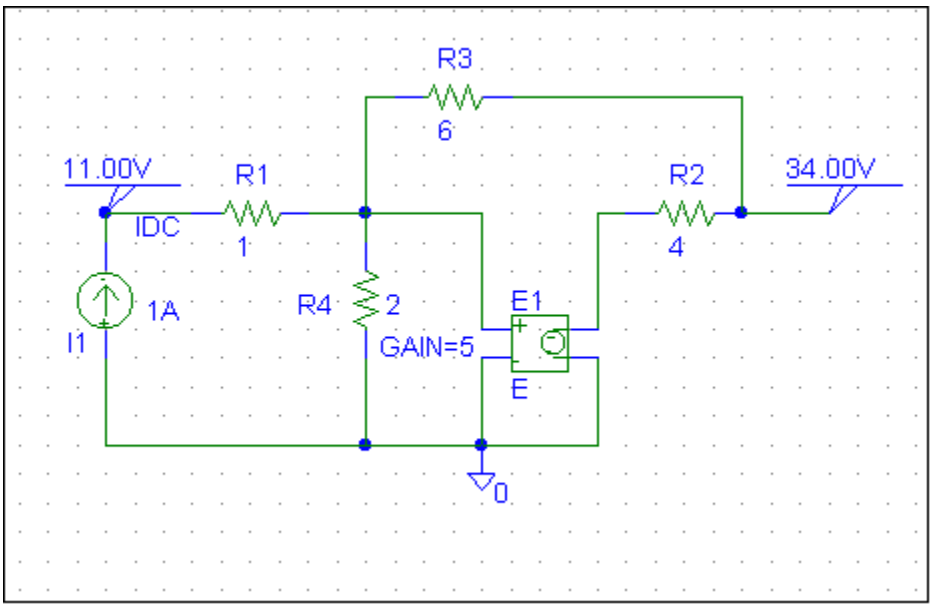
R3
6
11.00V
R1
IDC
1
R2
4
34.00V
1A
I1
R4
2
E1
GAIN=5
E
0

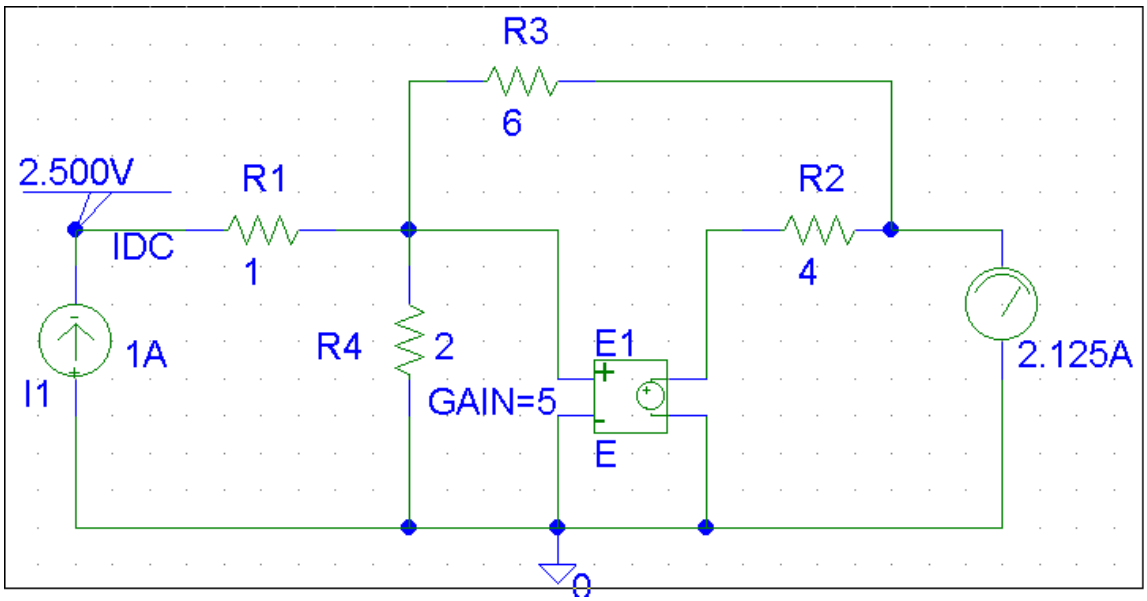
R3
6
2.500V
R1
IDC
1
R2
4
1A
I1
R4
2
E1
GAIN=5
E
2.125A
0

www.konkur.in

Chapter 19, Solution 84

(a) Since $A = \left.\frac{V_1}{V_2}\right|_{I_2=0}$ and $C = \left.\frac{I_1}{V_2}\right|_{I_2=0}$, we open-circuit the output port and let $V_1 = 1$ V. The schematic is as shown below. After simulation, we obtain

$$A = 1/V_2 = 1/0.7143 = 1.4$$

$$C = I_2/V_2 = 1.0/0.7143 = 1.4$$

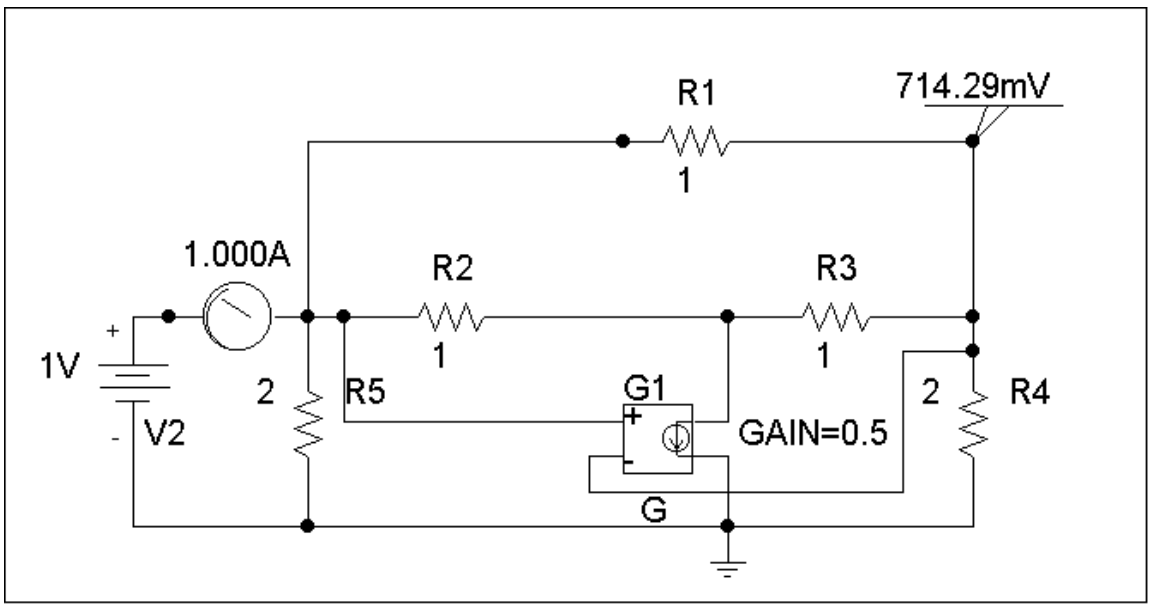

(b) To get B and D, we short-circuit the output port and let $V_1 = 1$. The schematic is shown below. After simulating the circuit, we obtain

$$B = -V_1/I_2 = -1/1.25 = -0.8$$

$$D = -I_1/I_2 = -2.25/1.25 = -1.8$$

Thus $$\begin{bmatrix} A & B \\ C & D \end{bmatrix} = \begin{bmatrix} \mathbf{1.4} & \mathbf{-0.8\Omega} \\ \mathbf{1.4S} & \mathbf{-1.8} \end{bmatrix}$$

www.konkur.in

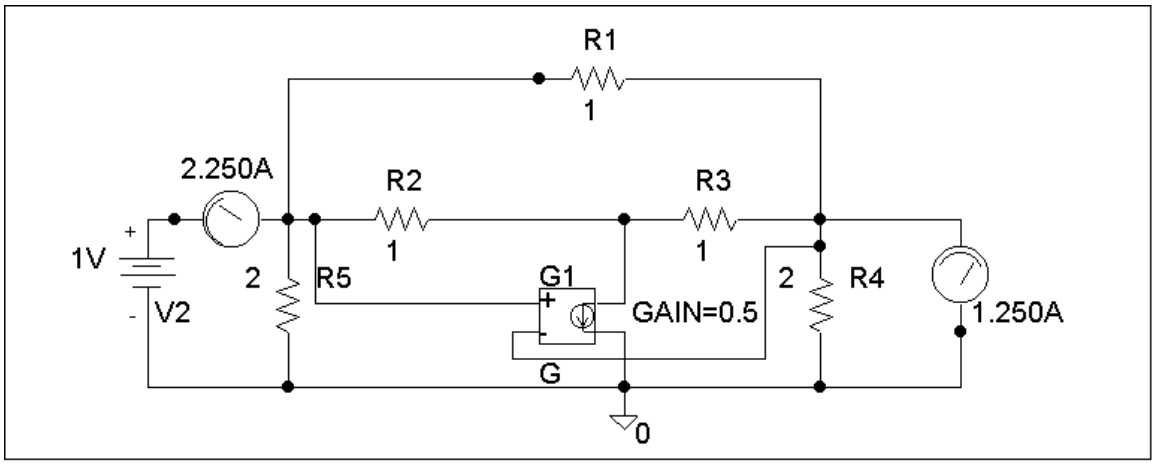

www.konkur.in

Chapter 19, Solution 85

(a) Since $A = \left.\frac{V_1}{V_2}\right|_{I_2=0}$ and $C = \left.\frac{I_1}{V_2}\right|_{I_2=0}$, we let $V_1 = 1$ V and open-circuit the output port. The schematic is shown below. In the AC Sweep box, we set Total Pts = 1, Start Freq = 0.1592, and End Freq = 0.1592. After simulation, we obtain an output file which includes

FREQ	IM(V_PRINT1)	IP(V_PRINT1)
1.592 E–01	6.325 E–01	1.843 E+01

FREQ	VM($N_0002)	VP($N_0002)
1.592 E–01	6.325 E–01	–7.159 E+01

From this, we obtain

$$A = \frac{1}{V_2} = \frac{1}{0.6325\angle -71.59^\circ} = 1.581\angle 71.59^\circ$$

$$C = \frac{I_1}{V_2} = \frac{0.6325\angle 18.43^\circ}{0.6325\angle -71.59^\circ} = 1\angle 90^\circ = j$$

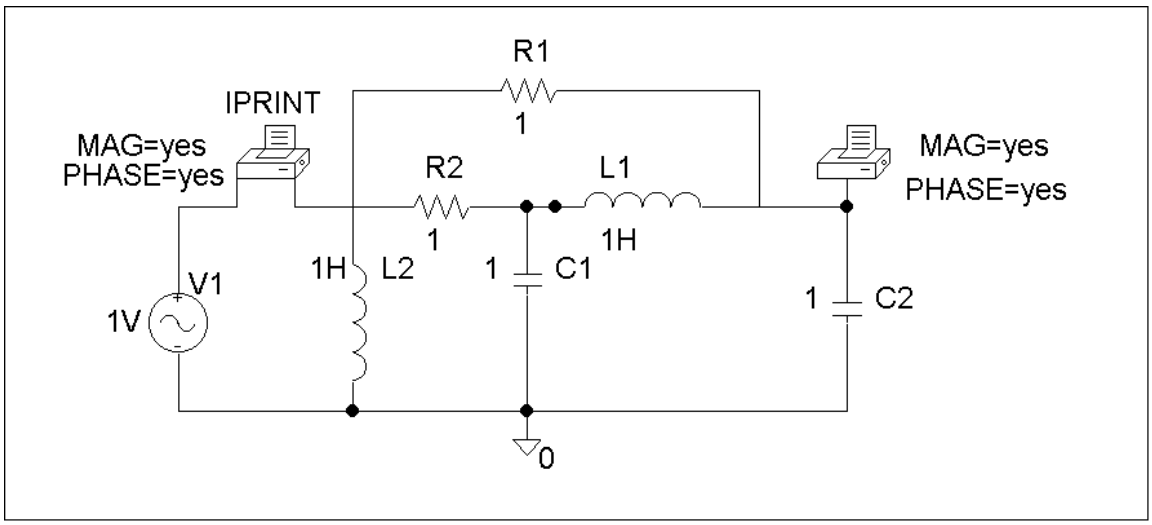

www.konkur.in

(b) Similarly, since $B = \left.\frac{V_1}{I_2}\right|_{V_2=0}$ and $D = -\left.\frac{I_1}{I_2}\right|_{V_2=0}$, we let $V_1 = 1$ V and short-circuit the output port. The schematic is shown below. Again, we set Total Pts = 1, Start Freq = 0.1592, and End Freq = 0.1592 in the AC Sweep box. After simulation, we get an output file which includes the following results:

FREQ	IM(V_PRINT1)	IP(V_PRINT1)
1.592 E–01	5.661 E–04	8.997 E+01

FREQ	IM(V_PRINT3)	IP(V_PRINT3)
1.592 E–01	9.997 E–01	–9.003 E+01

From this,

$$B = -\frac{1}{I_2} = -\frac{1}{0.9997\angle -90^\circ} = -1\angle 90^\circ = -j$$

$$D = -\frac{I_1}{I_2} = -\frac{5.661\text{x}10^{-4}\angle 89.97^\circ}{0.9997\angle -90^\circ} = 5.561\text{x}10^{-4}$$

$$\begin{bmatrix} A & B \\ C & D \end{bmatrix} = \begin{bmatrix} \mathbf{1.581\angle 71.59^\circ} & \mathbf{-j\Omega} \\ \mathbf{jS} & \mathbf{5.661\text{x}10^{-4}} \end{bmatrix}$$

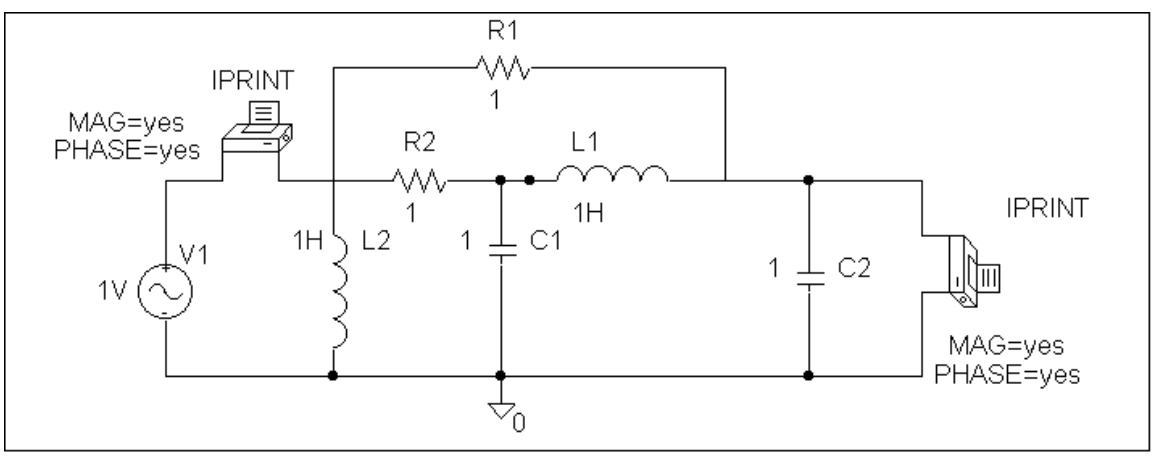

www.konkur.in

Chapter 19, Solution 86

(a) By definition, $g_{11} = \left.\frac{I_1}{V_1}\right|_{I_2=0}$, $g_{21} = \left.\frac{V_1}{V_2}\right|_{I_2=0}$.

We let $V_1 = 1$ V and open-circuit the output port. The schematic is shown below. After simulation, we obtain

$$g_{11} = I_1 = 2.7$$

$$g_{21} = V_2 = 0.0$$

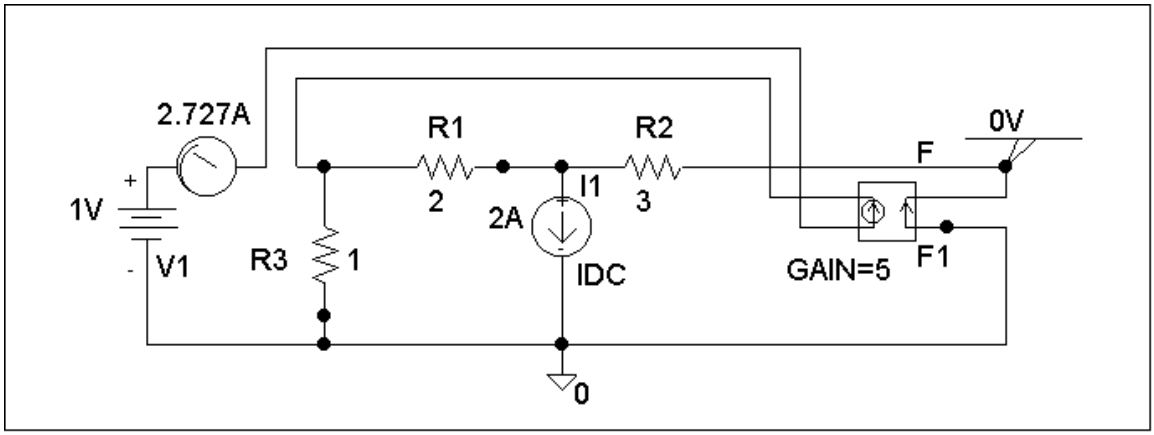

(b) Similarly,

$$g_{12} = \left.\frac{I_1}{I_2}\right|_{V_1=0}, \quad g_{22} = \left.\frac{V_2}{I_2}\right|_{V_1=0}$$

We let $I_2 = 1$ A and short-circuit the input port. The schematic is shown below. After simulation,

$$g_{12} = I_1 = 0$$

$$g_{22} = V_2 = 0$$

Thus $$[g] = \begin{bmatrix} \mathbf{2.727S} & \mathbf{0} \\ \mathbf{0} & \mathbf{0} \end{bmatrix}$$

www.konkur.in

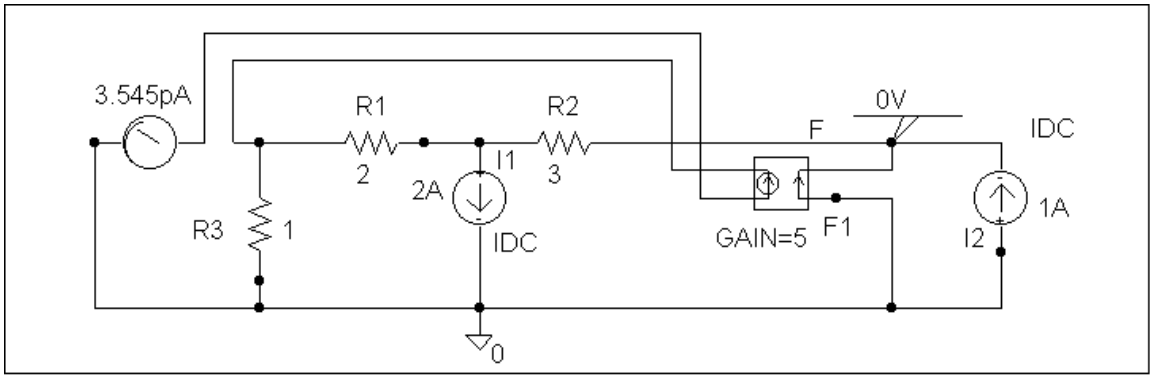

www.konkur.in

Chapter 19, Solution 87

(a) Since $a = \left.\frac{V_2}{V_1}\right|_{I_1=0}$ and $c = \left.\frac{I_2}{V_1}\right|_{I_1=0}$,

we open-circuit the input port and let $V_2 = 1$ V. The schematic is shown below. In the AC Sweep box, set Total Pts = 1, Start Freq = 0.1592, and End Freq = 0.1592. After simulation, we obtain an output file which includes

FREQ	IM(V_PRINT2)	IP(V_PRINT2)
1.592 E–01	5.000 E–01	1.800 E+02

FREQ	VM($N_0001)	VP($N_0001)
1.592 E–01	5.664 E–04	8.997 E+01

From this,

$$a = \frac{1}{5.664\text{x}10^{-4}\angle 89.97°} = 1765\angle -89.97°$$

$$c = \frac{0.5\angle 180°}{5.664\text{x}10^{-4}\angle 89.97°} = -882.28\angle -89.97°$$

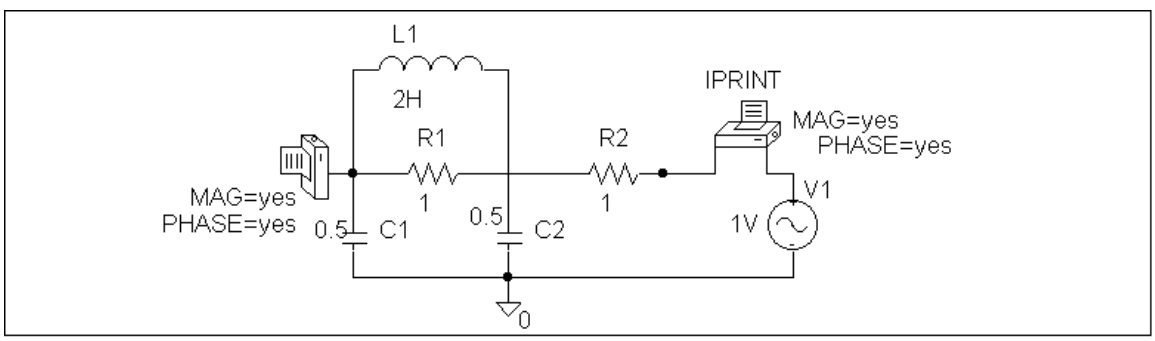

(b) Similarly,

$$b = -\left.\frac{V_2}{I_1}\right|_{V_1=0} \quad \text{and} \quad d = -\left.\frac{I_2}{I_1}\right|_{V_1=0}$$

We short-circuit the input port and let $V_2 = 1$ V. The schematic is shown below. After simulation, we obtain an output file which includes

FREQ	IM(V_PRINT2)	IP(V_PRINT2)

www.konkur.in

1.592 E–01	5.000 E–01	1.800 E+02

FREQ	IM(V_PRINT3)	IP(V_PRINT3)
1.592 E–01	5.664 E–04	–9.010 E+01

From this, we get

$$b = -\frac{1}{5.664\text{x}10^{-4}\angle -90.1^\circ} = -j1765$$

$$d = -\frac{0.5\angle 180^\circ}{5.664\text{x}10^{-4}\angle -90.1^\circ} = j888.28$$

Thus

$$\mathbf{[t]} = \begin{bmatrix} \mathbf{-j1765} & \mathbf{-j1765\,\Omega} \\ \mathbf{j888.2\,S} & \mathbf{j888.2} \end{bmatrix}$$

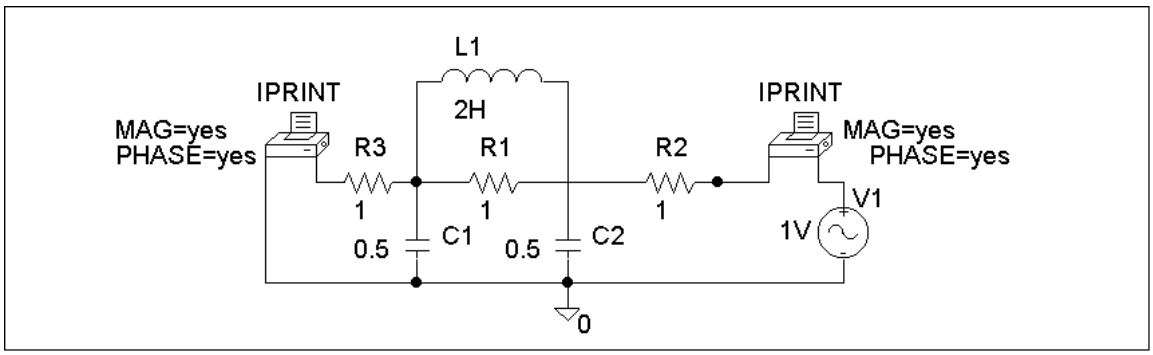

Chapter 19, Solution 88

To get Z_{in}, consider the network in Fig. (a).

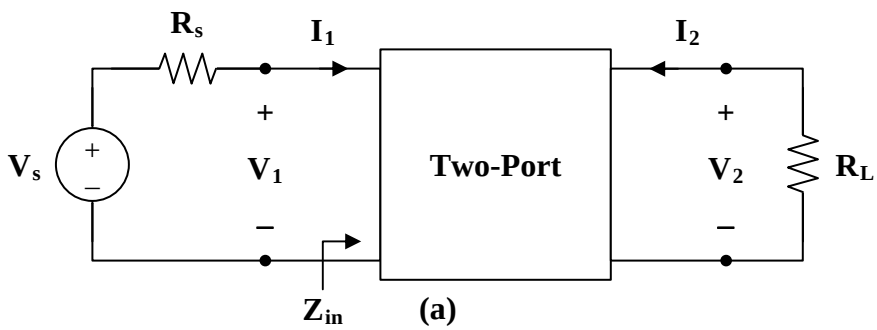

(a)

$$\mathbf{I}_1 = \mathbf{y}_{11}\mathbf{V}_1 + \mathbf{y}_{12}\mathbf{V}_2 \qquad (1)$$
$$\mathbf{I}_2 = \mathbf{y}_{21}\mathbf{V}_1 + \mathbf{y}_{22}\mathbf{V}_2 \qquad (2)$$

But
$$\mathbf{I}_2 = \frac{-\mathbf{V}_2}{R_L} = \mathbf{y}_{21}\mathbf{V}_1 + \mathbf{y}_{22}\mathbf{V}_2$$
$$\mathbf{V}_2 = \frac{-\mathbf{y}_{21}\mathbf{V}_1}{\mathbf{y}_{22} + 1/R_L} \qquad (3)$$

Substituting (3) into (1) yields

$$\mathbf{I}_1 = \mathbf{y}_{11}\mathbf{V}_1 + \mathbf{y}_{12}\cdot\left(\frac{-\mathbf{y}_{21}\mathbf{V}_1}{\mathbf{y}_{22} + 1/R_L}\right), \qquad \mathbf{Y}_L = \frac{1}{R_L}$$
$$\mathbf{I}_1 = \left(\frac{\Delta_y + \mathbf{y}_{11}\mathbf{Y}_L}{\mathbf{y}_{22} + \mathbf{Y}_L}\right)\mathbf{V}_1, \qquad \Delta_y = \mathbf{y}_{11}\mathbf{y}_{22} - \mathbf{y}_{12}\mathbf{y}_{21}$$

or
$$Z_{in} = \frac{\mathbf{V}_1}{\mathbf{I}_1} = \frac{\mathbf{y}_{22} + \mathbf{Y}_L}{\Delta_y + \mathbf{y}_{11}\mathbf{Y}_L}$$

$$A_i = \frac{\mathbf{I}_2}{\mathbf{I}_1} = \frac{\mathbf{y}_{21}\mathbf{V}_1 + \mathbf{y}_{22}\mathbf{V}_2}{\mathbf{I}_1} = \mathbf{y}_{21}Z_{in} + \left(\frac{\mathbf{y}_{22}}{\mathbf{I}_1}\right)\left(\frac{-\mathbf{y}_{21}\mathbf{V}_1}{\mathbf{y}_{22} + \mathbf{Y}_L}\right)$$
$$= \mathbf{y}_{21}Z_{in} - \frac{\mathbf{y}_{22}\mathbf{y}_{21}Z_{in}}{\mathbf{y}_{22} + \mathbf{Y}_L} = \left(\frac{\mathbf{y}_{22} + \mathbf{Y}_L}{\Delta_y + \mathbf{y}_{11}\mathbf{Y}_L}\right)\left(\mathbf{y}_{21} - \frac{\mathbf{y}_{22}\mathbf{y}_{21}}{\mathbf{y}_{22} + \mathbf{Y}_L}\right)$$

$$A_i = \frac{\mathbf{y}_{21}\mathbf{Y}_L}{\Delta_y + \mathbf{y}_{11}\mathbf{Y}_L}$$

From (3),

www.konkur.in

$$A_v = \frac{\mathbf{V}_2}{\mathbf{V}_1} = \frac{-\mathbf{y}_{21}}{\mathbf{y}_{22} + \mathbf{Y}_L}$$

To get Z_{out}, consider the circuit in Fig. (b).

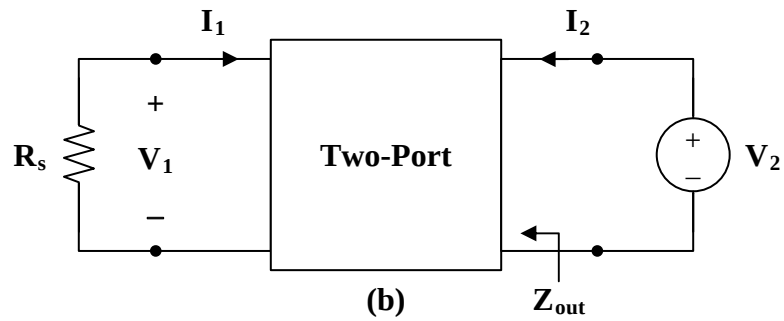

(b)

$$Z_{out} = \frac{\mathbf{V}_2}{\mathbf{I}_2} = \frac{\mathbf{V}_2}{\mathbf{y}_{21}\mathbf{V}_1 + \mathbf{y}_{22}\mathbf{V}_2} \qquad (4)$$

But $\qquad \mathbf{V}_1 = -R_s \mathbf{I}_1$

Substituting this into (1) yields

$$\mathbf{I}_1 = -\mathbf{y}_{11} R_s \mathbf{I}_1 + \mathbf{y}_{12}\mathbf{V}_2$$

$$(1 + \mathbf{y}_{11} R_s)\mathbf{I}_1 = \mathbf{y}_{12}\mathbf{V}_2$$

$$\mathbf{I}_1 = \frac{\mathbf{y}_{12}\mathbf{V}_2}{1 + \mathbf{y}_{11} R_s} = \frac{-\mathbf{V}_1}{R_s}$$

or $\qquad \dfrac{\mathbf{V}_1}{\mathbf{V}_2} = \dfrac{-\mathbf{y}_{12} R_s}{1 + \mathbf{y}_{11} R_s}$

Substituting this into (4) gives

$$Z_{out} = \frac{1}{\mathbf{y}_{22} - \dfrac{\mathbf{y}_{12}\mathbf{y}_{21} R_s}{1 + \mathbf{y}_{11} R_s}}$$

$$= \frac{1 + \mathbf{y}_{11} R_s}{\mathbf{y}_{22} + \mathbf{y}_{11}\mathbf{y}_{22} R_s - \mathbf{y}_{21}\mathbf{y}_{22} R_s}$$

$$Z_{out} = \frac{\mathbf{y}_{11} + \mathbf{Y}_s}{\Delta_y + \mathbf{y}_{22}\mathbf{Y}_s}$$

www.konkur.in

Chapter 19, Solution 89

$$A_v = \frac{-h_{fe} R_L}{h_{ie} + (h_{ie} h_{oe} - h_{re} h_{fe}) R_L}$$

$$A_v = \frac{-72 \cdot 10^5}{2640 + (2640 \times 16 \times 10^{-6} - 2.6 \times 10^{-4} \times 72) \cdot 10^5}$$

$$A_v = \frac{-72 \cdot 10^5}{2640 + 1824} = \mathbf{-1613}$$

$$\text{dc gain} = 20 \log \left| A_v \right| = 20 \log (1613) = \mathbf{64.15\ dB}$$

www.konkur.in

Chapter 19, Solution 90

(a) $$Z_{in} = h_{ie} - \frac{h_{re}\, h_{fe}\, R_L}{1 + h_{oe}\, R_L}$$

$$1500 = 2000 - \frac{10^{-4} \times 120\, R_L}{1 + 20 \times 10^{-6}\, R_L}$$

$$500 = \frac{12 \times 10^{-3}}{1 + 2 \times 10^{-5}\, R_L}$$

$$500 + 10^{-2}\, R_L = 12 \times 10^{-3}\, R_L$$

$$500 \times 10^{2} = 0.2\, R_L$$

$$R_L = \mathbf{250\ k\Omega}$$

(b) $$A_v = \frac{-h_{fe} R_L}{h_{ie} + (h_{ie}\, h_{oe} - h_{re}\, h_{fe}) R_L}$$

$$A_v = \frac{-120 \times 250 \times 10^{3}}{2000 + (2000 \times 20 \times 10^{-6} - 120 \times 10^{-4}) \times 250 \times 10^{3}}$$

$$A_v = \frac{-30 \times 10^{6}}{2 \times 10^{3} + 7 \times 10^{3}} = \mathbf{-3333}$$

$$A_i = \frac{h_{fe}}{1 + h_{oe}\, R_L} = \frac{120}{1 + 20 \times 10^{-6} \times 250 \times 10^{3}} = \mathbf{20}$$

$$Z_{out} = \frac{R_s + h_{ie}}{(R_s + h_{ie})\, h_{oe} - h_{re}\, h_{fe}} = \frac{600 + 2000}{(600 + 2000) \times 20 \times 10^{-6} - 10^{-4} \times 120}$$

$$Z_{out} = \frac{2600}{40}\ k\Omega = \mathbf{65\ k\Omega}$$

(c) $$A_v = \frac{\mathbf{V}_c}{\mathbf{V}_b} = \frac{\mathbf{V}_c}{\mathbf{V}_s} \longrightarrow \mathbf{V}_c = A_v \mathbf{V}_s = -3333 \times 4 \times 10^{-3} = \mathbf{-13.33\ V}$$

www.konkur.in

Chapter 19, Solution 91

$$R_s = 1.2\ k\Omega, \qquad R_L = 4\ k\Omega$$

(a) $$\mathbf{A_t = \frac{-h_{fe} R_L}{h_{ie} + (h_{ie} h_{oe} - h_{re} h_{fe}) R_L}}$$

$$\mathbf{A_t = \frac{-80 \times 4 \times 10^3}{1200 + (1200 \times 20 \times 10^{-6} - 1.5 \times 10^{-4} \times 80) \times 4 \times 10^3}}$$

$$\mathbf{A_t = \frac{-32000}{1248} = -25.64}$$ This is just the gain for the transistor. If we calculate the gain for the circuit we get $A_t = V_o/V_{be}$ and $V_{be} = V_s[1.2k/(1.2k+2k)] = 0.375$, thus, $\mathbf{V_A} = (0.375)(-25.64) = \mathbf{-9.615.}$

(b) $$A_i = \frac{h_{fe}}{1 + h_{oe} R_L} = \frac{80}{1 + 20 \times 10^{-6} \times 4 \times 10^3} = \mathbf{74.07}$$

(c) $$Z_{in} = h_{ie} - h_{re} A_i$$

$$Z_{in} = 1200 - 1.5 \times 10^{-4} \times 74.074 \cong \mathbf{1.2\ k\Omega}$$

(d) $$Z_{out} = \frac{R_s + h_{ie}}{(R_s + h_{ie}) h_{oe} - h_{re} h_{fe}}$$

$$Z_{out} = \frac{1200 + 1200}{2400 \times 20 \times 10^{-6} - 1.5 \times 10^{-4} \times 80} = \frac{2400}{0.0468} = \mathbf{51.28\ k\Omega}$$

(a) –25.64 for the transistor and –9.615 for the circuit, (b) 74.07, (c) 1.2 kΩ, (d) 51.28 kΩ

Chapter 19, Solution 92

Due to the resistor $R_E = 240\,\Omega$, we cannot use the formulas in section 18.9.1. We will need to derive our own. Consider the circuit in Fig. (a).

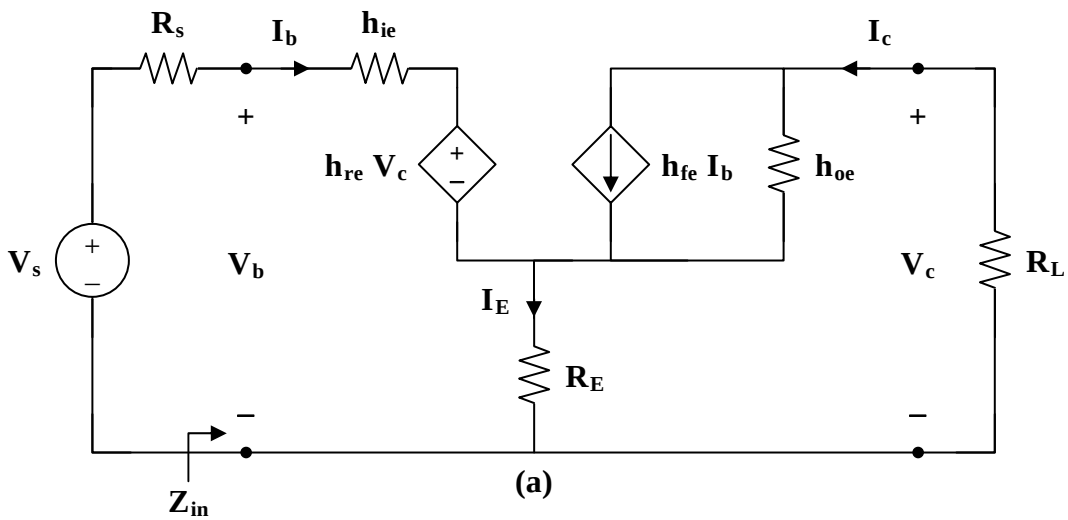

(a)

$$\mathbf{I}_E = \mathbf{I}_b + \mathbf{I}_c \qquad (1)$$

$$\mathbf{V}_b = h_{ie}\,\mathbf{I}_b + h_{re}\,\mathbf{V}_c + (\mathbf{I}_b + \mathbf{I}_c)R_E \qquad (2)$$

$$\mathbf{I}_c = h_{fe}\,\mathbf{I}_b + \frac{\mathbf{V}_c}{R_E + 1/h_{oe}} \qquad (3)$$

But $$\mathbf{V}_c = -\mathbf{I}_c R_L \qquad (4)$$

Substituting (4) into (3),

$$\mathbf{I}_c = h_{fe}\,\mathbf{I}_b - \frac{R_L}{R_E + 1/h_{oe}}\mathbf{I}_c$$

or $$A_i = \frac{\mathbf{I}_c}{\mathbf{I}_b} = \frac{h_{fe}(1 + R_E h_{oe})}{1 + h_{oe}(R_L} \qquad (5)$$

$$A_i = \frac{100(1 + 240\text{x}30\text{x}10^{-6})}{1 + 30\times10^{-6}(4{,}000 + 240)}$$

$$A_i = \underline{\mathbf{79.18}}$$

From (3) and (5),

www.konkur.in

$$\mathbf{I}_c = \frac{h_{fe}(1+R_E)h_{oe}}{1+h_{oe}(R_L+R_E)}\mathbf{I}_b = h_{fe}\mathbf{I}_b + \frac{\mathbf{V}_c}{R_E + 1/h_{oe}} \qquad (6)$$

Substituting (4) and (6) into (2),

$$\mathbf{V}_b = (h_{ie}+R_E)\mathbf{I}_b + h_{re}\mathbf{V}_c + \mathbf{I}_c R_E$$

$$\mathbf{V}_b = \frac{\mathbf{V}_c(h_{ie}+R_E)}{\left(R_E+\frac{1}{h_{oe}}\right)\left[\frac{h_{fe}(1+R_E h_{oe})}{1+h_{oe}(R_L+R_E)} - h_{fe}\right]} + h_{re}\mathbf{V}_c - \frac{\mathbf{V}_c}{R_L}R_E$$

$$\frac{1}{A_v} = \frac{\mathbf{V}_b}{\mathbf{V}_c} = \frac{(h_{ie}+R_E)}{\left(R_E+\frac{1}{h_{oe}}\right)\left[\frac{h_{fe}(1+R_E h_{oe})}{1+h_{oe}(R_L+R_E)} - h_{fe}\right]} + h_{re} - \frac{R_E}{R_L} \qquad (7)$$

$$\frac{1}{A_v} = \frac{(4000+240)}{\left(240+\frac{1}{30x10^{-6}}\right)\left[\frac{100(1+240x30x10^{-6})}{1+30\times10^{-6}\times4240} - 100\right]} + 10^{-4} - \frac{240}{4000}$$

$$\frac{1}{A_v} = -6.06x10^{-3} + 10^{-4} - 0.06 = -0.066$$

$$A_v = \mathbf{-15.15}$$

From (5),

$$\mathbf{I}_c = \frac{h_{fe}}{1+h_{oe}R_L}\mathbf{I}_b$$

We substitute this with (4) into (2) to get

$$\mathbf{V}_b = (h_{ie}+R_E)\mathbf{I}_b + (R_E - h_{re}R_L)\mathbf{I}_c$$

$$\mathbf{V}_b = (h_{ie}+R_E)\mathbf{I}_b + (R_E - h_{re}R_L)\left(\frac{h_{fe}(1+R_E h_{oe})}{1+h_{oe}(R_L+R_E)}\mathbf{I}_b\right)$$

$$Z_{in} = \frac{\mathbf{V}_b}{\mathbf{I}_b} = h_{ie} + R_E + \frac{h_{fe}(R_E - h_{re}R_L)(1+R_E h_{oe})}{1+h_{oe}(R_L+R_E)}$$

(8)

$$Z_{in} = 4000 + 240 + \frac{(100)(240\times10^{-4}\times4\times10^{3})(1+240x30x10^{-6})}{1+30\times10^{-6}\times4240}$$

$$Z_{in} = \mathbf{12.818\ k\Omega}$$

To obtain Z_{out}, which is the same as the Thevenin impedance at the output, we introduce a 1-V source as shown in Fig. (b).

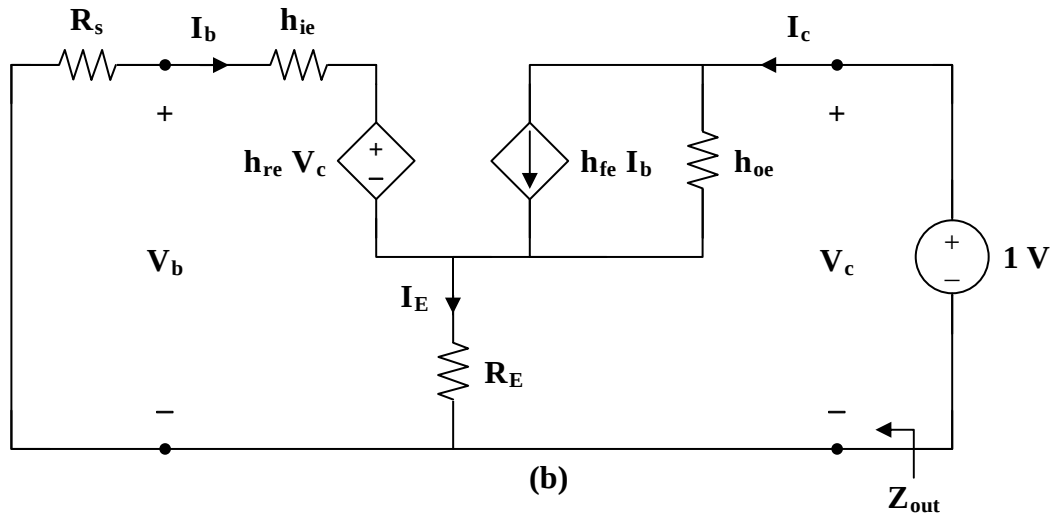

(b)

From the input loop,

$$\mathbf{I}_b(R_s + h_{ie}) + h_{re}\mathbf{V}_c + R_E(\mathbf{I}_b + \mathbf{I}_c) = 0$$

But $\mathbf{V}_c = 1$

So,

$$\mathbf{I}_b(R_s + h_{ie} + R_E) + h_{re} + R_E\mathbf{I}_c = 0 \qquad (9)$$

From the output loop,

$$\mathbf{I}_c = \frac{\mathbf{V}_c}{R_E + \frac{1}{h_{oe}}} + h_{fe}\mathbf{I}_b = \frac{h_{oe}}{R_E h_{oe} + 1} + h_{fe}\mathbf{I}_b$$

or

$$\mathbf{I}_b = \frac{\mathbf{I}_c}{h_{fe}} - \frac{h_{oe}/h_{fe}}{1 + R_E h_{oe}} \qquad (10)$$

Substituting (10) into (9) gives

$$(R_s + R_E + h_{ie})\left(\frac{\mathbf{I}_c}{h_{fe}}\right) + h_{re} + R_E\mathbf{I}_c - \frac{(R_s + R_E + h_{ie})\left(h_{oe}/h_{fe}\right)}{1 + R_E h_{oe}} = 0$$

$$\frac{R_s + R_E + h_{ie}}{h_{fe}}\mathbf{I}_c + R_E\mathbf{I}_c = \frac{R_s + R_E + h_{ie}}{1 + R_E h_{oe}}\left(\frac{h_{oe}}{h_{fe}}\right) - h_{re}$$

www.konkur.in

$$\mathbf{I}_c = \frac{(h_{oe}/h_{fe})\left[\dfrac{R_s + R_E + h_{ie}}{1 + R_E h_{oe}}\right] - h_{re}}{R_E + (R_s + R_E + h_{ie})/h_{fe}}$$

$$Z_{out} = \frac{1}{\mathbf{I}_c} = \frac{R_E\, h_{fe} + R_s + R_E + h_{ie}}{\left[\dfrac{R_s + R_E + h_{ie}}{1 + R_E h_{oe}}\right] h_{oe} - h_{re}\, h_{fe}}$$

$$Z_{out} = \frac{240 \times 100 + (1200 + 240 + 4000)}{\left[\dfrac{1200 + 240 + 4000}{1 + 240\text{x}30\text{x}10^{-6}}\right] \times 30 \times 10^{-6} - 10^{-4} \times 100}$$

$$Z_{out} = \frac{24000 + 5440}{0.152} = \mathbf{193.7\ k\Omega}$$

www.konkur.in

Chapter 19, Solution 93

We apply the same formulas derived in the previous problem.

$$\frac{1}{A_v} = \frac{(h_{ie} + R_E)}{\left(R_E + \frac{1}{h_{oe}}\right)\left[\frac{h_{fe}(1 + R_E h_{oe})}{1 + h_{oe}(R_L + R_E)} - h_{fe}\right]} + h_{re} - \frac{R_E}{R_L}$$

$$\frac{1}{A_v} = \frac{(2000 + 200)}{(200 + 10^5)\left[\frac{150(1 + 0.002)}{1 + 0.04} - 150\right]} + 2.5 \times 10^{-4} - \frac{200}{3800}$$

$$\frac{1}{A_v} = -0.004 + 2.5 \times 10^{-4} - 0.05263 = -0.05638$$

$$A_v = \mathbf{-17.74}$$

$$A_i = \frac{h_{fe}(1 + R_E h_{oe})}{1 + h_{oe}(R_L + R_E)} = \frac{150(1 + 200x10^{-5})}{1 + 10^{-5} \times (200 + 3800)} = \mathbf{144.5}$$

$$Z_{in} = h_{ie} + R_E + \frac{h_{fe}(R_E - h_{re} R_L)(1 + R_E h_{oe})}{1 + h_{oe}(R_L + R_E)}$$

$$Z_{in} = 2000 + 200 + \frac{(150)(200 - 2.5 \times 10^{-4} \times 3.8 \times 10^3)(1.002)}{1.04}$$

$$Z_{in} = 2200 + 28966$$

$$Z_{in} = \mathbf{31.17\ k\Omega}$$

$$Z_{out} = \frac{R_E h_{fe} + R_s + R_E + h_{ie}}{\left[\frac{R_s + R_E + h_{ie}}{1 + R_E h_{oe}}\right] h_{oe} - h_{re} h_{fe}}$$

$$Z_{out} = \frac{200 \times 150 + 1000 + 200 + 2000}{\left[\frac{3200 \times 10^{-5}}{1.002}\right] - 2.5 \times 10^{-4} \times 150} = \frac{33200}{-0.0055}$$

$$Z_{out} = \mathbf{-6.148\ M\Omega}$$

www.konkur.in

Chapter 19, Solution 94

We first obtain the **ABCD** parameters.

Given $[\mathbf{h}] = \begin{bmatrix} 200 & 0 \\ 100 & 10^{-6} \end{bmatrix}$, $\Delta_h = \mathbf{h}_{11}\mathbf{h}_{22} - \mathbf{h}_{12}\mathbf{h}_{21} = 2\times 10^{-4}$

$$[\mathbf{T}] = \begin{bmatrix} \dfrac{\Delta_h}{\mathbf{h}_{21}} & \dfrac{-\mathbf{h}_{11}}{\mathbf{h}_{21}} \\ \dfrac{-\mathbf{h}_{22}}{\mathbf{h}_{21}} & \dfrac{-1}{\mathbf{h}_{21}} \end{bmatrix} = \begin{bmatrix} -2\times 10^{-6} & -2 \\ -10^{-8} & -10^{-2} \end{bmatrix}$$

The overall **ABCD** parameters for the amplifier are

$$[\mathbf{T}] = \begin{bmatrix} -2\times 10^{-6} & -2 \\ -10^{-8} & -10^{-2} \end{bmatrix}\begin{bmatrix} -2\times 10^{-6} & -2 \\ -10^{-8} & -10^{-2} \end{bmatrix} \cong \begin{bmatrix} 2\times 10^{-8} & 2\times 10^{-2} \\ 10^{-10} & 10^{-4} \end{bmatrix}$$

$$\Delta_T = 2\times 10^{-12} - 2\times 10^{-12} = 0$$

$$[\mathbf{h}] = \begin{bmatrix} \dfrac{\mathbf{B}}{\mathbf{D}} & \dfrac{\Delta_T}{\mathbf{D}} \\ \dfrac{-1}{\mathbf{D}} & \dfrac{\mathbf{C}}{\mathbf{D}} \end{bmatrix} = \begin{bmatrix} 200 & 0 \\ -10^{4} & 10^{-6} \end{bmatrix}$$

Thus, $h_{ie} = 200$, $h_{re} = 0$, $h_{fe} = -10^{4}$, $h_{oe} = 10^{-6}$

$$A_v = \frac{(10^4)(4\times 10^3)}{200 + (2\times 10^{-4} - 0)\times 4\times 10^3} = \mathbf{2\times 10^5}$$

$$Z_{in} = h_{ie} - \frac{h_{re}\,h_{fe}\,R_L}{1 + h_{oe}\,R_L} = 200 - 0 = \mathbf{200\ \Omega}$$

www.konkur.in

Chapter 19, Solution 95

Let $\mathbf{Z}_A = \dfrac{1}{\mathbf{y}_{22}} = \dfrac{s^4 + 10s^2 + 8}{s^3 + 5s}$

Using long division,

$$\mathbf{Z}_A = s + \frac{5s^2 + 8}{s^3 + 5s} = sL_1 + \mathbf{Z}_B$$

i.e. $L_1 = 1\,\text{H}$ and $\mathbf{Z}_B = \dfrac{5s^2 + 8}{s^3 + 5s}$

as shown in Fig (a).

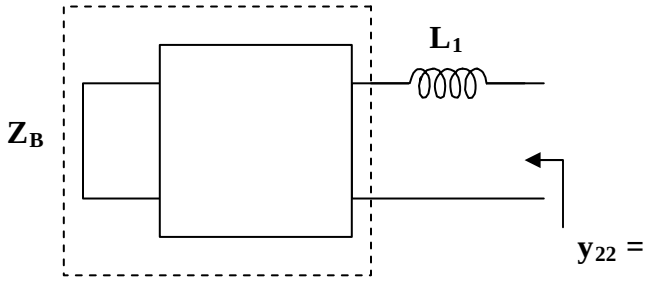

(a)

$$\mathbf{Y}_B = \frac{1}{\mathbf{Z}_B} = \frac{s^3 + 5s}{5s^2 + 8}$$

Using long division,

$$\mathbf{Y}_B = 0.2s + \frac{3.4s}{5s^2 + 8} = sC_2 + \mathbf{Y}_C$$

where $C_2 = 0.2\,\text{F}$ and $\mathbf{Y}_C = \dfrac{3.4s}{5s^2 + 8}$

as shown in Fig. (b).

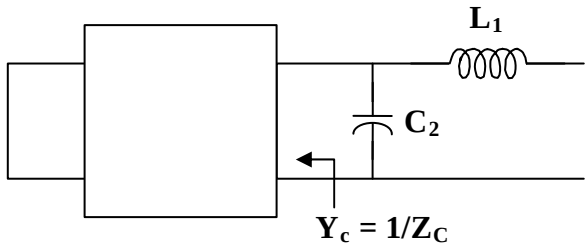

(b)

www.konkur.in

$$\mathbf{Z}_C = \frac{1}{\mathbf{Y}_C} = \frac{5s^2 + 8}{3.4s} = \frac{5s}{3.4} + \frac{8}{3.4s} = s\,L_3 + \frac{1}{s\,C_4}$$

i.e. an inductor in series with a capacitor

$$L_3 = \frac{5}{3.4} = 1.471\ \text{H} \quad \text{and} \quad C_4 = \frac{3.4}{8} = 0.425\ \text{F}$$

Thus, **the LC network is shown in Fig. (c)**.

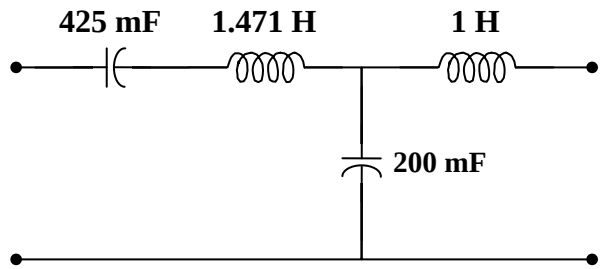

(c)

www.konkur.in

Chapter 19, Solution 96

This is a fourth order network which can be realized with the network shown in Fig. (a).

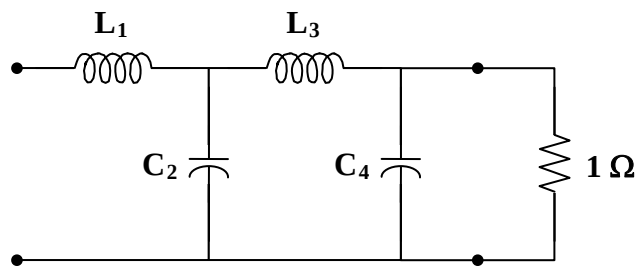

(a)

$$\Delta(s) = (s^4 + 3.414s^2 + 1) + (2.613s^3 + 2.613s)$$

$$H(s) = \frac{\dfrac{1}{2.613s^3 + 2.613s}}{1 + \dfrac{s^4 + 3.414s^2 + 1}{2.613s^3 + 2.613s}}$$

which indicates that

$$\mathbf{y}_{21} = \frac{-1}{2.613s^3 + 2.613s}$$

$$\mathbf{y}_{22} = \frac{s^4 + 3.414s + 1}{2.613s^3 + 2.613s}$$

We seek to realize $\mathbf{y}_{22}$. By long division,

$$\mathbf{y}_{22} = 0.383s + \frac{2.414s^2 + 1}{2.613s^3 + 2.613s} = sC_4 + \mathbf{Y}_A$$

i.e. $\quad C_4 = 0.383\text{ F} \quad$ and $\quad \mathbf{Y}_A = \dfrac{2.414s^2 + 1}{2.613s^3 + 2.613s}$

as shown in Fig. (b).

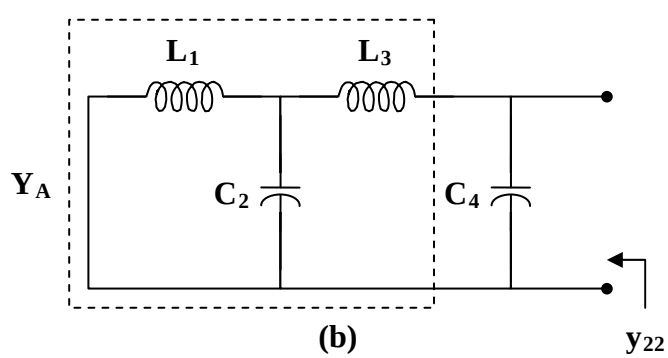

(b)

$$\mathbf{Z}_A = \frac{1}{\mathbf{Y}_A} = \frac{2.613s^3 + 2.613s}{2.414s^2 + 1}$$

By long division,

$$\mathbf{Z}_A = 1.082s + \frac{1.531s}{2.414s^2 + 1} = s\,L_3 + \mathbf{Z}_B$$

i.e. $L_3 = 1.082\ \text{H}$ and $\mathbf{Z}_B = \dfrac{1.531s}{2.414s^2 + 1}$

as shown in Fig.(c).

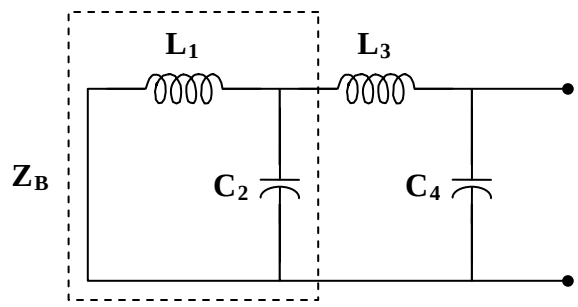

(c)

$$\mathbf{Y}_B = \frac{1}{\mathbf{Z}_B} = 1.577s + \frac{1}{1.531s} = s\,C_2 + \frac{1}{s\,L_1}$$

i.e. $C_2 = 1.577\ \text{F}$ and $L_1 = 1.531\ \text{H}$

Thus, **the network is shown in Fig. (d)**.

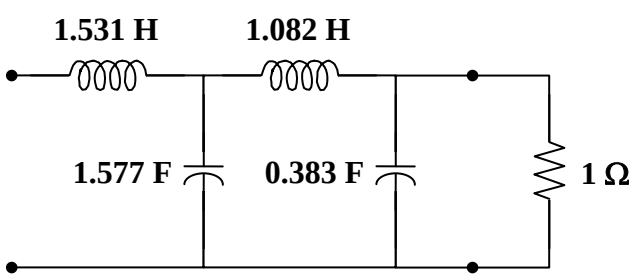

(d)

www.konkur.in

Chapter 19, Solution 97

$$H(s) = \frac{s^3}{(s^3+12s)+(6s^2+24)} = \frac{\dfrac{s^3}{s^3+12s}}{1+\dfrac{6s^2+24}{s^3+12s}}$$

Hence,

$$\mathbf{y}_{22} = \frac{6s^2+24}{s^3+12s} = \frac{1}{sC_3} + \mathbf{Z}_A \qquad (1)$$

where $\mathbf{Z}_A$ is shown in the figure below.

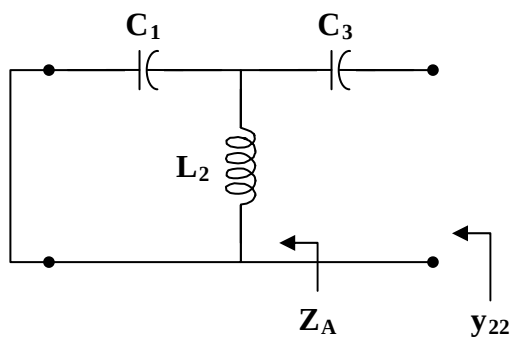

We now obtain C_3 and $\mathbf{Z}_A$ using partial fraction expansion.

Let
$$\frac{6s^2+24}{s(s^2+12)} = \frac{A}{s} + \frac{Bs+C}{s^2+12}$$
$$6s^2+24 = A(s^2+12) + Bs^2 + Cs$$

Equating coefficients :

s^0: $\quad 24 = 12A \longrightarrow A = 2$

s^1: $\quad 0 = C$

s^2: $\quad 6 = A + B \longrightarrow B = 4$

Thus,

$$\frac{6s^2+24}{s(s^2+12)} = \frac{2}{s} + \frac{4s}{s^2+12} \qquad (2)$$

www.konkur.in

Comparing (1) and (2),

$$C_3 = \frac{1}{A} = \frac{1}{2}\,F$$

$$\frac{1}{\mathbf{Z}_A} = \frac{s^2 + 12}{4s} = \frac{1}{4}s + \frac{3}{s} \qquad (3)$$

But

$$\frac{1}{\mathbf{Z}_A} = sC_1 + \frac{1}{s\,L_2} \qquad (4)$$

Comparing (3) and (4),

$$C_1 = \frac{1}{4}\,F \qquad \text{and} \qquad L_2 = \frac{1}{3}\,H$$

Therefore,

$$C_1 = \mathbf{250\ mF}, \qquad L_2 = \mathbf{333.3\ mH}, \qquad C_3 = \mathbf{500\ mF}$$

www.konkur.in

Chapter 19, Solution 98

$$\Delta_h = 1 - 0.8 = 0.2$$

$$[T_a] = [T_b] = \begin{bmatrix} -\Delta_h / h_{21} & -h_{11}/h_{21} \\ -h_{22}/h_{21} & -1/h_{21} \end{bmatrix} = \begin{bmatrix} -0.001 & -10 \\ -2.5\text{x}10^{-6} & -0.005 \end{bmatrix}$$

$$[T] = [T_a][T_b] = \begin{bmatrix} 2.6\text{x}10^{-5} & 0.06 \\ 1.5\text{x}10^{-8} & 5\text{x}10^{-5} \end{bmatrix}$$

We now convert this to z-parameters

$$[z] = \begin{bmatrix} A/C & \Delta_T / C \\ 1/C & D/C \end{bmatrix} = \begin{bmatrix} 1.733\text{x}10^{3} & 0.0267 \\ 6.667\text{x}10^{7} & 3.33\text{x}10^{3} \end{bmatrix}$$

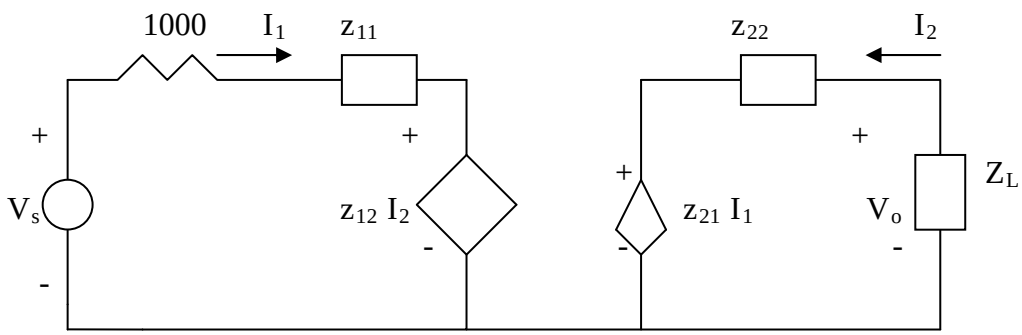

$$V_s = (1000 + z_{11})I_1 + z_{12}I_2 \qquad (1)$$

$$V_o = z_{22}I_2 + z_{21}I_1 \qquad (2)$$

But $V_o = -I_2 Z_L \longrightarrow I_2 = -V_o / Z_L$ (3)

Substituting (3) into (2) gives

$$I_1 = V_o\left(\frac{1}{z_{21}} + \frac{z_{22}}{z_{21}Z_L}\right) \qquad (4)$$

We substitute (3) and (4) into (1)

www.konkur.in

$$V_s = (1000 + z_{11})\left(\frac{1}{z_{11}} + \frac{z_{22}}{z_{21}Z_L}\right)V_o - \frac{z_{12}}{Z_L}V_o$$

$$= 7.653x10^{-4} - 2.136x10^{-5} = \underline{744\mu V}$$

www.konkur.in

Chapter 19, Solution 99

$$\mathbf{Z}_{ab} = \mathbf{Z}_1 + \mathbf{Z}_3 = \mathbf{Z}_c \parallel (\mathbf{Z}_b + \mathbf{Z}_a)$$

$$\mathbf{Z}_1 + \mathbf{Z}_3 = \frac{\mathbf{Z}_c(\mathbf{Z}_a + \mathbf{Z}_b)}{\mathbf{Z}_a + \mathbf{Z}_b + \mathbf{Z}_c} \tag{1}$$

$$\mathbf{Z}_{cd} = \mathbf{Z}_2 + \mathbf{Z}_3 = \mathbf{Z}_a \parallel (\mathbf{Z}_b + \mathbf{Z}_c)$$

$$\mathbf{Z}_2 + \mathbf{Z}_3 = \frac{\mathbf{Z}_a(\mathbf{Z}_b + \mathbf{Z}_c)}{\mathbf{Z}_a + \mathbf{Z}_b + \mathbf{Z}_c} \tag{2}$$

$$\mathbf{Z}_{ac} = \mathbf{Z}_1 + \mathbf{Z}_2 = \mathbf{Z}_b \parallel (\mathbf{Z}_a + \mathbf{Z}_c)$$

$$\mathbf{Z}_1 + \mathbf{Z}_2 = \frac{\mathbf{Z}_b(\mathbf{Z}_a + \mathbf{Z}_c)}{\mathbf{Z}_a + \mathbf{Z}_b + \mathbf{Z}_c} \tag{3}$$

Subtracting (2) from (1),

$$\mathbf{Z}_1 - \mathbf{Z}_2 = \frac{\mathbf{Z}_b(\mathbf{Z}_c - \mathbf{Z}_a)}{\mathbf{Z}_a + \mathbf{Z}_b + \mathbf{Z}_c} \tag{4}$$

Adding (3) and (4),

$$\mathbf{Z}_1 = \underline{\frac{\mathbf{Z_b Z_c}}{\mathbf{Z_a + Z_b + Z_c}}} \tag{5}$$

Subtracting (5) from (3),

$$\mathbf{Z}_2 = \frac{\mathbf{Z_a Z_b}}{\mathbf{Z_a + Z_b + Z_c}} \tag{6}$$

Subtracting (5) from (1),

$$\mathbf{Z}_3 = \frac{\mathbf{Z_c Z_a}}{\mathbf{Z_a + Z_b + Z_c}} \tag{7}$$

Using (5) to (7)

$$\mathbf{Z}_1\mathbf{Z}_2 + \mathbf{Z}_2\mathbf{Z}_3 + \mathbf{Z}_3\mathbf{Z}_1 = \frac{\mathbf{Z}_a\mathbf{Z}_b\mathbf{Z}_c(\mathbf{Z}_a + \mathbf{Z}_b + \mathbf{Z}_c)}{(\mathbf{Z}_a + \mathbf{Z}_b + \mathbf{Z}_c)^2}$$

$$\mathbf{Z}_1\mathbf{Z}_2 + \mathbf{Z}_2\mathbf{Z}_3 + \mathbf{Z}_3\mathbf{Z}_1 = \frac{\mathbf{Z}_a\mathbf{Z}_b\mathbf{Z}_c}{\mathbf{Z}_a + \mathbf{Z}_b + \mathbf{Z}_c} \tag{8}$$

Dividing (8) by each of (5), (6), and (7),

www.konkur.in

$$\mathbf{Z}_a = \frac{\mathbf{Z}_1\mathbf{Z}_2 + \mathbf{Z}_2\mathbf{Z}_3 + \mathbf{Z}_3\mathbf{Z}_1}{\mathbf{Z}_1}$$

$$\mathbf{Z}_b = \frac{\mathbf{Z}_1\mathbf{Z}_2 + \mathbf{Z}_2\mathbf{Z}_3 + \mathbf{Z}_3\mathbf{Z}_1}{\mathbf{Z}_3}$$

$$\mathbf{Z}_c = \frac{\mathbf{Z}_1\mathbf{Z}_2 + \mathbf{Z}_2\mathbf{Z}_3 + \mathbf{Z}_3\mathbf{Z}_1}{\mathbf{Z}_2}$$

as required. Note that the formulas above are not exactly the same as those in Chapter 9 because the locations of $\mathbf{Z}_b$ and $\mathbf{Z}_c$ are interchanged in Fig. 18.122.

www.konkur.in

Below are answers for the Network Analysis Tutorials. Some of the tutorial pages have random parameters. For these pages, there are no fixed right answers, and formulas are provided instead.

Introductory Tutorial (Tut22)

1. Orange
2. 12
3. 3.14159

The Physics of Electricity (Tut1A)

1. 36000
2. 32.04
3. 60
4. 4.32
5. 18000

Basic Elements and Circuit Laws (Tut1)

1. 3
2. -2
3. 50
4. 50
5. -60
6. Answerless page

Resistors in Series and Parallel (Tut2)

1. 4
2. 1
3. 10
4. 17
5. 11
6. Formula: R1×R2/(R1 + R2) + (R3 + R4)×R5/(R3 + R4 + R5) + R7

Voltage Dividers and Current Dividers (Tut2A)

1. 40
2. 160
3. 12
4. 20

Circuit Solving with Kirchhoff's Laws (Tut3)

1. 3
2. 2
3. 3
4. 5
5. 4
6. 6
7. I6
8. V9

www.konkur.in

9. Answerless page

The Node Voltage Method (Tut4)

1. a
2. g
3. -6
4. 5
5. 4
6. g
7. 9
8. Ve
9. 0
10. Answerless page
11. -2
12. 4
13. Answerless page
14. I4
15. I4
16. Answerless page

The Mesh Current Method (Tut5)

1. c
2. -2
3. -4
4. -2
5. Ib
6. 3A
7. Ia
8. Answerless page
9. 5

Thevenin Laboratory (Tut6)

1. Formula: 1000×Voc×Vr/[R×(Voc - Vr)]

Maximum Power Transfer (DC) (Tut6A)

1. Formula: R2×R3/(R2 + R3)
2. Formula: E×R3/(R2 + R3)
3. Formula: VT^2/(4×RT) where VT = E×R3/(R2 + R3)

Superposition (Tut6B)

1. 2
2. 5
3. -3
4. 4

Inductors and Capacitors (Tut7)

www.konkur.in

1. 0.8
2. 0.2
3. 0
4. 12t
5. -20e-4t
6. 16cos(8t)
7. -80
8. 9.79992
9. 3t
10. 2t3
11. -1.25e-4t
12. -0.25cos[8t]
13. 1.5
14. 29.532
15. Answerless page

First Order Systems (Tut8)

1. 0
2. 0
3. 120
4. 600
5. 120
6. 34.016
7. 0
8. 0
9. 90
10. 450
11. 0.45
12. -200
13. -200
14. 40
15. 450
16. 240
17. Answerless page

Second Order Systems (Tut9)

1. 0
2. 0
3. -80
4. capacitor
5. 80
6. 20000
7. 0
8. series
9. 6000
10. 5000

www.konkur.in

11. over
12. -2683
13. A1
14. -A2
15. s
16. 3.0148
17. 188
18. 1.297
19. Answerless page

The Properties of Sinusoids (Tut10)

1. 86
2. -170
3. 220
4. 23.4
5. -220
6. 440
7. 0
8. 155.6
9. -67
10. 50
11. 7.958
12. 125.7
13. 24.2

Root-mean-square (Tut10A)

1. 212
2. 50
3. 40
4. 0
5. 3
6. 10
7. 2500
8. 0
9. 5
10. -150
11. 25000
12. 450000
13. 900000
14. 466667
15. 32.27

Complex Numbers (Tut10B)

1. -1
2. -1
3. -j

www.konkur.in

4. 85.9
5. 383
6. 321
7. 655
8. -459
9. 85
10. -47.86
11. 138
12. 141.5
13. 92
14. 35
15. -15
16. 73
17. 17.0
18. 14.13
19. Formula: The equation is in the form $M\underline{/\theta} = (-5 + jA)(B\underline{/-152°}) - (C - j100)/(2\underline{/D°})$. The answer is
    $\sqrt{(X^2 + Y^2)}$where

$X = \sqrt{(5^2 + A^2)}\times B\times\cos[\arctan(-A/5) + 28°] - (\sqrt{(C^2 + 100^2)}/2)\times\cos[\arctan(-100/C) - D]$
$Y = \sqrt{(5^2 + A^2)}\times B\times\sin[\arctan(-A/5) + 28°] - (\sqrt{(C^2 + 100^2)}/2)\times\sin[\arctan(-100/C) - D]$

AC Circuits (Tut11)

1. 98
2. 120
3. 140
4. -125
5. 25
6. 30
7. 14.97
8. 200

AC Power (Tut12)

1. 378
2. 466
3. 441
4. B
5. 0
6. 466
7. 578
8. .779
9. 3373
10. D
11. B
12. 166
13. 2732

www.konkur.in

Maximum Power Transfer (AC) (Tut12A)

1. Formula: $|Z1|^2 \times R/(R^2 + |Z1|^2)$
2. Formula: $-(R^2 \times |Z1| - R^2 \times |Z2| - |Z1|^2 \times |Z2|)/(R^2 + |Z1|^2)$
3. Formula: $|E| \times R/\sqrt{R^2 + |Z1|^2}$
4. Formula: Divide the result from page 3 by twice the result from page 1.
5. Formula: Square the result from page 4 and multiply by the result from page 1.

Balanced Three-Phase Circuits (Tut13)

1. 133.3
2. 866
3. 866
4. 173.2
5. 200
6. 346.4
7. 400